Construction Documentation Report
Ash Pond Closure

Ames Steam Electric Plant
1000 East 13th Street
Ames, Iowa 50010

Prepared for:

Ames Municipal Electric System
502 Carroll Avenue
Ames, Iowa 50010

SCS ENGINEERS

27219356.02 | December 2025

1690 All-State Court, Suite 100
West Des Moines, IA 50265
515-631-6160

Table of Contents

Section Page

Certification page vi
1.0 Introduction 1
1.1 Purpose and Scope 1
1.2 Background 1
1.3 Summary of Work 2
1.4 Roles and Responsibilities 2
2.0 Deviations from Approved Plan 4
3.0 Field Modifications 5
3.1 Ash Contact Water Collection System 5
3.1.1 Contact Water Collection Pipe Elevations 5
3.1.2 Contact Water Collection Pipe Cleanout Risers 5
3.2 Separation Berm 5
3.3 Ash Excavation and Consolidation 5
3.3.1 Ash Encountered Outside of Ash Pond Limits 5
3.3.2 General Fill Placement on East Pond Area Side Slopes 6
3.4 Closure Area 6
3.4.1 Closure Area Final Cover Grades 6
3.4.2 Closure Area Extents, Southeast Corner 6
3.5 Stormwater drainage infrastructure 6
3.5.1 Stormwater Pipe Material 6
3.5.2 Flap Gate 6
4.0 General Preconstruction Activities 6
4.1 Surveying Benchmarks and Site Calibration 7
4.2 Clearing and Grubbing 7
4.3 Erosion Controls 7
4.3.1 Installation 7
4.3.2 Inspection 7
5.0 Demolition and Removal 7
5.1 Demolition by JB Holland 7
5.2 Demolition by Others 7
6.0 Closure Area Construction 8
6.1 Dewatering and Impoundment Stabilization 8
6.1.1 Surface Water Dewatering 8
6.2 Ash Contact Water Collection System 8
6.2.1 Contact Water Collection Pipe Installation 8
6.2.2 Contact Water Pumping Area 9
6.2.3 Contact Water Collection Pipe Cleanouts 9
6.2.4 Contact Water Collection Riser Pipe and Vault 9
6.2.5 Contact Water Forcemain 9
6.3 Material Consolidation and Subgrade Preparation 9
6.3.1 Ash Material Excavation and Relocation 9

6.3.2 Consolidation and Moisture Conditioning 10
6.4 Separation berm 10
6.4.1 Separation Berm Compacted Clay Fill Placement 11
6.4.2 Separation Berm Compacted Clay Liner Placement 11
6.4.3 Separation Berm Moisture and Density Testing 11
6.4.4 Separation Berm Sampling and Testing Results 11
6.4.5 Separation Berm Survey Documentation 12
7.0 Final Cover System 12
7.1 Subgrade Preparation 12
7.2 Geosynthetic Cover Components 12
7.2.1 Subgrade Surface Acceptance 12
7.2.2 Geomembrane Cover Placement 13
7.2.3 Geomembrane Seaming 13
7.2.4 Geomembrane Sampling and Testing Results 13
7.2.5 Geocomposite Placement 14
7.2.6 Geosynthetic Penetrations 14
7.3 Soil Cover Components 14
7.3.1 Protective Soil Layer Sampling and Testing 14
7.3.2 Protective Cover Soil Placement 15
7.3.3 Topsoil Placement and Testing 15
7.3.4 Soil Thickness Documentation 15
8.0 Perimeter Access Roads 15
9.0 Surface Water Management Features 16
9.1 Final Cover Drainage 16
9.1.1 Final Cover Perimeter Swale and Diversion Berm 16
9.1.2 Culverts and Structures 16
9.1.3 Rock Chutes, Aprons, and Emergency Spillways 17
10.0 Site Restoration 17

Tables

Table 1. Contact Water Collection System Pipe Grades
Table 2. Separation Berm Clay Liner Grade Table
Table 3. Separation Berm Field Moisture and Density Test Results
Table 3.1 Nuclear Density Gauge Calibration
Table 4. Clay Soil Laboratory Test Results
Table 5. Separation Berm Clay Liner In-Situ Sample Laboratory Test Results
Table 6. Closure Area Final Cover Grade Table

Figures

Figure 1. Separation Berm Clay Fill Testing Locations – Lifts 1 through 22
Figure 2. Separation Berm Clay Liner Testing and Sampling Locations – Lifts 1 through 6
Figure 3. Separation Berm Clay Liner Thickness Verification Points
Figure 4. Final Cover Thickness Verification Survey Grid

Appendices

Appendix A	Correspondence, Permits, and Change Orders
A.1	City of Ames and IDNR Correspondence
A.2	Permits
A.3	Change Orders
Appendix B	Photo Documentation
Appendix C	Daily Activities Logs
Appendix D	Updated Slope Stability Model
Appendix E	General Fill, Separation Berm Clay Fill, and Clay Liner Laboratory Test Results
E.1	Clay Fill and General Fill Source Test Results
E.2	Clay Fill Representative Sample Test Results
E.3	Clay Liner Source Test Results
E.4	Clay Liner Representative Sample Test Results
E.5	Undisturbed In-Situ Sample Test Results (Shelby Tubes)
E.6	General Fill Representative Sample Test Results
Appendix F	Granular Material Laboratory Test Results
Appendix G	Geosynthetic Materials Manufacturer's Quality Control Data
G.1	Geomembrane
G.2	Geocomposite
G.3	Geotextile
Appendix H	Geosynthetic Materials Conformance Test Results
H.1	Conformance Test Results
H.2	Interface Friction Test Results
Appendix I	Geosynthetic Materials Installation Documentation
I.1	Geosynthetic Preinstallation Meeting
I.2	Subgrade Acceptance Forms
I.3	Geomembrane Panel Map
I.4	Project Information
I.5	Material Inventory Record
I.6	Geosynthetic Panel Placement Record
I.7	Trial Weld Record
I.8	Seam/Non-Destructive Test Record
I.9	Additional Non-Destructive Test Record
I.10	Repair Record
I.11	Destructive Test Record
I.12	Destructive Seam Laboratory Testing
I.13	Tensiometer Calibration Certificate
Appendix J	Geosynthetic Installer Documentation and Warranty
Appendix K	Cover Protective Soil and Topsoil Laboratory Test Results
K.1	Source Test Results
K.2	Representative Sample Test Results
Appendix L	HDPE Pipe, Stormwater Structures, and Vault Manufacturer's Information
Appendix M	Restoration Material Manufacturer's Information
Appendix N	Deed Notation
Appendix O	Survey Monument Documentation

Drawing List

Drawing C0.0 Cover
Drawing C1.0 Preconstruction Conditions
Drawing C2.0 Site Preparation and Demolition
Drawing C3.0 Documented Excavation
Drawing C3.1 Documented Separation Berm Grades
Drawing C3.2 Documented Top of Ash Grades
Drawing C3.3 Documented Final Grades
Drawing C3.5 Cross Sections
Drawing C3.6 Cross Sections
Drawing C4.0 Surface Stormwater Controls
Drawing C4.1 Subsurface Stormwater Controls
Drawing C4.2 Documented Restoration
Drawing C5.0 Details
Drawing C5.4 Details
Drawing C5.5 Details
Drawing C5.6 Details
Drawing C5.7 Details
Drawing C5.8 Details
Drawing C5.9 Details
Drawing C5.10 Details
Drawing C5.11 Details
Drawing C5.12 Details

G:\Project\27219356.02\Construction Documentation Report\20251120_Ames Ash Pond Construction Documentation Report_Ash Pond Closure_FINAL.docx

CERTIFICATION PAGE

Mark R. Huber, a licensed Professional Engineer in the State of Iowa, has overseen the performance of the quality assurance observation and testing program during the Ash Pond Closure at the Ames Municipal Electric System Steam Electric Plant. Based upon the information presented within this report, SCS Engineers has observed that the Ash Pond has been closed in compliance with the approved Closure Plan, CQA Plan, Final Drawings, and Sanitary Disposal Project Closure Permit Number 85-SDP-20-23C (pursuant to 40 CFR 257.102(f)(3)). The following items have been accomplished in general accordance with the project documents:

- Installation of the ash contact water collection system.
- Separation berm construction.
- Surface water dewatering and subgrade stabilization to sufficiently support the Closure Area final cover system.
- Consolidation of ash, and ash-impacted soil from the eastern section of the Ash Pond to the Closure Area in the western section of the Ash Pond.
- General fill placement and subgrade preparation outside closure areas.
- Perimeter drainage swale construction.
- Forty-mil textured linear low-density polyethylene (LLDPE) geomembrane installation.
- Drainage geocomposite installation.
- Eighteen-inch protective soil cover installation.
- Six-inch topsoil placement.
- Storm water infrastructure installation (stormwater pipes, flared end sections, area intake, toe drain, rock chutes/aprons, diversion berms).
- Seeding and restoration.

Our professional services have been provided using the level of care and skill ordinarily exercised, under similar circumstances, by engineering professionals currently practicing in this locality. No other representation, express or implied, and no warranty or guarantee is included or intended.

Respectfully Submitted,

SCS ENGINEERS



12/16/2025

I hereby certify that this engineering document was prepared by me or under my direct personal supervision and that I am a duly licensed Professional Engineer under the laws of the State of Iowa.

Mark R. Huber, PE December 16, 2025

Iowa License No. 15325

My license renewal date is: 12/31/2025

Pages or Drawings covered by this seal: Construction Documentation Report Ash Pond Closure at the Ames Steam Electric Plant.

1.0 INTRODUCTION

1.1 PURPOSE AND SCOPE

This Construction Documentation Report for the Ash Pond Closure at the Ames Steam Electric Plant has been prepared by SCS Engineers (SCS) on behalf of the City of Ames (City) Municipal Electric System to certify that the closure construction has been implemented in compliance with the following:

- Sanitary Disposal Project Closure Permit Number 85-SDP-20-23C issued by the Iowa Department of Natural Resources (IDNR) on January 5. 2024.
- Closure Plan prepared by SCS dated August 17, 2023.
- Issued for Permitting Drawings prepared by SCS dated August 2023.
- Issued for Construction Ash Pond Closure Drawings prepared by SCS dated June 2024.
- Coverage under IDNR National Pollutant Discharge Elimination System (NPDES) General Permit No. 2 IA–44472-44065 for Storm Water Discharge Associated with Construction Activities effective May 28, 2024, to May 28, 2027.
- Wastewater Construction permit No. 2024-0078S issued by the IDNR on September 6, 2023.
- Construction Quality Assurance / Quality Control Plan for the Ames Municipal Electric System Ash Pond Closure and Refuse Derived Fuel (RDF) Pond Construction, dated November 2023 (CQA Plan).

This report includes closure of the Ash Pond, along with additional ash impacted soils; and provides a record of observations, test results, and documentation survey data related to activities for construction of the surface impoundment closure areas and supporting infrastructure. It is intended to support certification of the Ash Pond Closure pursuant to 40 CFR 257.102(f)(3).

The results of surveying, field testing, and laboratory testing conducted by SCS, or by third-party laboratories on behalf of SCS, are summarized in **Tables 1** through **6**. The location of samples collected and field tests completed to document the closure construction are shown on **Figures 1** through **4**. **Drawings C0.0** through **C5.12** accompany this report to document constructed conditions. **Appendices A** through **N** include supporting information such as correspondence, construction material testing results, and field observations. Copies of construction-related correspondence and approval letters are presented in **Appendix A**. Photographs of various construction activities are included in **Appendix B**. The daily log of construction activities is included in **Appendix C**.

1.2 BACKGROUND

The City of Ames Steam Electric Plant (Plant) is located at 200 East 5th Street, in Ames, Iowa. From 1982 until October 18, 2015, the City of Ames Steam Electric Plant disposed their coal combustion residuals (CCR) materials in a single surface impoundment (Ash Pond) located approximately 3,000 feet northeast of the generating station in Section 1, Township 83 North, Range 24 West. After October 19, 2015, the Plant continued to place ash generated from the use of RDF process into the Ash Pond until April 11, 2021. The ash was transported (sluiced) from the Plant and discharged into the Ash Pond to allow time for the ash to settle out. Water from the Ash Pond flowed into an outlet structure that connected the Ash Pond with a set of Clearwater Ponds. On April 11, 2021, that process was altered so that the RDF sluice pipe is routed directly into the East Clearwater Pond and

no water (other than precipitation) is introduced into the Ash Pond. This change was prompted by regulation 40 CFR §257.101(b)(1)(i).

The approximately 9.6-acre Ash Pond is located east of and adjacent to the City of Ames Water Treatment Plant's Lime Ponds. The impoundment is approximately 900 feet in length in the east-west direction and a maximum of 675 feet in length in the north-south direction.

The location of the project site is shown on **Drawing C0.0**. The pre-construction site conditions and site preparation of the project area are shown on **Drawings C1.0** and **C2.0**.

1.3 SUMMARY OF WORK

Closure of the Ash Pond included the following tasks:

- Installing and maintaining erosion control measures.
- Installing the ash contact water collection system in the Closure Area.
- Constructing the separation berm, clay liner, and access road on the east side of the Closure Area.
- Bulk excavation of ash and ash-impacted soils from the eastern section of the ash pond as well as to the south and west of the Closure Area where ash was located beyond the originally anticipated extents.
- Moisture conditioning and consolidating ash in the designated Closure Area.
- Placing, grading, and compacting the grading layer in the Closure Area for installation of the final cover system.
- Installing the LLDPE geomembrane in the Closure Area.
- Installing the drainage geocomposite over the geomembrane.
- Installing the toe drain and associated outlets along the perimeter of the Closure Area.
- Installing the final cover 18-inch protective soil layer.
- Installing the final cover 6-inch topsoil layer.
- Installing storm water drainage features including ditches, diversion berms, etc.
- Installing the contact water collection vault, pump, control panel, and forcemain.
- Temporary seeding and restoration.
- Seeding and restoration.

Excavation of material for placement in the Closure Area occurred in 2024 and 2025. The consolidation of materials into the Closure Area was completed in May 2025. The final cover construction work for the Closure Area started with geosynthetic installation in May 2025, cover soil was placed in June 2025, and vegetative restoration was finished in August 2025. Closure of the Ash Pond was substantially completed in August 2025. The site plan with post-construction site conditions is shown on **Drawing C3.3**.

1.4 ROLES AND RESPONSIBILITIES

Several parties were involved with the closure construction. Each party and their role are described below.

City– As the owner of the facility the City was responsible for maintaining compliance with State and Federal regulations during closure activities. The City selected the parties charged with implementing the design, CQA, and construction activities. The City had the authority to accept or reject drawings and specifications, CQA Plans, reports and recommendations of the CQA Officer and Engineer, and

the materials and workmanship of the construction contractor. The City is responsible for the continued maintenance of the facility after closure.

Subcontractors that assisted the City with construction tasks include the following:

- **Snyder and Associates:** Performed the pre-construction topographic survey.

SCS Engineers of West Des Moines, Iowa – As the engineer for the project SCS was responsible for the design of the closure meeting the requirements of the IDNR-issued closure permit and 40 CFR 257.102. SCS was responsible for revising component design to meet unexpected site conditions or as changes in construction methods were required. SCS was responsible for specification of corrective measures where there were deviations from the drawings and specifications. SCS was responsible for management of CQA documentation including reviewing the field testing, measurements, and laboratory analysis. In addition, SCS attended construction progress meetings, reviewed product submittal information provided by the construction contractor, and responded to inquiries raised by the construction contractor. SCS was responsible for verifying the final work product conformed to applicable closure permit, drawings, specifications, and CQA Plan.

SCS coordinated with the construction contractor to implement CQA Plan activities. Other responsibilities included:

- Preparation of daily reports.
- On-site observation during construction.
- Survey documentation of the ash contact water collection system, separation berm, excavation grades, final cover systems, stormwater drainage infrastructure, and final site conditions.
- Offering recommendations for corrective actions when necessary.
- Photographic documentation.

Subcontractors that assisted SCS with construction tasks include the following:

- **Team Services, Inc. of Des Moines, Iowa:** Provided geotechnical laboratory testing throughout the project.

- **TRI Environmental**: Provided laboratory testing of LLDPE geomembrane and drainage geocomposite.

Mr. Christopher Calhoun of SCS acted as the primary Resident Project Representative (RPR) and provided the majority of on-site construction documentation and oversight throughout the project. Oversight was provided during ash contact water collection system installation, separation berm construction, material excavation and consolidation, fill placement, subgrade preparation, and final cover system construction. Mr. Isaac Creech (SCS), Mr. Brandon Suchomel (SCS), and Mr. Matthew Kuhlenengel (SCS) also provided assistance with oversight and project documentation, as needed. This combination of personnel provided on-site construction observation during the duration of closure construction activities.

JB Holland Construction of Decorah, Iowa – Construction contractor for the Ash Pond closure. JB Holland (Contractor) was responsible for performing the construction and installation work in accordance with the IDNR closure permit, IDNR construction permit, design drawings, CQA Plan, and

specification requirements. Work performed by JB Holland included but was not limited to the following:

- Site preparation and erosion control installation, inspection, and maintenance.
- Removal or abandonment of above-ground and below-grade piping.
- Installation of the ash contact water collection system.
- Construction dewatering and continued site maintenance.
- Ash material excavation from the east section of the ash pond, as well as other areas of located ash outside the designated Closure Area.
- Placement, consolidation, grading, and compaction of ash material in the Closure Area.
- Backfilling excavated side slopes of the ash pond with general fill to improve slope stability adjacent to the perimeter access road.
- Closure Area final cover subgrade preparation.
- Closure Area final cover protective soil layer and topsoil placement.
- Storm water management infrastructure installation.
- Survey documentation.
- Construction progress meetings.

Several subcontractors and vendors assisted JB Holland with specific activities during the project. Each subcontractor and the work performed are listed below:

- **Clean Air and Water Systems, LLC:** Installation of the Closure Area LLDPE geomembrane and drainage geocomposite.

- **Teams Services, Inc. of Des Moines, Iowa:** Provided geotechnical laboratory testing throughout the project.

- **TRI Environmental:** Provided laboratory testing of LLDPE geomembrane and drainage geocomposite.

- **Absolute Group:** Performed seeding of the Closure Area and other disturbed areas. Installed erosion and sediment control for site stabilization.

2.0 DEVIATIONS FROM APPROVED PLAN

Deviations from the approved Closure Plan occurring during the Ash Pond Closure project are described below:

- The interface friction testing requirements were changed to 21 degrees and no adhesion for both the grading layer to geomembrane and geomembrane to geocomposite interfaces. This was determined using SLOPE/W slope stability analysis. These results are shown in **Appendix D**.

- Ash was identified beyond the extent initially anticipated. This ash was excavated and placed in the Closure Area.

- Ash was allowed as the grading layer below the geomembrane, as it met the specifications for the grading layer, including the minimum interface friction angle. These results are shown in **Appendix H**.

- A separate grading layer between the ash and the geomembrane was not used, a thickness survey was not performed. The other CQA elements of the grading layer still applied to the uppermost 6-inches of placed ash. The top of ash (bottom of geomembrane) surface is shown on **Drawing 3.2**.
- Double hydrometer testing was used in place of Hydraulic Conductivity Ratio testing to determine the likelihood of the cover soils clogging the geotextile portion of the geocomposite. See **Section 7.3.1** for details discussing the testing substitution. The results of the testing are shown in **Appendix K**.

3.0 FIELD MODIFICATIONS

Field changes or modifications were made to construction items after they were reviewed by the City and approved by SCS for more effective implementation and better results. The sections below describe field modifications that were executed during the project.

3.1 ASH CONTACT WATER COLLECTION SYSTEM

3.1.1 Contact Water Collection Pipe Elevations

Pipe flowline elevations were adjusted in the northeast corner of the contact water collection system due to the Contractor encountering the existing Ash Pond clay liner at higher than anticipated elevations. Documented pipe elevations for the contact water collection system are shown on **Table 1**.

3.1.2 Contact Water Collection Pipe Cleanout Risers

The cleanout riser pipes in the northwest, northeast, and southwest corners of the Closure Area were extended and installed through the final cover with pipe boots to avoid conflicts with the perimeter drainage features. The modified cleanout geometry can be seen in **Detail 5, Drawing C5.12**.

3.2 SEPARATION BERM

Based on the test results from the borrow source provided by the Contractor prior to construction, a clayey sand (USCS soil type SC) was allowed to be used as the clay fill of the Separation Berm. The soil analysis for the borrow source is shown in **Appendix E**. There was no exception made for the clay liner portion of the separation berm, it was constructed using lean clay (USCS soil type CL).

3.3 ASH EXCAVATION AND CONSOLIDATION

3.3.1 Ash Encountered Outside of Ash Pond Limits

During excavation, ash material was encountered outside of what was assumed to be the original Ash Pond limits. Ash that was observed beyond those limits was excavated and moved to the Closure Area under the final cover system. The limits of the existing Ash Pond extended to the south and to the west more than anticipated, including below existing access roads. The extents of excavation are shown on **Drawing C3.0**.

3.3.2 General Fill Placement on East Pond Area Side Slopes

After excavation of ash and ash-impacted soils from the side slopes in the eastern section of the Ash Pond, excavation grades were steeper than 3:1 slopes. General fill soil was placed in these areas to establish 3:1 slopes and to improve slope stability adjacent to the perimeter access road.

3.4 CLOSURE AREA

3.4.1 Closure Area Final Cover Grades

The final cover grades were altered to accommodate the actual fill material volume encountered and the reduction in excavated material volume caused by consolidation of the ash materials. The crown and most of the closure area side slopes were adjusted to a single 10:1 slope from 20:1 and 4:1 slopes, respectively. The perimeter side slope (approximately 40 feet) of the final cover area were adjusted to a 4:1 slope with a small section of 2:1 slopes associated with the perimeter swale. The final height of the Closure Area is approximately half of what was shown on the approved Closure Plan. The approved closure plan addressed changes in grades due to actual filling volumes. From the closure plan, "Side slopes can be flattened or steepened, but will not be steepened in excess of 4H:1V or flattened to less than 5 percent without additional discussion with IDNR (i.e., amendment of the closure permit)." The final slope was within the approved range. The final geometry is shown on Detail 1, Drawing C5.4.

3.4.2 Closure Area Extents, Southeast Corner

A pipe conflict between the contact water collection system riser pipe, the final cover toe drain, and the stormwater swale/south stormwater pipe was identified in the southeast corner of the Closure Area. The Closure Area extents were moved north in this corner, reducing the overall footprint. This provided enough space for the pipes to move past each other and resolve the conflict. The final geometry is shown on Detail 4, Drawing C5.10.

3.5 STORMWATER DRAINAGE INFRASTRUCTURE

3.5.1 Stormwater Pipe Material

Stormwater pipes from the Closure Area into the remaining pond were changed to corrugated polyethylene pipes (CPEP) from high-density polyethylene (HDPE) due to the removal of the HDPE geomembrane from the final design of what was originally planned to be the RDF Ash Pond area.

3.5.2 Flap Gate

A flap gate originally shown on the detail for a stormwater pipe extending from the Closure Area to the eastern section of the remaining pond was removed because it was not needed.

4.0 GENERAL PRECONSTRUCTION ACTIVITIES

JB Holland and SCS implemented various activities before starting major construction items for the project. The preconstruction activities are described in the following sections.

4.1 SURVEYING BENCHMARKS AND SITE CALIBRATION

The project site included multiple existing permanent control points and benchmarks. The locations of site control points and benchmarks are shown and listed in a table on **Drawing C1.0.** Permanent benchmarks used for the Ash Pond closure work included locations CP-1, CP-2, CP-3, and CP-4. Documentation surveying was completed by SCS utilizing the Iowa Real-Time Network (IaRTN).

4.2 CLEARING AND GRUBBING

Clearing and grubbing throughout the closure construction area was performed by JB Holland as necessary. JB Holland cleared several dump truck loads of woody vegetation from the Ash Pond and disposed of it off-site.

4.3 EROSION CONTROLS

Erosion control measures were installed and inspected per the Construction Storm Water Pollution Prevention Plan and NPDES General Permit No. 2 (GP2) for storm water associated with construction activities.

4.3.1 Installation

On June 5, 2022, JB Holland installed perimeter silt fence along the west, north, and east sides of the site. Perimeter silt fence was installed at the locations identified on **Drawing C2.0**. The erosion controls were supplemented or repaired, as needed, throughout the project.

4.3.2 Inspection

Inspections of the erosion controls were performed by JB Holland and City staff. Inspections were performed a minimum of every 7 days throughout construction. Issues or deficiencies identified during the inspections were addressed. Inspections and associated reports will be completed until vegetation is established as required in GP2.

5.0 DEMOLITION AND REMOVAL

5.1 DEMOLITION BY JB HOLLAND

JB Holland performed demolition and removal activities of specific structures as they were encountered during construction. Demolition of structures or piping not associated with or in the immediate vicinity of the Ash Pond were not observed by SCS and are not the subject of this report.

Demolished and removed items are described below and shown on **Drawing C2.0**:

- Existing piping in the Ash Pond was removed and disposed of off-site.
- A large portion of the existing concrete pad (between the Ash Pond and East Clearwater Pond) was removed and placed into the Closure Area.

5.2 DEMOLITION BY OTHERS

The existing pad mounted electrical transformer that was located directly south of the existing Ash Pond was removed by the City.

6.0 CLOSURE AREA CONSTRUCTION

The Closure of the Ash Pond and Closure Area construction involved the following:

- Dewatering to remove free liquids and stabilize remaining ash.
- Ash contact water collection system installation.
- Separation berm construction.
- Consolidation and moisture conditioning of ash and ash-impacted soil (ash materials).
- Placement and compaction of ash materials.
- Subgrade stabilization to sufficiently support the final cover system.
- Final cover construction consisting of 40-mil textured LLDPE geomembrane, drainage geocomposite, 18 inches of protective soil cover, and 6 inches of vegetated topsoil cover.
- Surface stormwater management feature construction.
- Subsurface stormwater control installation.
- Site restoration.

Construction activities were performed in substantial conformance with the project documents and approved Closure Plan.

6.1 DEWATERING AND IMPOUNDMENT STABILIZATION

6.1.1 Surface Water Dewatering

JB Holland removed ash contact water and free liquids from the Ash Pond starting in 2024 and continued to dewater the pond throughout construction activities as precipitation and ash disturbance generated additional ash contact water. Dewatering primarily consisted of decanting free water and utilizing ditches and pumping from sumps within the Ash Pond. Ash contact water was pumped to the East Clearwater Pond located west of the existing Ash Pond outlet structure and south of the separation berm.

6.2 ASH CONTACT WATER COLLECTION SYSTEM

6.2.1 Contact Water Collection Pipe Installation

The contact water collection piping consisted of 6-inch diameter, perforated SDR 17 HDPE pipe, with 5/8-inch perforations as shown on **Detail 3, Drawing C5.10**. The contact water collection sump pipe consisted of 18-inch-diameter, perforated SDR 17 HDPE pipe with 5/8-inch perforations, as shown on **Detail 3, Drawing C5.10.** Prior to installation of the contact water collection piping or surrounding aggregate, a geotextile filter (Solmax MIRAFI 140NL) was placed in an approximately 2-foot by 2-foot trench. After the geotextile was installed, a minimum of 4 inches of drainage aggregate was placed using an excavator.

The pipe sections were fusion welded in the field. The fused pipe was lowered onto the previously placed aggregate. The elevation and location of installed pipe was surveyed for documentation purposes. Survey information is summarized in **Table 1**. After the contact water collection piping was installed, drainage aggregate was placed around the piping to approximately 12 inches above the pipe. After the drainage aggregate was placed, the geotextile filter was overlapped over the top of the trench to fully encapsulate the pipe and drainage aggregate. One foot of sand was placed over the top of the geotextile.

6.2.2 Contact Water Pumping Area

In the southeast corner of the Closure Area, an approximately 45-foot by 50-foot pit was excavated down to the existing clay liner for the contact water pumping area. The excavation of the pumping area occurred alongside the installation of the perforated collection pipe. Once excavated, 4-inches of drainage aggregate was placed in the bottom of the pumping area. The perforated collection pipes were extended into the pumping area and cleanout pipes were welded to the collection pipes. The 18-inch perforated sump pipe was fusion welded to the 18-inch solid HDPE riser pipe and placed in the storage area. After placement of the pipes, an additional approximately 2 feet of drainage aggregate was placed in the contact water pumping area. A geotextile filter was placed over the drainage aggregate. The contact water pumping area is shown on **Drawing C3.0** and on **Detail 1, Drawing C5.10**.

6.2.3 Contact Water Collection Pipe Cleanouts

The perforated contact water collection piping was fitted with dual direction cleanouts at the locations shown on **Drawing C3.0,** and as shown on **Detail 3, Drawing C5.11**. Two ends of a 6-inch HDPE cross were fusion welded to the perforated pipe sections, while the other two ends were fusion welded to 6-inch-diameter, non-perforated SDR 17 HDPE cleanout risers. Minor changes to the cleanout riser geometry are indicated in **Section 3.1.2.**

6.2.4 Contact Water Collection Riser Pipe and Vault

The end of the contact water collection system is an 18-inch riser pipe and vault containing the pump and other accessories associated with the contact water forcemain. The riser pipe has a 40-foot horizontal section of perforated pipe located in the contact water pumping area and containing the pump and discharge pipe for the forcemain. The riser pipe was then placed up the south side slope of the Closure Area and into the vault via a pipe boot. The vault houses the required junction boxes and other forcemain accessories. The riser pipe and vault were installed according to **Details 1, 2, & 4, Drawing C5.10**.

6.2.5 Contact Water Forcemain

The start of the contact water forcemain is the EPG pump within the bottom, horizontal section of the riser pipe. A flexible HDPE pipe then brings the water up to the vault, where there is a transition from HDPE to polyvinyl chloride (PVC) pipe via a pitless adaptor. The vault houses a variety of accessories including a flow meter, air-vac valve, and access port. The forcemain then transitions from PVC back to HDPE, exits the bottom of the vault underground and is pumped to the discharge point, following the alignment and profile shown on **Drawing C3.2**.

6.3 MATERIAL CONSOLIDATION AND SUBGRADE PREPARATION

6.3.1 Ash Material Excavation and Relocation

JB Holland began ash excavation on the south end of the east section (adjacent to the Closure Area) of the Ash Pond working toward the north. JB Holland constructed temporary haul roads across the pond to facilitate ash removal and hauling. An SCS on-site representative observed the ash excavation and visually observed that ash was removed to the limits of the existing pond clay liner, including portions of the clay liner that appeared to be impacted by the ash. The depth of the excavation ranged from a few feet to approximately thirty-five feet, with an average depth of approximately eight feet. The excavation grades are shown on **Drawing C3.0**.

6.3.2 Consolidation and Moisture Conditioning

Material consolidation and filling to final cover subgrades began in June 2024 and was substantially completed by May 2025. Material consolidation in the Closure Area consisted of the excavated ash materials from the east section of the Ash Pond and ash currently located within the Closure Area.

Fill materials were placed in the Closure Area in loose lifts not exceeding 12 inches in thickness. Lifts were graded with a dozer and compacted using a self-propelled compactor. Compaction was conducted by visual inspection during proof rolling each lift in accordance with the project requirements. Proof roll tests were observed by SCS.

Wet or inadequately compacted ash material was reworked by JB Holland to achieve an adequate level of compaction. Wet ash was reworked by discing and allowing the material to dry. Several months into the project, it was recognized that additional methods for achieving stabilization were required to expedite the consolidation process. JB Holland utilized a Portland cement amendment on an as-needed basis to condition wet ash material after placement. The Portland cement amendment was performed by spreading the cement across a lift of wet ash material with a Stoltz Site Spreader and then discing the cement into the ash material. Through a combination of drying, cement addition, and compaction, the subgrade was determined to be stabilized sufficiently to support the final cover system when it was able to pass a proof roll.

At the end of the 2024 construction season, as JB Holland approached ash material along the bottom of the pond, the moisture content of the ash turned the material into a slurry when it was disturbed. Even with the addition of cement, the drying time for this material would have been extensive. It was determined by SCS that ash containment pits could be created toward the center of the Closure Area, provided the edges of the containment pits remained approximately 100 feet away from the Closure Area perimeter limits. This 100-foot buffer zone was determined by analysis of the critical slope identified in the slope stability analysis. A lift of drier ash was placed above these pits to promote positive drainage of stormwater. These pits were then allowed to sit for the winter season. At the start of the 2025 construction season, an additional ash material bridge lift was permitted above the pits. Following compaction of the bridge lift, a proof roll was performed and passed. This process was repeated once more for additional material excavated from the Ash Pond floor. Although the ash materials did not have as long to consolidate, through cement addition, placement of another bridge lift and compaction, the area above the ash containment pits was able to pass a proof roll.

A final proof roll was performed on the prepared final cover subgrade surface, primarily consisting of ash impacted soil. This surface was observed for rutting exceeding 1 inch in depth. Subgrade areas that failed proof rolling were improved by additional compaction. Subgrade areas that required additional stabilization were proof rolled after improvements were completed. See Section 7.1 for details on final subgrade work prior to deployment of geosynthetics.

6.4 SEPARATION BERM

At the same time the ash material excavation and relocation work described in Section 6.3.1 continued, JB Holland constructed a separation berm along the east side of the Closure Area to contain and stabilize the ash material placed within the Closure Area.

6.4.1 Separation Berm Compacted Clay Fill Placement

The separation berm was primarily constructed of clay soil from the Elder Corporation borrow site located on 240. The laboratory testing results for the materials used are shown in **Appendix E**. The clay was brought to the site using semi-trailer trucks, which used soil ramps to dump the soil in the approximate location of the separation berm. A bulldozer was used to distribute the clay in 8-inch loose lifts. A combination of a tow-behind sheepsfoot compactor and a self-propelled compactor were used to compact the clay to the parameters designated in the CQA Plan and described in **Section 6.4.3** below.

6.4.2 Separation Berm Compacted Clay Liner Placement

After construction of the clay fill portion of the separation berm, the clay liner was constructed on the western slope of the berm. Construction of the clay liner was performed in accordance with the CQA Plan. The clay that was used for the liner came from a single source at an Elder Corporation borrow site.

The clay was delivered to the site and placed with side dump trailers and graded with a GPS-equipped bulldozer. The clay liner was compacted using the combination of a tow-behind sheepsfoot compactor and a self-propelled sheepsfoot compactor. The clay was moisture conditioned using a standard water truck. Clay liner placement started September 4, 2024, and was completed by September 6, 2024. The documented clay liner grades are shown on **Table 2**.

The liner was placed in six, compacted 6-inch vertical lifts. A combination of a tow-behind sheepsfoot compactor and a self-propelled compactor was used to compact the clay to the parameters designated in the CQA Plan and described in **Section 6.4.3** below.

6.4.3 Separation Berm Moisture and Density Testing

Field moisture/density tests were performed on the clay liner using a nuclear density gauge (NDG). Five moisture-density tests were performed along the constructed separation berm for each lift of clay fill material. Six moisture-density tests were performed for each lift of clay liner material. Field moisture and density test locations can be found on **Figures 1** and **2**.

Field moisture/density tests were performed by SCS. Proctor curves used for NDG testing of the clay fill and liner material are contained in **Appendix E**. Clay fill and clay liner materials were required to meet 95 percent of the maximum dry density using the standard proctor method (ASTM D698). Clay fill material in the top seven lifts of the separation berm was required to have a moisture content plus or minus 2 percent of optimum. Clay liner material was required to have a moisture content 0 to 3 percent wet of optimum. Test results are provided in **Table 3**.

6.4.4 Separation Berm Sampling and Testing Results

During clay fill and clay liner placement, SCS collected bulk samples for laboratory testing. Per the requirements of the CQA Plan, one bulk sample was collected for every 5,000 cubic yards of material placed. Each bulk sample was tested for grain size, Atterberg limits, soil classification, maximum dry density, and optimum moisture content. The test results are summarized in **Table 4,** and the Lab reports are shown in **Appendix E**. After Lifts 2, 4, and 6, Shelby tubes were obtained and tested to determine the in-situ permeability characteristics of the placed clay, showing an average permeability of 2.5×10^{-8} cm/sec. The sample locations These results are summarized in **Table 5** and lab results are provided in **Appendix E**.

6.4.5 Separation Berm Survey Documentation

After JB Holland removed the ash below the separation berm footprint, SCS documented the base of the excavation with survey shots and visually confirmed ash had been removed. Placement of the clay fill and clay liner material was documented by SCS. The clay liner grades are shown on **Figure 3**. Upon achieving the designed grades for the separation berm, the finished surface was documented by SCS. The separation berm grades are shown on **Drawing C3.1**, and the cross sections are shown on **Drawings C3.5**.

7.0 FINAL COVER SYSTEM

The Closure Area final cover system consisted of the following materials (from bottom to top):

- Grading layer (consisted of compacted ash).
- Forty-mil textured linear low-density polyethylene (LLDPE) geomembrane.
- Drainage geocomposite.
- Eighteen-inch minimum protective soil layer.
- Six-inch minimum topsoil layer.

The final cover design and materials meet the federal CCR rule minimum cover criteria in 40 CFR 257.102(d)(3) as stated in the Closure Plan prepared by SCS. Installation and testing requirements for the final cover system met the requirements of the CQA Plan and specifications. The final cover area was approximately 4.7 acres.

7.1 SUBGRADE PREPARATION

Material consolidation and filling to final cover subgrades began in June 2024 and was substantially completed by May 2025.

Ash materials were placed in the Closure Area in loose lifts not exceeding 12 inches in thickness as discussed in **Section 6.3.2**. Subgrade was stabilized sufficiently to support the final cover system.

Once final cover subgrades were established, the final prepared subgrade surface was surveyed by SCS to document the subgrade elevation. Documented subgrade elevations are provided in **Table 6,** with the corresponding points shown on **Figure 4**. The final cover subgrades are shown on **Drawing C3.2.**

7.2 GEOSYNTHETIC COVER COMPONENTS

The geosynthetic cover system includes a 40 mil LLDPE geomembrane underlying a geocomposite drainage layer. Prior to delivery to the site, the materials used were documented to meet the required specifications of the CQA Plan. The manufacturer's quality control data is shown in **Appendix G**. Conformance Testing was also performed for the geomembrane and was shown to meet the required specifications. The conformance testing results are shown in **Appendix H**. Installation was documented by both Clean Air and Water Systems, LLC (CAAW) and SCS.

7.2.1 Subgrade Surface Acceptance

Prior to LLDPE installation, CAAW and SCS observed that the subgrade for the geosynthetics (top of ash) was free of significant irregularities and objects that could damage the geomembrane (e.g.,

rocks, RDF debris, etc.). Subgrade acceptability for LLDPE installation was determined daily for the deployment area of that day. The Subgrade Acceptance forms are shown in **Appendix I.2**.

7.2.2 Geomembrane Cover Placement

The LLDPE geomembrane was deployed on the Closure Area using a rubber-tracked skid steer with a spreader bar. The panels were placed in both slope directions (top-down, or bottom-up), in both cases the geomembrane was held in place and unrolled off the spreader bar by reversing the skid-steer (i.e. the geomembrane was not allowed to be dragged across the subgrade surface). Panel placement started on the north side slope and progressed to north end of the east and west side slopes. A panel width was left as exposed subgrade when deployment shifted to the south side of the Closure Area. This section remained uncovered until the geocomposite was nearly complete, as it allowed the skid-steer to traverse the slope without repeatedly running on previously placed geomembrane.

CAAW personnel cut and deployed LLDPE panels to the required dimensions, assigning each panel a unique identification number as shown on the geomembrane panel documentation drawing included in **Appendix I.3**. Panels were temporarily ballasted with sandbags as needed. The SCS and CAAW quality control inspectors observed the LLDPE geomembrane as it was deployed and marked visible defects for repair, as needed. Panel placement records are included in **Appendix I.10**.

7.2.3 Geomembrane Seaming

CAAW seamed the LLDPE geomembrane panels together using fusion (wedge) and extrusion (fillet) welding techniques. The date, welding machine number, operator, and time were recorded on the Seam Control Report. Seams were identified by adjacent panels; for example, a seam between panel 1 and 2 is designated as Seam 1/2. The Seam Control Report is included in **Appendix I.8**.

7.2.4 Geomembrane Sampling and Testing Results

Trial welds were performed for each machine, welder, and material type (textured to textured, smooth to smooth, or textured to smooth) at the beginning of the day, prior to restarting work in the afternoon after lunch, and prior to a new machine or operator being used for project seaming. The trial welds were performed in environmental conditions comparable to those in which the actual seaming would be performed. Sample coupons were then cut from the trial welds and tested for peel and shear by the CAAW QC personnel using a field tensiometer. Seams were required to achieve project specifications values for peel and shear according to the CQA Plan prior to the machine and operator seaming in the project. The Trial Weld Test Record and Tensiometer Calibration Certificate are included in **Appendix I.7** and **Appendix 1.13** respectively.

To check for seam continuity, CAAW conducted nondestructive tests on all seams, patches, and repairs as geomembrane installation progressed. For fusion welded seams, air pressure testing was used to test the integrity of the seams. The air pressure testing was performed in accordance with the CQA Plan and project specifications. For extrusion welded seams and other irregular areas, the seams were tested using the vacuum box method. The non-destructive test results are included on the Seam Control Report and the Repair Report included in **Appendix I.8** and **Appendix I.10**, respectively.

Destructive testing, used to evaluate seam strength, consisted of field and laboratory testing. A total of 21 destructive seam samples were collected from the approximately 10,074 linear feet of fusion seam installed; and 3 destructive seam samples were collected for the 1,227 linear feet of extrusion

seam installed. Each destructive sample was divided into three sections; one section was sent to TRI Environmental, Inc. by SCS for laboratory seam strength testing, one was field tested by CAAW, and the third was retained as an archive sample. The minimum strength properties required are outlined in the CQA Plan and consistent with GRI GM13. Destructive Sample Testing for field and lab testing is included in **Appendix I.11**.

7.2.5 Geocomposite Placement

Solmax FabriNet TRX 300 mil, double sided 6 oz/yd2, nonwoven geocomposite was used for this project. The majority of the geocomposite drainage layer panels were deployed by stationing the skid-steer with spreader-bar at the top of the Closure Area (using the still exposed portion of subgrade) and pulling the geocomposite down the slope across the geomembrane. This avoided unnecessary tracking of the skid-steer on the geomembrane. Once the geocomposite had been installed above the previously deployed geomembrane, the final panel of geomembrane (Panel 79) was installed. Geocomposite was then installed across this final section. The geocomposite was seamed according to the CQA Plan. Butt-seams were not allowed on the 4:1 side slope on the perimeter of the Closure Area.

7.2.6 Geosynthetic Penetrations

The contact water collection system had six locations where the cleanouts needed to penetrate the geosynthetic layers. In these locations, the geomembrane panels had holes cut for the cleanout pipes, which were later fitted with pipe boots. The pipe boots used LLDPE sleeves welded around the pipes, which were then welded to aprons, which were themselves welded to the main LLDPE panel. These pipe boots ultimately created a watertight seal. The geocomposite was cut out around the cleanout penetration. The limited area removed from this layer was considered negligible for flow capacity reduction.

7.3 SOIL COVER COMPONENTS

Following the installation of the geocomposite, the cover protective soil and topsoil were placed. There were two types of soil used for the cover protective soil: the onsite west soil stockpile, and an offsite borrow soil. The results of the laboratory testing for the two soils are shown in **Appendix K**.

7.3.1 Protective Soil Layer Sampling and Testing

The onsite soil stockpile and the offsite borrow source were tested according to the CQA Plan requirements and determined to be suitable soils. The permeability characteristics were deemed to be the most critical component of how the two soils interacted with each other. The onsite soil stockpile had a higher permeability than the borrow soil and was required to be the bottom layer. The goal of having the higher permeability soil as the bottom layer is to allow water that has infiltrated the upper layer to more quickly pass through the lower layer, preventing excessive pore pressure and soil weakening. The geometry described is shown on **Detail 1, Drawing C5.4.**

Both soils utilized as cover protective soil were also required to have characteristics that would reduce the likelihood of clogging the geotextile portion of the geocomposite. The Hydraulic conductivity ratio (HCR) test and double hydrometer test were used to determine the suitability of the soils. The HCR test is used to directly test how soils interact with a geotextile. However, this test is difficult to use with low permeability soils, as the ASTM requires multiple volume-equivalents of water to pass through the soil prior to determining the results, which can take months. After discussions with Dr. Jeff Kuhn of TRI Environmental, the double hydrometer test was determined to be a suitable

substitute for this test, as it is a measure of the dispersive characteristics of a soil (i.e. how much the soil particles will mobilize into the geotextile).

HCR testing was started for the onsite soil stockpile. This testing was terminated after approximately 2 weeks when the endpoint to complete the test was estimated to be months away. The early endpoint results are shown in **Appendix K**. Double hydrometer testing was then started. The Contractor later recognized that the onsite soil stockpile quantity would be insufficient to complete the cover soil placement. A double hydrometer test was performed on the proposed offsite borrow source soil, which was determined to be non-dispersive.

The offsite borrow source was also used as the topsoil layer. The soil was determined to meet the requirements for both the cover protective soil layer and topsoil layer. In areas where the onsite soil stockpile was not used as cover protective soil, a single layer of the offsite borrow soil was placed as a single 2-foot-thick layer.

7.3.2 Protective Cover Soil Placement

Protective cover soil was graded from the bottom of the Closure Area to the top using a bulldozer. Dump trucks unloaded at the toe of the Closure Area slope, taking care not to drive on areas where geosynthetics had been previously deployed. The onsite soil stockpile was exhausted prior to importing soil. The onsite soil was placed on the 4:1 side slopes to start and then worked up the perimeter of the 10:1 side slopes. This allowed for the lower permeability offsite soil to be placed upslope, creating the drainage characteristics discussed above. This geometry is shown on **Detail 1, Drawing C5.4.**

7.3.3 Topsoil Placement and Testing

The topsoil for the Closure Area was obtained from the offsite borrow. The material was tested and conformed to the required parameters of the CQA Plan. The results of the laboratory testing are shown in **Appendix K**. It was hauled to the site using on road haul trucks and placed at the toe of the Closure Area slope. The soil was then graded up the slope from the bottom. In areas where onsite soil had been previously placed, a minimum of 6-inches of soil was placed, as determined by visual inspection by SCS personnel. The topsoil was also used as cover protective soil; in areas that were still exposed geocomposite, the cover protective soil layer and topsoil layer were placed as a single 2-foot-thick layer. The topsoil was visually inspected for uniformity and changing conditions by SCS personnel as it was delivered to the site.

7.3.4 Soil Thickness Documentation

The cover protective soil and topsoil layers were surveyed as a single 2-foot-thick layer. Survey locations were on a minimum of a 100-foot grid and at grade breaks at the same locations as the top of ash (subgrade). The thickness check comparing top of ash to the top of topsoil is shown in **Table 6**, with the corresponding points shown on **Figure 4**. The final top of topsoil grades are shown on **Drawing C3.3**. The soil cover above the geosynthetic cover was confirmed to be a minimum of 2-feet.

8.0 PERIMETER ACCESS ROADS

JB Holland constructed a new access road along the top of the separation berm on the east side of the Closure Area (outside the cover limits) and reconstructed the access roads on the west and south sides of the Closure Area. The prepared subgrade for the access roads consisted of general fill

or existing non-impacted soil. JB Holland also repaired the existing access road around the remaining pond, south of the Clearwater Ponds, and north side of the Closure Area. **Drawing C4.3** shows limits of the access road construction and re-construction.

JB Holland installed a woven geotextile, GSFW-315, distributed by ASP Enterprises, above the prepared subgrade of the new access roads. An approximate 8-inch-thick layer of subgrade aggregate and approximate 4-inch layer of gravel surface course were placed successively above the geotextile. Each lift was graded and then compacted using a vibratory smooth drum compactor. Subgrade aggregate and gravel surface course lab reports are located in **Appendix F** and geotextile fabric information is located in **Appendix G**.

SCS observed the construction of the access road to document thickness of the subgrade aggregate and gravel surface course. A survey of final access road construction verified design grades for drainage purposes. The access road locations are shown on **Drawing C4.3.**

9.0 SURFACE WATER MANAGEMENT FEATURES

9.1 FINAL COVER DRAINAGE

9.1.1 Final Cover Perimeter Swale and Diversion Berm

The Closure Area final cover design included a perimeter swale with a highpoint on the west side. It also includes a diversion berm on the east side slope to limit run-off across the separation berm access road. The stormwater features convey the water that runs off the Closure Area slope to stormwater pipes in the northeast and southeast corners of the Closure Area. Both the perimeter swale and diversion berm flow paths are lined with channel erosion mat. The perimeter swale is a v-ditch with 2:1 side slopes, with a flowline slope of 0.5 percent. The diversion berm has a foreslope and backslope of 2:1, with a varying flowline slope from 1.0 percent to 10.0 percent. The swale and diversion berm are shown on **Drawing C4.0** and in cross sections on **Drawings C3.5** and **C3.6**. The final cover stormwater management features direct stormwater from the Closure Area to the eastern portion of the former Ash Pond.

9.1.2 Culverts and Structures

A summary of the CPEP culverts installed for surface water management off the closure area final cover is provided below. Location, plan, and profile of the culverts are shown on **Drawing C4.1**. Material manufacturer's information is included in **Appendix L**.

- The **North Stormwater Pipe** is a 24-inch diameter single barrel culvert located at the northeast corner of the Closure Area. The pipe has an inlet that receives flow from the north sides of the perimeter swale and the diversion berm. It then conveys the stormwater through the separation berm, below the access road, to the remaining pond.

- The **South Stormwater Pipe** is a 24-inch-diameter single barrel culvert located at the southeast corner of the Closure Area. The west section of pipe has an inlet that receives flow from the south side of the perimeter swale. It conveys the stormwater to the single stormwater structure of the project, which also receives water from portions of the perimeter toe drain and the southern portion of the diversion berm. The east section of the pipe then conveys water from the stormwater structure through the separation berm, below the access road, to the remaining pond.

- The **Perimeter Toe Drain** is a 4-inch-diameter perforated pipe that receives water from the geocomposite drainage layer, which receives infiltrated stormwater from the overlying soil layers. The plan and profiles of the toe drain are shown on **Drawing C4.1,** which further references the appropriate details. The two toe drain outlets each combine two legs of 4-inch perforated pipe into a single 10-inch solid pipe. The north toe drain outlet flows directly into the remaining pond, while the south toe drain outlet flows into the stormwater structure.

- The **Stormwater Structure** is a 5-foot by 5-foot open area drain that receives water from the south half of the diversion berm, the west portion of the south stormwater pipe, and from the south toe drain outlet. The outlet for the stormwater structure is the east portion of the south stormwater pipe.

Stormwater culvert piping was bedded in compacted sand, as shown on **Detail 3, Drawing C5.9**. Embankment erosion control geotextile and erosion stone were constructed at the outlet ends of the culverts. A summary of the stormwater pipe grades is shown on **Drawing C4.1**.

9.1.3 Rock Chutes, Aprons, and Emergency Spillways

Two rock chutes were constructed on the east slope of the separation berm as part of the stormwater outlets to convey water into the remaining pond. The rock chutes were constructed to be above grade with a general fill berm defining the outer edges. A separation geotextile (Mirafi 170N, Solmax) was installed after grading was completed and 18 inches of Iowa Department of Transportation (IDOT) specification erosion stone was installed above the geotextile. The rock chutes are shown on **Drawings C3.3** and **C4.3,** and **Detail 4, Drawing C5.9.**

10.0 SITE RESTORATION

The Closure Area, side slopes of the remaining pond, onsite soil stockpiles, and project area exterior side slope that had been cleared and grubbed were seeded and covered with erosion control product. Site restoration activities were performed by Absolute Group of Granger, Iowa, between August 8, 2025, and August 15, 2025. Manufacturer's information for seed mixes and restoration materials used are located in **Appendix M.**

Permanent seed was applied in areas disturbed during closure construction. Channel erosion mat was installed within the limits of the perimeter swale v-ditch and diversion berm flow paths. Non channel erosion mat was used on the remainder of the Closure Area. Non-channel erosion mat was also used on the east side of the separation berm. Straw mulch was used for the remaining areas. The limits of each type of restoration are shown on **Drawing C4.3**.

Iowa DOT Type 2 seed mixture and 13-13-13 fertilizer were used for vegetative restoration of the disturbed areas. Seed mixture and application rates used are outlined in the CQA Plan. The remaining pond below the current water level was not seeded.

[This page left blank intentionally]

Tables

1 Contact Water Collection System Pipe Grades
2 Separation Berm Clay Liner Grade Table
3 Separation Berm Field Moisture and Density Test Results
3.1 Nuclear Density Gauge Calibration
4 Clay Soil Laboratory Test Results
5 Separation Berm Clay Liner In-Situ Sample Laboratory Test Results
6 Closure Area Final Cover Grade Table

Table 1. Contact Water Collection System Pipe Grades
Ames Steam Electric Plant
Ash Pond Closure

Point No.	Location		Leachate Collection Pipe Top of Pipe Elevation	Comments
	Northing	Easting	Actual (ft)	
West Collection Line				
1028	3,473,509.3	4,894,362.3	883.71	4-Way Tee
1001	3,473,510.4	4,894,362.2	883.79	
1002	3,473,528.3	4,894,363.3	884.79	
1003	3,473,542.2	4,894,364.3	885.79	
1004	3,473,560.7	4,894,365.3	886.79	
1005	3,473,579.1	4,894,365.1	887.79	
1006	3,473,593.2	4,894,364.8	888.79	
1007	3,473,609.3	4,894,364.2	889.79	
1008	3,473,625.4	4,894,363.7	890.79	
1009	3,473,643.6	4,894,363.8	891.79	
1010	3,473,662.5	4,894,364.1	892.79	
1011	3,473,679.9	4,894,364.2	893.79	
1012	3,473,699.8	4,894,365.0	894.79	
1013	3,473,722.4	4,894,365.5	895.79	
1014	3,473,744.9	4,894,365.9	896.79	
1015	3,473,763.1	4,894,366.0	897.79	
1016	3,473,780.9	4,894,366.3	898.79	
1017	3,473,798.6	4,894,367.2	899.79	
1018	3,473,815.1	4,894,367.9	900.79	
1019	3,473,834.6	4,894,368.4	901.79	
1020	3,473,855.0	4,894,368.0	902.79	
1021	3,473,874.1	4,894,368.1	903.79	
1022	3,473,874.1	4,894,368.1	904.79	
1023	3,473,893.0	4,894,368.4	884.21	4-Way Tee
South Collection Line				
1028	3,473,509.3	4,894,362.3	883.71	4-Way Tee
1033	3,473,509.1	4,894,380.5	884.08	
1034	3,473,508.8	4,894,400.6	885.08	
1035	3,473,509.1	4,894,417.7	886.08	
1036	3,473,509.0	4,894,436.4	887.08	
1037	3,473,509.4	4,894,457.0	888.08	
1038	3,473,509.5	4,894,476.2	889.08	
1039	3,473,508.9	4,894,493.1	890.08	
1040	3,473,508.9	4,894,511.2	891.08	
1041	3,473,509.9	4,894,533.2	892.08	
1050	3,473,510.5	4,894,552.2	893.08	
1051	3,473,512.2	4,894,574.1	884.04	Start of Cleanout

Table 1. Contact Water Collection System Pipe Grades
Ames Steam Electric Plant
Ash Pond Closure

Point No.	Location		Leachate Collection Pipe Top of Pipe Elevation	Comments
	Northing	Easting	Actual (ft)	
North Collection Line				
1023	3,473,893.0	4,894,368.4	884.21	4-Way Tee
1060	3,473,894.3	4,894,390.5	884.11	
1061	3,473,895.5	4,894,414.6	885.11	
1062	3,473,897.1	4,894,438.8	886.11	
1063	3,473,898.6	4,894,462.7	887.11	
1064	3,473,899.3	4,894,480.7	888.11	
1065	3,473,899.7	4,894,492.1	889.11	
1066	3,473,899.9	4,894,502.6	890.11	
1067	3,473,900.1	4,894,512.2	891.11	
1068	3,473,900.3	4,894,523.1	892.11	
1069	3,473,900.5	4,894,533.8	893.11	
1070	3,473,901.0	4,894,546.6	894.11	
1071	3,473,900.9	4,894,558.9	895.11	
1072	3,473,900.7	4,894,571.1	896.11	
1073	3,473,900.4	4,894,582.0	897.11	
1074	3,473,900.1	4,894,590.8	887.26	4-Way Tee
East Collection Line				
1074	3,473,900.1	4,894,590.8	887.26	4-Way Tee
1075	3,473,891.2	4,894,590.7	886.18	
1076	3,473,882.2	4,894,590.7	887.18	
1077	3,473,873.2	4,894,590.7	888.18	
1078	3,473,863.1	4,894,590.8	889.18	
1079	3,473,851.1	4,894,590.5	890.18	
1080	3,473,840.2	4,894,590.0	891.18	
1052	3,473,830.2	4,894,590.2	892.18	
1053	3,473,806.9	4,894,591.0	893.18	
1054	3,473,784.4	4,894,591.3	894.18	
1055	3,473,762.9	4,894,591.2	895.18	
1056	3,473,738.2	4,894,591.9	896.18	
1057	3,473,713.7	4,894,592.7	897.18	
1058	3,473,693.4	4,894,592.2	898.18	
1059	3,473,672.5	4,894,592.1	899.18	
1042	3,473,654.8	4,894,591.8	900.18	
1043	3,473,633.9	4,894,591.2	901.18	
1044	3,473,614.5	4,894,591.9	902.18	
1045	3,473,588.8	4,894,591.6	903.18	
1046	3,473,566.9	4,894,591.5	904.18	
1047	3,473,546.1	4,894,591.5	905.18	

Table 1. Contact Water Collection System Pipe Grades
Ames Steam Electric Plant
Ash Pond Closure

Point No.	Location		Leachate Collection Pipe Top of Pipe Elevation	Comments
	Northing	Easting	Actual (ft)	
1048	3,473,522.6	4,894,590.8	906.18	
1049	3,473,497.8	4,894,591.0	883.85	Start of Cleanout
Contact Water Collection System Riser Pipe				
1086	3,473,537.9	4,894,587.1	885.07	Cap
1087	3,473,526.2	4,894,587.0	885.08	
1088	3,473,516.4	4,894,586.9	886.08	
1089	3,473,506.7	4,894,587.0	887.08	
1090	3,473,497.8	4,894,587.0	888.08	Bend
1091	3,473,497.1	4,894,587.0	889.08	Bend
1092	3,473,496.3	4,894,587.0	890.08	Bend
1116	3,473,485.4	4,894,586.9	891.08	
1120	3,473,477.5	4,894,587.1	892.08	
1122	3,473,468.2	4,894,587.4	893.08	
1139	3,473,462.9	4,894,587.6	894.08	
1177	3,473,455.2	4,894,587.7	900.56	At Vault Opening

Table 1. Contact Water Collection System Pipe Grades
Ames Steam Electric Plant
Ash Pond Closure

Point No.	Location		Leachate Collection Pipe Top of Pipe Elevation	Comments
	Northing	Easting	Actual (ft)	
Northwest Dual Direction Cleanout (North Collection Line)				
1023	3,473,893.0	4,894,368.4	884.21	4-Way Tee
1026	3,473,893.1	4,894,367.7	884.22	Start Sweep
1027	3,473,894.9	4,894,365.3	885.31	End Sweep
1123	3,473,916.1	4,894,366.5	899.16	
Northwest Dual Direction Cleanout (West Collection Line)				
1023	3,473,893.0	4,894,368.4	884.21	4-Way Tee
1024	3,473,894.6	4,894,368.4	884.21	Bend
1025	3,473,896.1	4,894,368.4	884.74	Bend
1124	3,473,916.7	4,894,369.2	899.11	
Southwest Dual Direction Cleanout (South Collection Line)				
1028	3,473,509.3	4,894,362.3	883.71	4-Way Tee
1031	3,473,509.3	4,894,361.4	883.72	Start Sweep
1032	3,473,507.4	4,894,358.9	884.59	End Sweep
1127	3,473,481.5	4,894,357.0	899.40	
Southwest Dual Direction Cleanout (West Collection Line)				
1028	3,473,509.3	4,894,362.3	883.71	4-Way Tee
1029	3,473,507.5	4,894,362.3	883.62	Bend
1030	3,473,506.0	4,894,362.2	884.08	Bend
1128	3,473,481.2	4,894,359.5	899.20	
Northeast Dual Direction Cleanout (North Collection Line)				
1074	3,473,900.1	4,894,590.8	887.26	4-Way Tee
1084	3,473,900.1	4,894,591.4	886.97	Start Sweep
1085	3,473,901.9	4,894,593.6	887.91	End Sweep
1126	3,473,915.3	4,894,593.1	898.32	
Northeast Dual Direction Cleanout (East Collection Line)				
1074	3,473,900.1	4,894,590.8	887.26	4-Way Tee
1081	3,473,901.5	4,894,590.4	887.09	Bend
1082	3,473,902.2	4,894,590.4	887.40	Bend
1083	3,473,903.0	4,894,590.5	887.80	Bend
1125	3,473,915.2	4,894,590.9	898.30	

Table 1. Contact Water Collection System Pipe Grades
Ames Steam Electric Plant
Ash Pond Closure

Point No.	Location		Leachate Collection Pipe Top of Pipe Elevation	Comments
	Northing	Easting	Actual (ft)	
Southeast Collector Cleanout (South Collection Line)				
1051	3,473,512.2	4,894,574.1	884.04	Start Sweep
1097	3,473,510.1	4,894,576.8	884.07	End Sweep
1115	3,473,489.6	4,894,579.8	891.58	
1121	3,473,466.8	4,894,579.3	894.41	
1176	3,473,459.6	4,894,578.6	896.93	
Southeast Collector Cleanout (East Collection Line)				
1093	3,473,497.0	4,894,590.6	883.90	Bend
1094	3,473,496.1	4,894,590.6	884.22	Bend
1095	3,473,495.3	4,894,590.6	884.47	Bend
1096	3,473,494.7	4,894,590.6	885.02	Bend
1117	3,473,486.6	4,894,590.4	888.56	
1118	3,473,469.9	4,894,592.3	892.74	
1119	3,473,457.5	4,894,594.9	896.74	

Data Entered By: CTC, 12/31/24
Checked: MRK, 9/28/25

Table 2. Separation Berm Clay Liner Grade Table

Ames Steam Electric Plant - Ash Pond Closure

SCS Engineers Project #27219356.02

Documentation Point Number	Location		Bottom of Clay Liner	Top of Clay Liner	
	Northing	Easting	As-Built Elev. (ft)	As-Built Elev. (ft)	Thickness (ft)
3002	3,473,799.2	4,894,601.9	882.1	885.6	3.6
3003	3,473,699.3	4,894,601.9	881.7	885.7	4.0
3004	3,473,599.3	4,894,602.0	880.6	885.5	5.0
3005	3,473,499.3	4,894,601.9	882.0	885.7	3.6
3006	3,473,899.3	4,894,632.0	892.9	896.0	3.1
3007	3,473,799.3	4,894,632.0	892.9	896.0	3.1
3008	3,473,699.3	4,894,632.0	892.8	895.9	3.0
3009	3,473,599.3	4,894,632.0	892.9	896.0	3.1
3010	3,473,499.3	4,894,632.0	892.9	895.9	3.1
3042	3,473,886.0	4,894,602.1	883.0	886.0	3.0
3044	3,473,908.3	4,894,617.2	888.1	891.3	3.2
3046	3,473,923.9	4,894,626.4	891.1	894.3	3.2
3052	3,473,688.6	4,894,601.5	882.8	885.9	3.1
3054	3,473,682.0	4,894,601.4	882.8	885.9	3.1
3056	3,473,671.9	4,894,601.9	881.5	885.7	4.2
3058	3,473,489.6	4,894,600.5	882.5	886.1	3.6
3060	3,473,476.4	4,894,612.3	886.4	889.6	3.2
3062	3,473,461.6	4,894,626.6	891.2	894.4	3.2
3065	3,473,456.6	4,894,632.0	893.0	896.1	3.2

Prepared by: CTC 1/2/25

Checked by: MRK 9/28/25

Table 3 - Separation Berm Field Moisture and Density Test results

SCS ENGINEERS - Nuclear Density Gauge Test Record

Note: This is a PROPRIETARY SPREADSHEET for the internal use by SCS Engineers ONLY. Those that use this spreadsheet without authorization by SCS Engineers, INC. should be advised that errors have been programed into the logic which render the output unreliable should authentication codes not be updated periodically.

CCL

Client Name: *City of Ames*
SCS Engineers Proj Name: *Ash Pond Closure*
SCS Engineers Proj No.: *27219356.02*
Project Location: *City of Ames Ash Pond*

Plot Failures Only insert (x): x

Mat #	Source Area	% Max DD for ET Cover
1	ORANGE, LINER	
2	-3' to -6', FILL	
3	ORANGE, FILL	
4	-3' to -6', FILL, NO MAX MC	
5	ORANGE, FILL, NO MAX MC	
6		
7		
		0

Test Number Formatting Notes
Test Designation Legend **0001 - 5199**
Lift Designation 000.**01** -000.**99**
Test Designation Legend 000.00.**01** - 000.00.**99**
Retest Designation 000.00.00.**1** - 000.00.00.**9**

Prepared By: CTC, 9/18/25
Checked by: MRK, 9/19/25

Material Designation	ORANGE, LINER 1	-3' to -6', FILL 2	ORANGE, FILL 3	-3' to -6', FILL, NO MAX MC 4	ORANGE, FILL, NO MAX MC 5	6	7
Description: USCS / Color	Clayey Sand/Sandy Clay, Trace Gravel, Orange Brown	Sandy lean clay brown trace gravel (Elder Borrow, -3' to -6')	Clayey Sand/Sandy Clay, Trace Gravel, Orange Brown	Sandy lean clay brown trace gravel (Elder Borrow, -3' to -6')	Clayey Sand/Sandy Clay, Trace Gravel, Orange Brown		
ASTM Test	D-698	D-698	D-698	D-698	D-698	D-698	D-698
Max Proctor Dry Density	121.2 pcf	120.6 pcf	121.2 pcf	120.60 pcf	121.2 pcf		
Optimum Moisture Content	12.2%	11.4%	12.2%	11.4%	12.2%		
SpGr	2.80	2.80	2.80	2.80	2.80		
Acceptance Zone Point Limits MC_1	12.200%	9.400%	10.200%	9.400%	10.200%		
γ_{d1}	130.23 pcf	138.32 pcf	135.91 pcf	138.32 pcf	135.91 pcf		
MC_2	12.2%	9.4%	10.2%	9.400%	10.200%		
γ_{d2}	**115.14 pcf**	**114.57 pcf**	**115.14 pcf**	**114.57 pcf**	**115.14 pcf**		
MC_3	15.200%	13.400%	14.200%	18.750%	18.481%		
γ_{d3}	115.14 pcf	114.57 pcf	115.14 pcf	114.57 pcf	115.14 pcf		
MC_4	15.20%	13.40%	14.20%	18.75%	18.48%		
γ_{d4}	122.56 pcf	127.05 pcf	125.01 pcf	114.57 pcf	115.14 pcf		
MC_5	**15.200%**	**13.400%**	**14.200%**	**18.750%**	**18.481%**		
γ_{d5}	**122.56 pcf**	**127.05 pcf**	**125.01 pcf**	**114.57 pcf**	**115.14 pcf**		
MC_6	**15.200%**	**13.400%**	**14.200%**	**18.750%**	**18.481%**		
γ_{d6}	**122.56 pcf**	**127.05 pcf**	**125.01 pcf**	**114.57 pcf**	**115.14 pcf**		

Note: Comments on this row apply to the last data density entry above if 6 data sets are not entered.>>>

NDT Range Correction =

Max DD ET Cover

Item	Date	Numeric Input	Test Number	Retest #	Material Designation	Lift (6-inch In-place)	Probe Depth	Wet Density	Water Weight	Dry Density	Moisture Content	Percent Compaction	Pass / Fail	Comments: (Automatic and Manual)			
	MM/DD/YY	GG.LLTTR	GG.LL.TT.R			1 to 99	(in)	(pcf)	(pcf)	(pcf)	(%)	(%)		MC or DD	Retest	Manual comments here	ET cover
160	09/06/24	01.01.01.	01.01.01.		1	1	6.0 in	129.40 pcf	13.00 pcf	116.4 pcf	11.2%	96.0%	FAIL	Low MC			
162	09/06/24	01.01.01.1	01.01.01.1	R1 OK	1	1	6.0 in	130.90 pcf	14.50 pcf	116.4 pcf	12.5%	96.0%	P		Retest Passed		
164	09/06/24	01.02.01.	01.02.01.		1	2	6.0 in	130.80 pcf	14.60 pcf	116.2 pcf	12.6%	95.9%	P				
166	09/06/24	01.03.01.	01.03.01.		1	3	6.0 in	134.70 pcf	14.70 pcf	120.0 pcf	12.3%	99.0%	P				
169	09/06/24	01.04.01.	01.04.01.		1	4	6.0 in	134.80 pcf	16.00 pcf	118.8 pcf	13.5%	98.0%	P				
171	09/06/24	01.05.01.	01.05.01.		1	5	6.0 in	133.40 pcf	15.10 pcf	118.3 pcf	12.8%	97.6%	P				
173	09/06/24	01.06.01.	01.06.01.		1	6	6.0 in	132.40 pcf	14.50 pcf	117.9 pcf	12.3%	97.3%	P				
127	09/04/24	02.01.01.	02.01.01.		1	1	6.0 in	130.50 pcf	15.20 pcf	115.3 pcf	13.2%	95.1%	P				
131	09/04/24	02.02.01.	02.02.01.		1	2	6.0 in	130.90 pcf	14.80 pcf	116.1 pcf	12.7%	95.8%	P				
136	09/04/24	02.03.01.	02.03.01.		1	3	6.0 in	138.20 pcf	15.20 pcf	123.0 pcf	12.4%	101.5%	P				
143	09/05/24	02.04.01.	02.04.01.		1	4	6.0 in	133.70 pcf	13.80 pcf	119.9 pcf	11.5%	98.9%	FAIL	Low MC			
145	09/05/24	02.04.01.1	02.04.01.1	R1 OK	1	4	6.0 in	129.40 pcf	14.20 pcf	115.2 pcf	12.3%	95.0%	P		Retest Passed		
150	09/05/24	02.05.01.	02.05.01.		1	5	6.0 in	130.80 pcf	15.10 pcf	115.7 pcf	13.1%	95.5%	P				
155	09/05/24	02.06.01.	02.06.01.		1	6	6.0 in	133.40 pcf	14.60 pcf	118.8 pcf	12.3%	98.0%	P				
128	09/04/24	03.01.01.	03.01.01.		1	1	6.0 in	132.10 pcf	14.40 pcf	117.7 pcf	12.2%	97.1%	P				
132	09/04/24	03.02.01.	03.02.01.		1	2	6.0 in	130.20 pcf	13.60 pcf	116.6 pcf	11.7%	96.2%	FAIL	Low MC			
135	09/04/24	03.02.01.1	03.02.01.1	R1 OK	1	2	6.0 in	132.60 pcf	14.70 pcf	117.9 pcf	12.5%	97.3%	P		Retest Passed		
137	09/04/24	03.03.01.	03.03.01.		1	3	6.0 in	135.50 pcf	14.30 pcf	121.2 pcf	11.8%	100.0%	FAIL	Low MC			
140	09/05/24	03.03.01.1	03.03.01.1	R1 OK	1	3	6.0 in	134.00 pcf	17.60 pcf	116.4 pcf	15.1%	96.0%	P		Retest Passed		
142	09/05/24	03.04.01.	03.04.01.		1	4	6.0 in	134.60 pcf	14.70 pcf	119.9 pcf	12.3%	98.9%	P				
149	09/05/24	03.05.01.	03.05.01.		1	5	6.0 in	129.90 pcf	16.10 pcf	113.8 pcf	14.1%	93.9%	FAIL	Low Dry Den			
151	09/05/24	03.05.01.1	03.05.01.1	R1 OK	1	5	6.0 in	133.50 pcf	14.70 pcf	118.8 pcf	12.4%	98.0%	P		Retest Passed		
154	09/05/24	03.06.01.	03.06.01.		1	6	6.0 in	128.20 pcf	13.30 pcf	114.9 pcf	11.6%	94.8%	FAIL	Low MC			
156	09/05/24	03.06.01.1	03.06.01.1	R1 OK	1	6	6.0 in	131.50 pcf	14.60 pcf	116.9 pcf	12.5%	96.5%	P		Retest Passed		
129	09/04/24	04.01.01.	04.01.01.		1	1	6.0 in	135.10 pcf	16.80 pcf	118.3 pcf	14.2%	97.6%	P				
133	09/04/24	04.02.01.	04.02.01.		1	2	6.0 in	136.10 pcf	15.20 pcf	120.9 pcf	12.6%	99.8%	P				
138	09/04/24	04.03.01.	04.03.01.		1	3	6.0 in	131.40 pcf	15.00 pcf	116.4 pcf	12.9%	96.0%	P				
141	09/05/24	04.04.01.	04.04.01.		1	4	6.0 in	133.60 pcf	14.10 pcf	119.5 pcf	11.8%	98.6%	FAIL	Low MC			
146	09/05/24	04.04.01.1	04.04.01.1	R1 OK	1	4	6.0 in	131.70 pcf	14.90 pcf	116.8 pcf	12.8%	96.4%	P		Retest Passed		
148	09/05/24	04.05.01.	04.05.01.		1	5	6.0 in	136.30 pcf	16.30 pcf	120.0 pcf	13.6%	99.0%	P				
153	09/05/24	04.06.01.	04.06.01.		1	6	6.0 in	132.60 pcf	13.90 pcf	118.7 pcf	11.7%	97.9%	FAIL	Low MC			
157	09/05/24	04.06.01.1	04.06.01.1	R1 OK	1	6	6.0 in	131.70 pcf	14.50 pcf	117.2 pcf	12.4%	96.7%	P		Retest Passed		
130	09/04/24	05.01.01.	05.01.01.		1	1	6.0 in	137.50 pcf	15.30 pcf	122.2 pcf	12.5%	100.8%	P				
134	09/04/24	05.02.01.	05.02.01.		1	2	6.0 in	131.60 pcf	14.80 pcf	116.8 pcf	12.7%	96.4%	P				
139	09/05/24	05.03.01.	05.03.01.		1	3	6.0 in	133.30 pcf	17.50 pcf	115.8 pcf	15.1%	95.5%	P				
144	09/05/24	05.04.01.	05.04.01.		1	4	6.0 in	130.70 pcf	14.90 pcf	115.8 pcf	12.9%	95.5%	P				
147	09/05/24	05.05.01.	05.05.01.		1	5	6.0 in	136.30 pcf	15.20 pcf	121.1 pcf	12.6%	99.9%	P				
152	09/05/24	05.06.01.	05.06.01.		1	6	6.0 in	133.30 pcf	14.30 pcf	119.0 pcf	12.0%	98.2%	FAIL	Low MC			
158	09/05/24	05.06.01.1	05.06.01.1	R1 OK	1	6	6.0 in	129.60 pcf	14.10 pcf	115.5 pcf	12.2%	95.3%	P		Retest Passed		

Item	Date	Numeric Input	Test Number	Retest #	Material Designation	Lift (6-inch In-place)	Probe Depth	Wet Density	Water Weight	Dry Density	Moisture Content	Percent Compaction	Pass / Fail	Comments: (Automatic and Manual)			
	MM/DD/YY	GG.LLTTR	GG.LL.TT.R			1 to 99	(in)	(pcf)	(pcf)	(pcf)	(%)	(%)		MC or DD	Retest	Manual comments here	ET cover
159	09/06/24	06.01.01.	06.01.01.		1	1	6.0 in	127.40 pcf	13.40 pcf	114.0 pcf	11.8%	94.1%	FAIL	Low MC			
161	09/06/24	06.01.01.1	06.01.01.1	R1 OK	1	1	6.0 in	130.00 pcf	14.70 pcf	115.3 pcf	12.7%	95.1%	P		Retest Passed		
163	09/06/24	06.02.01.	06.02.01.		1	2	6.0 in	130.40 pcf	15.00 pcf	115.4 pcf	13.0%	95.2%	P				
165	09/06/24	06.03.01.	06.03.01.		1	3	6.0 in	132.20 pcf	13.40 pcf	118.8 pcf	11.3%	98.0%	FAIL	Low MC			
167	09/06/24	06.03.01.1	06.03.01.1	R1 OK	1	3	6.0 in	129.70 pcf	14.20 pcf	115.5 pcf	12.3%	95.3%	P		Retest Passed		
168	09/06/14	06.04.01.	06.04.01.		1	4	6.0 in	133.80 pcf	14.90 pcf	118.9 pcf	12.5%	98.1%	P				
170	09/06/24	06.05.01.	06.05.01.		1	5	6.0 in	130.80 pcf	15.20 pcf	115.6 pcf	13.1%	95.4%	P				
172	09/06/24	06.06.01.	06.06.01.		1	6	6.0 in	134.00 pcf	14.80 pcf	119.2 pcf	12.4%	98.3%	P				
25	08/09/24	07.01.01.	07.01.01.		4	1	6.0 in	134.90 pcf	16.10 pcf	118.8 pcf	13.6%	98.5%	P				
29	08/09/24	07.02.01.	07.02.01.		4	2	6.0 in	134.00 pcf	16.90 pcf	117.1 pcf	14.4%	97.1%	P				
20	08/07/24	07.03.01.	07.03.01.		4	3	6.0 in	135.30 pcf	16.40 pcf	118.9 pcf	13.8%	98.6%	P				
27	08/09/24	07.04.01.	07.04.01.		4	4	6.0 in	136.70 pcf	15.60 pcf	121.1 pcf	12.9%	100.4%	P				
36	08/20/24	07.05.01.	07.05.01.		4	5	6.0 in	136.20 pcf	15.00 pcf	121.2 pcf	12.4%	100.5%	P				
40	08/21/24	07.06.01.	07.06.01.		4	6	6.0 in	135.20 pcf	16.90 pcf	118.3 pcf	14.3%	98.1%	P				
47	08/22/24	07.07.01.	07.07.01.		4	7	6.0 in	136.30 pcf	16.60 pcf	119.7 pcf	13.9%	99.3%	P				
51	08/22/24	07.08.01.	07.08.01.		4	8	6.0 in	134.50 pcf	16.90 pcf	117.6 pcf	14.4%	97.5%	P				
55	08/23/24	07.09.01.	07.09.01.		4	9	6.0 in	134.50 pcf	16.00 pcf	118.5 pcf	13.5%	98.3%	P				
66	08/26/24	07.10.01.	07.10.01.		4	10	6.0 in	132.30 pcf	16.30 pcf	116.0 pcf	14.1%	96.2%	P				
75	08/26/24	07.11.01.	07.11.01.		4	11	6.0 in	131.00 pcf	18.30 pcf	112.7 pcf	16.2%	93.4%	FAIL	Low Dry Den			
76	08/26/24	07.11.01.1	07.11.01.1	R1 OK	4	11	6.0 in	132.60 pcf	15.40 pcf	117.2 pcf	13.1%	97.2%	P		Retest Passed		
79	08/27/24	07.12.01.	07.12.01.		4	12	6.0 in	131.10 pcf	14.40 pcf	116.7 pcf	12.3%	96.8%	P				
86	08/28/24	07.13.01.	07.13.01.		4	13	6.0 in	135.50 pcf	16.00 pcf	119.5 pcf	13.4%	99.1%	P				
91	08/28/24	07.14.01.	07.14.01.		4	14	6.0 in	131.60 pcf	15.40 pcf	116.2 pcf	13.3%	96.4%	P				
100	08/29/24	07.15.01.	07.15.01.		4	15	6.0 in	138.90 pcf	15.30 pcf	123.6 pcf	12.4%	102.5%	P				
104	08/29/24	07.16.01.	07.16.01.		5	16	6.0 in	134.40 pcf	15.80 pcf	118.6 pcf	13.3%	97.9%	P				
111	08/29/24	07.17.01.	07.17.01.		3	17	6.0 in	130.60 pcf	15.00 pcf	115.6 pcf	13.0%	95.4%	P				
112	08/29/24	07.17.01.1	07.17.01.1	R1 OK	3	17	6.0 in	136.90 pcf	15.00 pcf	121.9 pcf	12.3%	100.6%	P		Retest Passed		
118	09/03/24	07.18.01.	07.18.01.		3	18	6.0 in	136.50 pcf	13.90 pcf	122.6 pcf	11.3%	101.2%	P				
122	09/03/24	07.19.01.	07.19.01.		3	19	6.0 in	136.90 pcf	15.70 pcf	121.2 pcf	13.0%	100.0%	P				
178	09/11/24	07.20.01.	07.20.01.		2	20	6.0 in	135.50 pcf	15.80 pcf	119.7 pcf	13.2%	99.3%	P				
182	09/13/24	07.21.01.	07.21.01.		2	21	6.0 in	129.60 pcf	17.70 pcf	111.9 pcf	15.8%	92.8%	FAIL	HighMC			
186	09/17/24	07.21.01.1	07.21.01.1	R1	2	21	6.0 in	124.70 pcf	17.60 pcf	107.1 pcf	16.4%	88.8%	FAIL	HighMC	and Retest Failed		
188	09/18/24	07.21.01.2	07.21.01.2	R2 OK	2	21	6.0 in	131.20 pcf	14.80 pcf	116.4 pcf	12.7%	96.5%	P		Retest Passed		
189	09/18/24	07.22.01.	07.22.01.		2	22	6.0 in	135.60 pcf	14.80 pcf	120.8 pcf	12.3%	100.2%	P				
10	08/02/24	08.01.01.	08.01.01.		4	1	6.0 in	133.90 pcf	15.10 pcf	118.8 pcf	12.7%	98.5%	P				
16	08/07/24	08.02.01.	08.02.01.		4	2	6.0 in	133.70 pcf	17.60 pcf	116.1 pcf	15.2%	96.3%	P				
21	08/07/24	08.03.01.	08.03.01.		4	3	6.0 in	136.90 pcf	17.50 pcf	119.4 pcf	14.7%	99.0%	P				
26	08/09/24	08.04.01.	08.04.01.		4	4	6.0 in	134.70 pcf	15.80 pcf	118.9 pcf	13.3%	98.6%	P				
34	08/20/24	08.05.01.	08.05.01.		4	5	6.0 in	135.30 pcf	15.10 pcf	120.2 pcf	12.6%	99.7%	P				
42	08/21/24	08.06.01.	08.06.01.		4	6	6.0 in	132.70 pcf	18.10 pcf	114.6 pcf	15.8%	95.0%	P				
44	08/21/24	08.07.01.	08.07.01.		4	7	6.0 in	134.80 pcf	16.10 pcf	118.7 pcf	13.6%	98.4%	P				
50	08/22/24	08.08.01.	08.08.01.		4	8	6.0 in	137.40 pcf	17.70 pcf	119.7 pcf	14.8%	99.3%	P				
58	08/23/24	08.09.01.	08.09.01.		4	9	6.0 in	132.10 pcf	19.80 pcf	112.3 pcf	17.6%	93.1%	FAIL	Low Dry Den			
63	08/26/24	08.09.01.1	08.09.01.1	R1	4	9	6.0 in	130.70 pcf	18.60 pcf	112.1 pcf	16.6%	93.0%	FAIL	Low Dry Den	and Retest Failed		
65	08/26/24	08.09.01.2	08.09.01.2	R2 OK	4	9	6.0 in	130.00 pcf	14.90 pcf	115.1 pcf	12.9%	95.4%	P		Retest Passed		
59	08/23/24	08.10.01.	08.10.01.		4	10	6.0 in	123.70 pcf	18.00 pcf	105.7 pcf	17.0%	87.6%	FAIL	Low Dry Den			
60	08/23/24	08.10.01.1	08.10.01.1	R1	4	10	6.0 in	129.80 pcf	18.70 pcf	111.1 pcf	16.8%	92.1%	FAIL	Low Dry Den	and Retest Failed		
64	08/26/24	08.10.01.2	08.10.01.2	R2 OK	4	10	6.0 in	133.40 pcf	15.30 pcf	118.1 pcf	13.0%	97.9%	P		Retest Passed		
71	08/26/24	08.11.01.	08.11.01.		4	11	6.0 in	128.50 pcf	15.50 pcf	113.0 pcf	13.7%	93.7%	FAIL	Low Dry Den			
72	08/26/24	08.11.01.1	08.11.01.1	R1 OK	4	11	6.0 in	134.30 pcf	15.60 pcf	118.7 pcf	13.1%	98.4%	P		Retest Passed		
73	08/26/24	08.11.01.2	08.11.01.2	R2 OK	4	11	6.0 in	134.30 pcf	15.60 pcf	118.7 pcf	13.1%	98.4%	P		Retest Passed	Duplicate Test Info	
82	08/27/24	08.12.01.	08.12.01.		4	12	6.0 in	132.50 pcf	18.80 pcf	113.7 pcf	16.5%	94.3%	FAIL	Low Dry Den			
83	08/27/24	08.12.01.1	08.12.01.1	R1 OK	4	12	6.0 in	133.90 pcf	18.50 pcf	115.4 pcf	16.0%	95.7%	P		Retest Passed		
88	08/28/24	08.13.01.	08.13.01.		4	13	6.0 in	133.90 pcf	17.70 pcf	116.2 pcf	15.2%	96.4%	P				
90	08/28/24	08.14.01.	08.14.01.		4	14	6.0 in	134.10 pcf	14.20 pcf	119.9 pcf	11.8%	99.4%	P				
97	08/28/24	08.15.01.	08.15.01.		4	15	6.0 in	135.60 pcf	16.10 pcf	119.5 pcf	13.5%	99.1%	P				
102	08/29/24	08.16.01.	08.16.01.		5	16	6.0 in	131.60 pcf	13.90 pcf	117.7 pcf	11.8%	97.1%	P				
107	08/29/24	08.17.01.	08.17.01.		3	17	6.0 in	122.30 pcf	14.60 pcf	107.7 pcf	13.6%	88.9%	FAIL	Low Dry Den			
109	08/29/24	08.17.01.1	08.17.01.1	R1 OK	3	17	6.0 in	133.60 pcf	15.40 pcf	118.2 pcf	13.0%	97.5%	P		Retest Passed		
116	08/29/24	08.18.01.	08.18.01.		3	18	6.0 in	126.60 pcf	15.90 pcf	110.7 pcf	14.4%	91.3%	FAIL	HighMC			
119	09/03/24	08.18.01.1	08.18.01.1	R1 OK	3	18	6.0 in	131.70 pcf	15.00 pcf	116.7 pcf	12.9%	96.3%	P		Retest Passed		
124	09/03/24	08.19.01.	08.19.01.		3	19	6.0 in	137.50 pcf	15.20 pcf	122.3 pcf	12.4%	100.9%	P				
126	09/03/24	08.20.01.	08.20.01.		3	20	6.0 in	133.90 pcf	13.50 pcf	120.4 pcf	11.2%	99.3%	P				
177	09/11/24	08.20.01.1	08.20.01.1	R1 OK	2	20	6.0 in	133.10 pcf	15.60 pcf	117.5 pcf	13.3%	97.4%	P		Retest Passed		

Item	Date	Numeric Input	Test Number	Retest #	Material Designation	Lift (6-inch In-place)	Probe Depth	Wet Density	Water Weight	Dry Density	Moisture Content	Percent Compaction	Pass / Fail	Comments: (Automatic and Manual)			
	MM/DD/YY	GG.LLTTR	GG.LL.TT.R			1 to 99	(in)	(pcf)	(pcf)	(pcf)	(%)	(%)		MC or DD	Retest	Manual comments here	ET cover
187	09/17/24	08.21.01.	08.21.01.		2	21	6.0 in	134.20 pcf	15.80 pcf	118.4 pcf	13.3%	98.2%	P				
190	09/18/24	08.22.01.	08.22.01.		2	22	6.0 in	134.00 pcf	15.60 pcf	118.4 pcf	13.2%	98.2%	P				
6	07/26/24	09.01.01.	09.01.01.		2	1	6.0 in	132.00 pcf	19.00 pcf	113.0 pcf	16.8%	93.7%	FAIL	HighMC			
9	07/29/24	09.01.01.1	09.01.01.1	R1	2	1	6.0 in	128.20 pcf	19.60 pcf	108.6 pcf	18.0%	90.0%	FAIL	HighMC	and Retest Failed		
11	08/02/24	09.01.01.2	09.01.01.2	R2 OK	4	1	6.0 in	132.20 pcf	14.70 pcf	117.5 pcf	12.5%	97.4%	P		Retest Passed		
19	08/07/24	09.02.01.	09.02.01.		4	2	6.0 in	134.90 pcf	15.30 pcf	119.6 pcf	12.8%	99.2%	P				
22	08/07/24	09.03.01.	09.03.01.		4	3	6.0 in	136.30 pcf	14.90 pcf	121.4 pcf	12.3%	100.7%	P				
28	08/09/24	09.04.01.	09.04.01.		4	4	6.0 in	136.20 pcf	15.50 pcf	120.7 pcf	12.8%	100.1%	P				
33	08/20/24	09.05.01.	09.05.01.		4	5	6.0 in	134.40 pcf	14.80 pcf	119.6 pcf	12.4%	99.2%	P				
39	08/21/24	09.06.01.	09.06.01.		4	6	6.0 in	134.20 pcf	18.90 pcf	115.3 pcf	16.4%	95.6%	P				
46	08/22/24	09.07.01.	09.07.01.		4	7	6.0 in	135.40 pcf	18.70 pcf	116.7 pcf	16.0%	96.8%	P				
49	08/22/24	09.08.01.	09.08.01.		4	8	6.0 in	135.00 pcf	19.50 pcf	115.5 pcf	16.9%	95.8%	P				
54	08/23/24	09.09.01.	09.09.01.		4	9	6.0 in	134.30 pcf	16.50 pcf	117.8 pcf	14.0%	97.7%	P				
61	08/23/24	09.10.01.	09.10.01.		4	10	6.0 in	134.50 pcf	17.80 pcf	116.7 pcf	15.3%	96.8%	P				
70	08/26/24	09.11.01.	09.11.01.		4	11	6.0 in	131.70 pcf	12.80 pcf	118.9 pcf	10.8%	98.6%	P				
78	08/27/24	09.12.01.	09.12.01.		4	12	6.0 in	134.20 pcf	16.50 pcf	117.7 pcf	14.0%	97.6%	P				
85	08/28/24	09.13.01.	09.13.01.		4	13	6.0 in	136.40 pcf	14.70 pcf	121.7 pcf	12.1%	100.9%	P				
92	08/28/24	09.14.01.	09.14.01.		4	14	6.0 in	130.80 pcf	16.00 pcf	114.8 pcf	13.9%	95.2%	P				
99	08/29/24	09.15.01.	09.15.01.		4	15	6.0 in	131.00 pcf	16.00 pcf	115.0 pcf	13.9%	95.4%	P				
105	08/29/24	09.16.01.	09.16.01.		5	16	6.0 in	136.40 pcf	14.90 pcf	121.5 pcf	12.3%	100.2%	P				
110	08/29/24	09.17.01.	09.17.01.		3	17	6.0 in	121.80 pcf	12.70 pcf	109.1 pcf	11.6%	90.0%	FAIL	Low Dry Den			
113	08/29/24	09.17.01.1	09.17.01.1	R1 OK	3	17	6.0 in	136.80 pcf	15.20 pcf	121.6 pcf	12.5%	100.3%	P		Retest Passed		
115	08/29/24	09.18.01.	09.18.01.		3	18	6.0 in	130.70 pcf	13.70 pcf	117.0 pcf	11.7%	96.5%	P				
121	09/03/24	09.19.01.	09.19.01.		3	19	6.0 in	133.80 pcf	14.90 pcf	118.9 pcf	12.5%	98.1%	P				
176	09/11/24	09.20.01.	09.20.01.		2	20	6.0 in	133.20 pcf	15.20 pcf	118.0 pcf	12.9%	97.8%	P				
181	09/11/24	09.21.01.	09.21.01.		2	21	6.0 in	135.20 pcf	15.30 pcf	119.9 pcf	12.8%	99.4%	P				
185	09/16/24	09.22.01.	09.22.01.		2	22	6.0 in	133.70 pcf	15.30 pcf	118.4 pcf	12.9%	98.2%	P				
8	07/29/24	10.01.01.	10.01.01.		2	1	6.0 in	134.40 pcf	18.30 pcf	116.1 pcf	15.8%	96.3%	FAIL	HighMC			
12	08/02/24	10.01.01.1	10.01.01.1	R1	4	1	6.0 in	130.30 pcf	16.60 pcf	113.7 pcf	14.6%	94.3%	FAIL	Low Dry Den	and Retest Failed		
13	08/05/24	10.01.01.2	10.01.01.2	R2 OK	4	1	6.0 in	133.90 pcf	15.80 pcf	118.1 pcf	13.4%	97.9%	P		Retest Passed		
15	08/07/24	10.02.01.	10.02.01.		4	2	6.0 in	133.70 pcf	15.80 pcf	117.9 pcf	13.4%	97.8%	P				
24	08/08/24	10.03.01.	10.03.01.		4	3	6.0 in	135.70 pcf	16.70 pcf	119.0 pcf	14.0%	98.7%	P				
31	08/19/24	10.04.01.	10.04.01.		4	4	6.0 in	133.00 pcf	15.20 pcf	117.8 pcf	12.9%	97.7%	P				
32	08/20/24	10.05.01.	10.05.01.		4	5	6.0 in	135.90 pcf	14.90 pcf	121.0 pcf	12.3%	100.3%	P				
38	08/21/24	10.06.01.	10.06.01.		4	6	6.0 in	134.10 pcf	18.30 pcf	115.8 pcf	15.8%	96.0%	P				
45	08/22/24	10.07.01.	10.07.01.		4	7	6.0 in	135.80 pcf	16.50 pcf	119.3 pcf	13.8%	98.9%	P				
52	08/22/24	10.08.01.	10.08.01.		4	8	6.0 in	133.20 pcf	17.90 pcf	115.3 pcf	15.5%	95.6%	P				
56	08/23/24	10.09.01.	10.09.01.		4	9	6.0 in	132.20 pcf	18.10 pcf	114.1 pcf	15.9%	94.6%	FAIL	Low Dry Den			
57	08/23/24	10.09.01.1	10.09.01.1	R1 OK	4	9	6.0 in	135.50 pcf	16.80 pcf	118.7 pcf	14.2%	98.4%	P		Retest Passed		
67	08/26/24	10.10.01.	10.10.01.		4	10	6.0 in	128.40 pcf	18.00 pcf	110.4 pcf	16.3%	91.5%	FAIL	Low Dry Den			
68	08/26/24	10.10.01.2	10.10.01.2	R2 OK	4	10	6.0 in	134.80 pcf	16.70 pcf	118.1 pcf	14.1%	97.9%	P		Retest Passed		
74	08/26/24	10.11.01.	10.11.01.		4	11	6.0 in	133.10 pcf	17.10 pcf	116.0 pcf	14.7%	96.2%	P				
80	08/27/24	10.12.01.	10.12.01.		4	12	6.0 in	133.00 pcf	19.60 pcf	113.4 pcf	17.3%	94.0%	FAIL	Low Dry Den			
81	08/27/24	10.12.01.1	10.12.01.1	R1 OK	4	12	6.0 in	133.20 pcf	18.60 pcf	114.6 pcf	16.2%	95.0%	P		Retest Passed		
87	08/28/24	10.13.01.	10.13.01.		4	13	6.0 in	134.10 pcf	14.80 pcf	119.3 pcf	12.4%	98.9%	P				
89	08/28/24	10.14.01.	10.14.01.		4	14	6.0 in	133.10 pcf	15.50 pcf	117.6 pcf	13.2%	97.5%	P				
96	08/28/24	10.15.01.	10.15.01.		4	15	6.0 in	131.60 pcf	15.20 pcf	116.4 pcf	13.1%	96.5%	P				
103	08/29/24	10.16.01.	10.16.01.		5	16	6.0 in	134.00 pcf	15.30 pcf	118.7 pcf	12.9%	97.9%	P				
106	08/29/24	10.17.01.	10.17.01.		3	17	6.0 in	132.80 pcf	15.60 pcf	117.2 pcf	13.3%	96.7%	P				
117	09/03/24	10.18.01.	10.18.01.		3	18	6.0 in	132.00 pcf	15.90 pcf	116.1 pcf	13.7%	95.8%	P				
120	09/03/24	10.19.01.	10.19.01.		3	19	6.0 in	135.10 pcf	13.10 pcf	122.0 pcf	10.7%	100.7%	P				
125	09/03/24	10.20.01.	10.20.01.		3	20	6.0 in	134.10 pcf	14.90 pcf	119.2 pcf	12.5%	98.3%	P				
175	09/11/24	10.20.01.1	10.20.01.1	R1 OK	2	20	6.0 in	132.10 pcf	14.10 pcf	118.0 pcf	11.9%	97.8%	P		Retest Passed		
180	09/11/24	10.21.01.	10.21.01.		2	21	6.0 in	137.90 pcf	14.40 pcf	123.5 pcf	11.7%	102.4%	P				
184	09/16/24	10.22.01.	10.22.01.		2	22	6.0 in	129.40 pcf	13.40 pcf	116.0 pcf	11.6%	96.2%	P				
7	07/29/24	11.01.01.	11.01.01.		2	1	6.0 in	131.20 pcf	18.80 pcf	112.4 pcf	16.7%	93.2%	FAIL	HighMC			
17	08/07/24	11.01.01.1	11.01.01.1	R1	4	1	6.0 in	130.20 pcf	16.20 pcf	114.0 pcf	14.2%	94.5%	FAIL	Low Dry Den	and Retest Failed		
18	08/07/24	11.01.01.2	11.01.01.2	R2 OK	4	1	6.0 in	134.50 pcf	15.90 pcf	118.6 pcf	13.4%	98.3%	P		Retest Passed		
14	08/07/24	11.02.01.	11.02.01.		4	2	6.0 in	134.50 pcf	12.20 pcf	122.3 pcf	10.0%	101.4%	P				
23	08/08/24	11.03.01.	11.03.01.		4	3	6.0 in	134.10 pcf	16.30 pcf	117.8 pcf	13.8%	97.7%	P				
30	08/19/24	11.04.01.	11.04.01.		4	4	6.0 in	135.50 pcf	14.90 pcf	120.6 pcf	12.4%	100.0%	P				
35	08/20/24	11.05.01.	11.05.01.		4	5	6.0 in	132.60 pcf	18.20 pcf	114.4 pcf	15.9%	94.9%	FAIL	Low Dry Den			
37	08/21/24	11.05.01.1	11.05.01.1	R1 OK	4	5	6.0 in	133.30 pcf	17.20 pcf	116.1 pcf	14.8%	96.3%	P		Retest Passed		
41	08/21/24	11.06.01.	11.06.01.		4	6	6.0 in	137.40 pcf	16.60 pcf	120.8 pcf	13.7%	100.2%	P				

Item	Date	Numeric Input	Test Number	Retest #	Material Designation	Lift (6-inch In-place)	Probe Depth	Wet Density	Water Weight	Dry Density	Moisture Content	Percent Compaction	Pass / Fail	Comments: (Automatic and Manual)			
	MM/DD/YY	GG.LLTTR	GG.LL.TT.R			1 to 99	(in)	(pcf)	(pcf)	(pcf)	(%)	(%)		MC or DD	Retest	Manual comments here	ET cover
43	08/21/24	11.07.01.	11.07.01.		4	7	6.0 in	136.80 pcf	16.70 pcf	120.1 pcf	13.9%	99.6%	P				
48	08/22/24	11.08.01.	11.08.01.		4	8	6.0 in	136.70 pcf	16.40 pcf	120.3 pcf	13.6%	99.8%	P				
53	08/23/24	11.09.01.	11.09.01.		4	9	6.0 in	137.10 pcf	16.50 pcf	120.6 pcf	13.7%	100.0%	P				
62	08/23/24	11.10.01.	11.10.01.		4	10	6.0 in	133.90 pcf	16.70 pcf	117.2 pcf	14.2%	97.2%	P				
69	08/26/24	11.11.01.	11.11.01.		4	11	6.0 in	132.90 pcf	16.40 pcf	116.5 pcf	14.1%	96.6%	P				
77	08/27/24	11.12.01.	11.12.01.		4	12	6.0 in	135.30 pcf	17.10 pcf	118.2 pcf	14.5%	98.0%	P				
84	08/28/24	11.13.01.	11.13.01.		4	13	6.0 in	132.70 pcf	15.30 pcf	117.4 pcf	13.0%	97.3%	P				
93	08/28/24	11.14.01.	11.14.01.		4	14	6.0 in	127.80 pcf	14.60 pcf	113.2 pcf	12.9%	93.9%	FAIL	Low Dry Den			
94	08/28/24	11.14.01.1	11.14.01.1	R1	4	14	6.0 in	128.90 pcf	16.10 pcf	112.8 pcf	14.3%	93.5%	FAIL	Low Dry Den	and Retest Failed		
95	08/28/24	11.14.01.2	11.14.01.2	R2 OK	4	14	6.0 in	134.00 pcf	16.30 pcf	117.7 pcf	13.8%	97.6%	P		Retest Passed		
98	08/29/24	11.15.01.	11.15.01.		4	15	6.0 in	129.30 pcf	13.90 pcf	115.4 pcf	12.0%	95.7%	P				
101	08/29/24	11.16.01.	11.16.01.		5	16	6.0 in	137.00 pcf	16.00 pcf	121.0 pcf	13.2%	99.8%	P				
108	08/29/24	11.17.01.	11.17.01.		3	17	6.0 in	133.80 pcf	15.90 pcf	117.9 pcf	13.5%	97.3%	P				
114	08/29/24	11.18.01.	11.18.01.		3	18	6.0 in	136.00 pcf	15.30 pcf	120.7 pcf	12.7%	99.6%	P				
123	09/03/24	11.19.01.	11.19.01.		3	19	6.0 in	138.90 pcf	15.20 pcf	123.7 pcf	12.3%	102.1%	P				
174	09/11/24	11.20.01.	11.20.01.		2	20	6.0 in	130.80 pcf	12.10 pcf	118.7 pcf	10.2%	98.4%	P				
179	09/11/24	11.21.01.	11.21.01.		2	21	6.0 in	133.90 pcf	15.10 pcf	118.8 pcf	12.7%	98.5%	P				
183	09/16/24	11.22.01.	11.22.01.		2	22	6.0 in	132.90 pcf	15.60 pcf	117.3 pcf	13.3%	97.3%	P				

Table 3.1 - Nuclear Density Gauge Calibration

SCS ENGINEERS - Nuclear Density Gauge Project Daily Calibration Record

ver 2021- v7 beta 1h3 rdt

NDT Device Data:	NDT Make and Model:	SN	F#
	Troxler 3430	37618	

Client Name: City of Ames

SCS Engineers Project Name: Ash Pond Closure

SCS Engineers Project Number: 27219356.02

Project Location: City of Ames Ash Pond

Prepared By: CTC, 9/18/25

Field Technician: Checked by: MRK, 9/19/25

Notes:

N_{DS} = Daily Standard Density Count

N_{MS} = Daily Standard Moisture Count

Latest Moisture and Denisty Factory Standard Count	Date	Average	
	26-Feb-2024	2028	*Denisty*
		605	*Moisture*

N_{DSave} = Rolling Average of prior 4 ea Daily Standard Density Counts

N_{MSave} = Rolling Average of prior 4 ea Daily Standard Moisture Counts

F = value of prescale default is 1.0 *(not used in these calculations)*

Uses Troxler Calibration Verification per ASTM D6938 - 10 Paragraphs 9.2.1, 9.2.2 and 9.2.3

IMPORTANT NOTE: *The first day the device is on site the technician should* ***run 5 standard counts*** *to develop the 4 test rolling average. If the 5th test passes (is within the calibration range) then proceed with field testing.* ***IF NOT CALL the PQC and / or SQC.***

						Density					Moisture		
	Test Date DD-MMM-YYY	SCS Operator's Last Name	Standard Density (DS)	Standard Moisture (MS)	PASS / FAIL Status	4 Count Average Standard Density (N_{DSave})	A = N_{DSave}-Var_{DS}	B = N_{DSave}+Var_{DS}	A ≤ DS ≤ B PASS / FAIL	4 Count Average Standard Moisture (N_{MSave})	C = N_{MSave}-Var_{MS}	D = N_{MSave}+Var_{MS}	C ≤ MS ≤ D PASS / FAIL
1	16-Jul-2024	Public	1982	603	Fails Density	2010.1	1990.0	2030.2	Fail	604.6	592.5	616.7	Pass
2	16-Jul-2024	Public	1987	597	Pass	2003.1	1983.0	2023.1	Pass	604.2	592.1	616.3	Pass
3	16-Jul-2024	Public	1984	599	Pass	1993.8	1973.8	2013.7	Pass	602.3	590.3	614.4	Pass
4	16-Jul-2024	Public	1994	597	Pass	1986.7	1966.8	2006.6	Pass	600.9	588.9	612.9	Pass
5	16-Jul-2024	Public	1989	598	Pass	1986.8	1966.9	2006.6	Pass	599.0	587.0	611.0	Pass
6	18-Jul-2024	Public	1967	599	Fails Density	1988.5	1968.6	2008.4	Fail	597.8	585.8	609.7	Pass
7	18-Jul-2024	Public	1987	599	Pass	1983.5	1963.7	2003.3	Pass	598.3	586.3	610.2	Pass
8	18-Jul-2024	Public	1986	595	Pass	1984.3	1964.4	2004.1	Pass	598.3	586.3	610.2	Pass
9	19-Jul-2024	Public	1975	596	Pass	1982.3	1962.4	2002.1	Pass	597.8	585.8	609.7	Pass
10	22-Jul-2024	Public	1967	575	Fails Moisture	1978.8	1959.0	1998.5	Pass	597.3	585.3	609.2	Fail
11	22-Jul-2024	Public	1974	590	Pass	1978.8	1959.0	1998.5	Pass	591.3	579.4	603.1	Pass
12	22-Jul-2024	Public	1964	597	Pass	1975.5	1955.7	1995.3	Pass	589.0	577.2	600.8	Pass
13	26-Jul-2024	Public	1979	601	Pass	1970.0	1950.3	1989.7	Pass	589.5	577.7	601.3	Pass
14	29-Jul-2024	Public	1963	567	Fails Moisture	1971.0	1951.3	1990.7	Pass	590.8	578.9	602.6	Fail
15	29-Jul-2024	Public	1982	589	Pass	1970.0	1950.3	1989.7	Pass	588.8	577.0	600.5	Pass
16	2-Aug-2024	Public	1989	594	Pass	1972.0	1952.3	1991.7	Pass	588.5	576.7	600.3	Pass
17	5-Aug-2024	Public	1988	597	Pass	1978.3	1958.5	1998.0	Pass	587.8	576.0	599.5	Pass
18	7-Aug-2024	Public	1974	595	Pass	1980.5	1960.7	2000.3	Pass	586.8	575.0	598.5	Pass
19	8-Aug-2024	Public	1966	602	Pass	1983.3	1963.4	2003.1	Pass	593.8	581.9	605.6	Pass
20	9-Aug-2024	Public	1958	596	Fails Density	1979.3	1959.5	1999.0	Fail	597.0	585.1	608.9	Pass
21	9-Aug-2024	Public	1968	599	Pass	1971.5	1951.8	1991.2	Pass	597.5	585.6	609.5	Pass
22	19-Aug-2024	Public	1983	597	Pass	1966.5	1946.8	1986.2	Pass	598.0	586.0	610.0	Pass
23	20-Aug-2024	Public	1972	600	Pass	1968.8	1949.1	1988.4	Pass	598.5	586.5	610.5	Pass
24	21-Aug-2024	Public	1956	601	Pass	1970.3	1950.5	1990.0	Pass	598.0	586.0	610.0	Pass
25	22-Aug-2024	Public	1986	596	Pass	1969.8	1950.1	1989.4	Pass	599.3	587.3	611.2	Pass
26	23-Aug-2024	Public	1976	594	Pass	1974.3	1954.5	1994.0	Pass	598.5	586.5	610.5	Pass
27	26-Aug-2024	Public	1965	597	Pass	1972.5	1952.8	1992.2	Pass	597.8	585.8	609.7	Pass
28	27-Aug-2024	Public	1979	533	Fails Moisture	1970.8	1951.0	1990.5	Pass	597.0	585.1	608.9	Fail
29	27-Aug-2024	Public	1964	582	Pass	1976.5	1956.7	1996.3	Pass	580.0	568.4	591.6	Pass
30	28-Aug-2024	Public	1955	590	Fails Moisture	1971.0	1951.3	1990.7	Pass	576.5	565.0	588.0	Fail
31	28-Aug-2024	Public	1959	587	Pass	1965.8	1946.1	1985.4	Pass	575.5	564.0	587.0	Pass
32	29-Aug-2024	Public	1955	578	Pass	1964.3	1944.6	1983.9	Pass	573.0	561.5	584.5	Pass
33	3-Sep-2024	Public	1980	598	Fails BOTH	1958.3	1938.7	1977.8	Fail	584.3	572.6	595.9	Fail
34	3-Sep-2024	Public	1972	598	Pass	1962.3	1942.6	1981.9	Pass	588.3	576.5	600.0	Pass
35	4-Sep-2024	Public	1983	599	Pass	1966.5	1946.8	1986.2	Pass	590.3	578.4	602.1	Pass
36	5-Sep-2024	Public	1979	597	Pass	1972.5	1952.8	1992.2	Pass	593.3	581.4	605.1	Pass
37	6-Sep-2024	Public	1984	602	Pass	1978.5	1958.7	1998.3	Pass	598.0	586.0	610.0	Pass
38	11-Sep-2024	Public	1985	597	Pass	1979.5	1959.7	1999.3	Pass	599.0	587.0	611.0	Pass
39	13-Sep-2024	Public	1970	605	Pass	1982.8	1962.9	2002.6	Pass	598.8	586.8	610.7	Pass
40	16-Sep-2024	Public	1961	595	Pass	1979.5	1959.7	1999.3	Pass	600.3	588.2	612.3	Pass
41	17-Sep-2024	Public	1962	600	Pass	1975.0	1955.3	1994.8	Pass	599.8	587.8	611.7	Pass
42	18-Sep-2024	Public	1974	601	Pass	1969.5	1949.8	1989.2	Pass	599.3	587.3	611.2	Pass

Table 4. Clay Soil Laboratory Test Results
Ames Steam Electric Plant - Ash Pond Closure
SCS Engineers Project #27219356.02

Date Tested	Sample Number	ASTM D698 Standard Proctor Density		ASTM D6913, D7928 Grain Size Analysis		ASTM D4318 Atterberg Limits (%)			ASTM D5084 Falling Head Test	ASTM D2487 USCS Classification
		Maximum Dry Density (pcf)	Optimum Moisture Content (%)	% Passing #200	% Retained #4	Liquid Limit	Plastic Limit	Plasticity Index	Coefficient of Permeability (cm/sec)	
Clay Fill										
***Source Testing**										
6/6/2024	Proctor #1 (Elder Borrow, -3' to -6')	120.6	11.4	48.2%	5.9%	24	14	10	$7.9x10^{-7}$	SC
6/6/2024	Proctor #3 - (Elder Borrow, -10')	122.3	10.7	53.0%	0.8%	26	14	12	$1.1x10^{-7}$	CL
8/30/2024	Clay Fill Grab 2 (Orange)	121.2	12.2	58.2%	0.9%	30	15	15	$6.1x10^{-8}$	CL
Representative (Bulk) Samples										
8/28/2024	Clay Fill Grab 1	120.6	12.0	48.4%	3.3%	32	18	14	-	SC
8/30/2024	Clay Fill Grab 2	121.2	12.2	58.2%	0.9%	30	15	15	-	CL
9/17/2024	Clay Fill Grab 3	114.5	14.5	49.8%	5.4%	32	17	15	-	SC
9/18/2024	Clay Fill Grab 4	115.3	13.0	58.7%	1.7%	30	15	15	-	CL
9/18/2024	Clay Fill Grab 5	119.3	11.6	47.1%	1.3%	26	15	11	-	SC
Clay Liner										
***Source Testing**										
6/6/2024	Proctor #3 - (Elder Borrow, -10')	122.3	10.7	53.0%	0.8%	14	26	12	$1.1x10^{-7}$	CL
8/30/2024	**Clay Fill Grab 2 (Orange)	121.2	12.2	58.2%	0.9%	30	15	15	$6.1x10^{-8}$	CL
Representative (Bulk) Samples										
9/18/2024	Clay Liner Grab 1	120.4	11.7	58.0%	2.3%	30	15	15	-	CL
Acceptance Criteria										
-	Clay Fill	-	-	***>50%	<25%	-	-	-	-	***SC/CL/CH
-	Clay Liner	-	-	>50%	<25%	-	-	-	$1.0x10^{-5}$	CL/CH

*Source Testing samples colleceted by contractor, resulting in some labeling inconsistency between SCS and Contractor samples
**Material used for liner construction
***Based on lab results of Proctor #1 (Elder Borrow, -3' to -6'), SC soil type was allowed for clay fill

Data Entered By: CTC, 1/2/25
Checked: MRK 9/28/25

G:\Project\27219356.02\Construction Documentation Report\Tables\[_Table 4 - Clay Soil Properties Test Results.xlsx]5 - Clay Properties

Table 5. Separation Berm Clay Liner In-Situ Sample Laboratory Test Results

Ames Steam Electric Plant - Ash Pond Closure

SCS Engineers Project #27219356.02

Date Tested	Sample ID	Lift No.	Sample Type	ASTM D5084 Coefficient of Permeability (cm/sec)
9/13/2024	ST-1R	2	Shelby Tube	2.4E-08
9/13/2024	ST-2R	2	Shelby Tube	2.4E-08
9/13/2024	ST-3	4	Shelby Tube	2.4E-08
9/13/2024	ST-4	4	Shelby Tube	2.7E-08
9/13/2024	ST-5	6	Shelby Tube	2.4E-08
Requirement				≤1.0E-05
Average				2.5E-08
Standard Deviation				1.3E-09
High				2.7E-08
Low				2.4E-08

Data Entered By: CTC, 12/31/24

Checked: MRK 9/28/2025

Table 6. Closure Area Final Cover Grade Table

Ames Steam Electric Plant - Ash Pond Closure

SCS Engineers Project #27219356.02

Documentation Point Number	Location		Top of Ash	Top of Final Cover		Description
	Northing	Easting	Documented Elev. (ft)	Documented Elev. (ft)	Documented Thickness (ft)	
105	3,473,927.1	4,894,334.3	896.4	898.5	2.1	Toe of Ash Slope
106	3,473,927.4	4,894,434.3	896.0	898.1	2.1	Toe of Ash Slope
107	3,473,928.4	4,894,534.2	895.4	897.4	2.0	Toe of Ash Slope
108	3,473,894.0	4,894,237.9	896.9	899.1	2.2	Toe of Ash Slope
110	3,473,902.1	4,894,334.3	902.6	904.6	2.0	10:1 to 4:1 Slope Grade Break
111	3,473,900.7	4,894,434.3	902.8	904.8	2.0	10:1 to 4:1 Slope Grade Break
112	3,473,901.0	4,894,534.3	902.5	904.6	2.1	10:1 to 4:1 Slope Grade Break
113	3,473,892.7	4,894,606.0	902.9	905.0	2.1	10:1 to 4:1 Slope Grade Break
114	3,473,897.9	4,894,630.0	895.7	901.8	6.1	Toe of Ash Slope
115	3,473,800.6	4,894,236.6	897.3	899.3	2.0	Toe of Ash Slope
116	3,473,800.3	4,894,259.3	902.7	904.7	2.0	10:1 to 4:1 Slope Grade Break
117	3,473,799.9	4,894,334.3	910.0	912.2	2.2	100-foot Grid Point
118	3,473,799.2	4,894,434.3	912.7	914.7	2.0	100-foot Grid Point
119	3,473,798.5	4,894,534.2	910.2	912.2	2.0	100-foot Grid Point
120	3,473,798.1	4,894,611.8	902.5	904.6	2.0	10:1 to 4:1 Slope Grade Break
121	3,473,797.8	4,894,631.7	896.6	900.3	3.7	Toe of Ash Slope
122	3,473,700.6	4,894,237.7	897.8	899.9	2.1	Toe of Ash Slope
123	3,473,700.4	4,894,257.6	902.6	904.6	2.0	10:1 to 4:1 Slope Grade Break
124	3,473,700.0	4,894,334.2	910.1	912.1	2.0	100-foot Grid Point
125	3,473,699.4	4,894,434.3	919.8	921.8	2.0	Closure Peak Grade Break
126	3,473,698.4	4,894,534.2	910.1	912.2	2.0	100-foot Grid Point
127	3,473,698.1	4,894,611.6	902.6	906.3	3.7	10:1 to 4:1 Slope Grade Break
128	3,473,697.8	4,894,630.9	896.9	900.0	3.1	Toe of Ash Slope
129	3,473,600.6	4,894,236.2	897.3	899.5	2.2	Toe of Ash Slope
130	3,473,600.4	4,894,255.7	902.4	904.5	2.0	10:1 to 4:1 Slope Grade Break
131	3,473,599.9	4,894,334.2	910.2	912.3	2.0	100-foot Grid Point
132	3,473,599.4	4,894,434.2	913.8	915.8	2.0	100-foot Grid Point
133	3,473,598.4	4,894,534.2	910.1	912.1	2.1	100-foot Grid Point
134	3,473,598.0	4,894,611.3	902.5	904.5	2.0	10:1 to 4:1 Slope Grade Break
135	3,473,597.8	4,894,630.0	896.8	901.5	4.7	Toe of Ash Slope
137	3,473,500.2	4,894,268.8	904.0	906.0	2.0	10:1 to 4:1 Slope Grade Break
138	3,473,502.1	4,894,334.2	904.2	906.3	2.1	10:1 to 4:1 Slope Grade Break
139	3,473,503.9	4,894,434.3	904.3	906.4	2.0	10:1 to 4:1 Slope Grade Break
140	3,473,530.7	4,894,534.2	906.9	908.9	2.0	10:1 to 4:1 Slope Grade Break
142	3,473,499.8	4,894,623.2	895.8	900.3	4.5	Toe of Ash Slope
143	3,473,472.1	4,894,334.3	896.0	898.0	2.0	Toe of Ash Slope
144	3,473,472.9	4,894,434.3	895.9	898.0	2.1	Toe of Ash Slope
145	3,473,479.4	4,894,534.3	895.6	897.6	2.0	Toe of Ash Slope
146	3,473,827.2	4,894,334.3	909.9	911.9	2.0	N-W Slope Grade Break
147	3,473,799.8	4,894,361.2	912.7	914.8	2.1	N-W Slope Grade Break
148	3,473,725.2	4,894,434.3	919.9	921.9	2.0	Closure Peak Grade Break
149	3,473,798.7	4,894,509.9	912.6	914.6	2.0	N-E Slope Grade Break
150	3,473,823.0	4,894,534.5	910.1	912.2	2.1	N-E Slope Grade Break
151	3,473,562.7	4,894,333.5	910.2	912.3	2.0	S-W Slope Grade Break
152	3,473,599.7	4,894,371.1	913.8	915.9	2.1	S-W Slope Grade Break
153	3,473,663.2	4,894,434.3	919.9	921.9	2.0	Closure Peak Grade Break
154	3,473,598.7	4,894,499.3	913.6	915.7	2.1	S-E Slope Grade Break
155	3,473,564.0	4,894,534.3	910.1	912.2	2.0	S-E Slope Grade Break

Table 6. Closure Area Final Cover Grade Table
Ames Steam Electric Plant - Ash Pond Closure
SCS Engineers Project #27219356.02

Documentation Point Number	Location		Top of Ash	Top of Final Cover		Description
	Northing	Easting	Documented Elev. (ft)	Documented Elev. (ft)	Documented Thickness (ft)	
156	3,473,898.3	4,894,594.3	902.7	904.8	2.1	10:1 to 4:1 Slope Grade Break
157	3,473,925.7	4,894,596.4	895.2	897.3	2.1	Toe of Ash Slope
158	3,473,925.9	4,894,610.9	895.1	897.2	2.1	Toe of Ash Slope
159	3,473,916.9	4,894,625.1	894.9	898.3	3.4	Toe of Ash Slope
160	3,473,906.9	4,894,628.6	894.9	902.4	7.5	Toe of Ash Slope
161	3,473,885.7	4,894,631.5	896.4	900.8	4.4	Toe of Ash Slope
162	3,473,885.7	4,894,611.6	902.6	904.7	2.1	10:1 to 4:1 Slope Grade Break
163	3,473,527.8	4,894,627.5	896.4	901.3	4.9	Toe of Ash Slope
165	3,473,475.5	4,894,500.0	895.6	897.6	2.0	Toe of Ash Slope
166	3,473,520.3	4,894,501.6	905.8	907.8	2.0	10:1 to 4:1 Slope Grade Break
167	3,473,530.6	4,894,567.9	906.2	908.2	2.0	10:1 to 4:1 Slope Grade Break
168	3,473,483.3	4,894,566.8	895.1	897.3	2.2	Toe of Ash Slope
169	3,473,485.3	4,894,602.3	895.1	897.8	2.7	Toe of Ash Slope
170	3,473,490.7	4,894,617.3	895.6	897.8	2.2	Toe of Ash Slope
171	3,473,513.2	4,894,626.9	896.1	900.9	4.8	Toe of Ash Slope
172	3,473,524.5	4,894,594.7	904.1	906.1	2.0	10:1 to 4:1 Slope Grade Break
173	3,473,472.7	4,894,267.4	896.7	898.8	2.0	Toe of Ash Slope
174	3,473,480.7	4,894,246.9	896.8	898.9	2.1	Toe of Ash Slope
175	3,473,499.8	4,894,261.7	903.2	905.2	2.0	10:1 to 4:1 Slope Grade Break
176	3,473,505.4	4,894,257.4	902.8	904.8	2.0	10:1 to 4:1 Slope Grade Break
177	3,473,509.2	4,894,255.5	902.5	904.6	2.1	10:1 to 4:1 Slope Grade Break
178	3,473,508.7	4,894,234.5	897.0	899.2	2.2	Toe of Ash Slope
179	3,473,498.4	4,894,235.4	897.1	899.1	2.0	Toe of Ash Slope
180	3,473,488.3	4,894,239.3	896.9	899.3	2.4	Toe of Ash Slope
181	3,473,907.0	4,894,241.2	896.7	899.0	2.3	Toe of Ash Slope
182	3,473,916.1	4,894,249.0	896.5	898.6	2.1	Toe of Ash Slope
183	3,473,922.1	4,894,260.5	896.9	898.9	2.1	Toe of Ash Slope
184	3,473,924.1	4,894,273.1	896.7	898.8	2.1	Toe of Ash Slope
185	3,473,903.2	4,894,273.9	902.4	904.5	2.0	10:1 to 4:1 Slope Grade Break
186	3,473,898.4	4,894,260.5	902.4	904.3	2.0	10:1 to 4:1 Slope Grade Break
187	3,473,891.0	4,894,258.5	902.5	904.6	2.1	10:1 to 4:1 Slope Grade Break
188	3,473,928.4	4,894,628.9	894.5	896.5	2.0	NE Corner Edge of Ash

Prepared by: CTC 6/25/25
Checked by: MRK 9/28/25

Figures

1 Separation Berm Clay Fill Testing Locations – Lifts 1 through 22
2 Separation Berm Clay Liner Testing and Sampling Locations – Lifts 1 through 6
3 Separation Berm Clay Liner Thickness Verification Points
4 Final Cover Thickness Verification Survey Grid

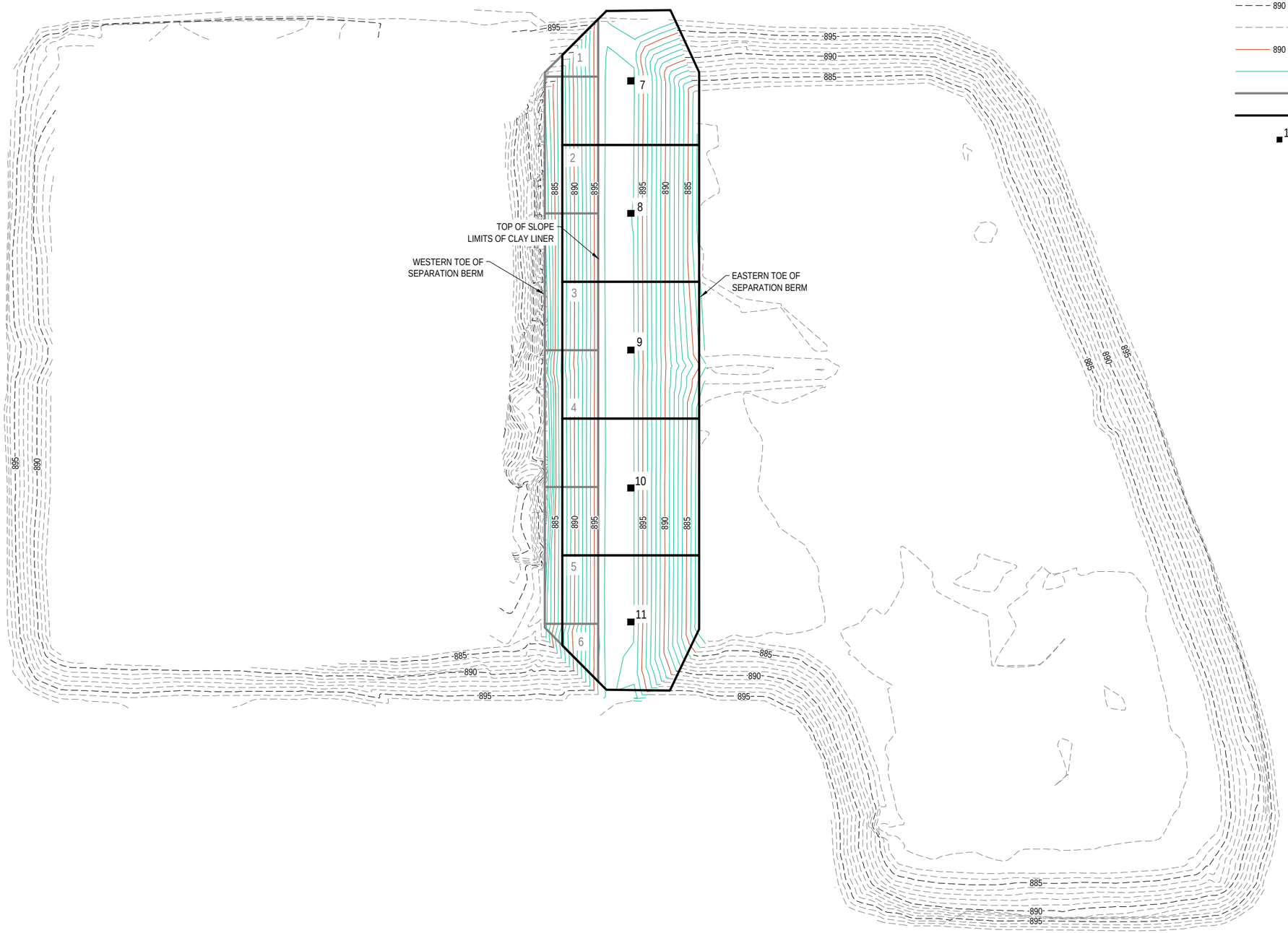

LEGEND:

- 890 — DOCUMENTED EXCAVATION GRADES 5' CONTOUR
- DOCUMENTED EXCAVATION GRADES 1' CONTOUR
- 890 — DOCUMENTED SEPARATION BERM GRADES 5' CONTOUR
- DOCUMENTED SEPARATION BERM GRADES 1' CONTOUR
- CLAY LINER TESTING GRID
- CLAY FILL TESTING GRID
- ■1 CLAY FILL FIELD MOISTURE/DENSITY TEST GRID NUMBER

40 0 40 80
SCALE FEET

NOTES:

1. TEST WERE CONDUCTED WITHIN THE INDICATED GRID. LOCATIONS WITHIN THE GRID WERE NOT NOTED FOR CLAY FILL.
2. CLAY FILL TESTING RESULTS ARE SHOWN ON TABLE 3.
3. GRIDS 1-6 ARE USED FOR CLAY LINER TESTING. DUE TO THE GEOMETRY OF THE BERM, OVERLAP OCCURRED BETWEEN CLAY FILL TEST GRIDS AND CLAY LINER TEST GRIDS.

REV.	DATE	CK. BY
1		
2		
3		
4		
5		
6		

SHEET TITLE
SEPARATION BERM CLAY FILL TESTING LOCATIONS

PROJECT TITLE
CONSTRUCTION DOCUMENTATION
ASH POND CLOSURE

CLIENT
AMES MUNICIPAL ELECTRIC SYSTEM
STEAM ELECTRIC PLANT
200 EAST 5TH STREET
AMES, IOWA 50010

SCS ENGINEERS
1690 All-State Court, Suite 100
West Des Moines, IA 50265
PH: (515) 631-6160 FAX: (913) 681-0012

PROJ. NO.	DSN. BY:	DWN. BY:	CHK. BY:	QA/QC BY:	PROJ. MGR
27219356.02	CTC	CTC	MRK	MRK	MRS

CADD FILE:
FIGURE 1_SEPARATION BERM CLAY FILL TESTING.DWG

DATE:
10/3/25

FIGURE NO.
1

G:\PROJECT\27219356.02\AUTOCAD\CONSTRUCTION DOCUMENTATION\FIGURES\FIGURE 1_SEPARATION BERM CLAY FILL TESTING.DWG

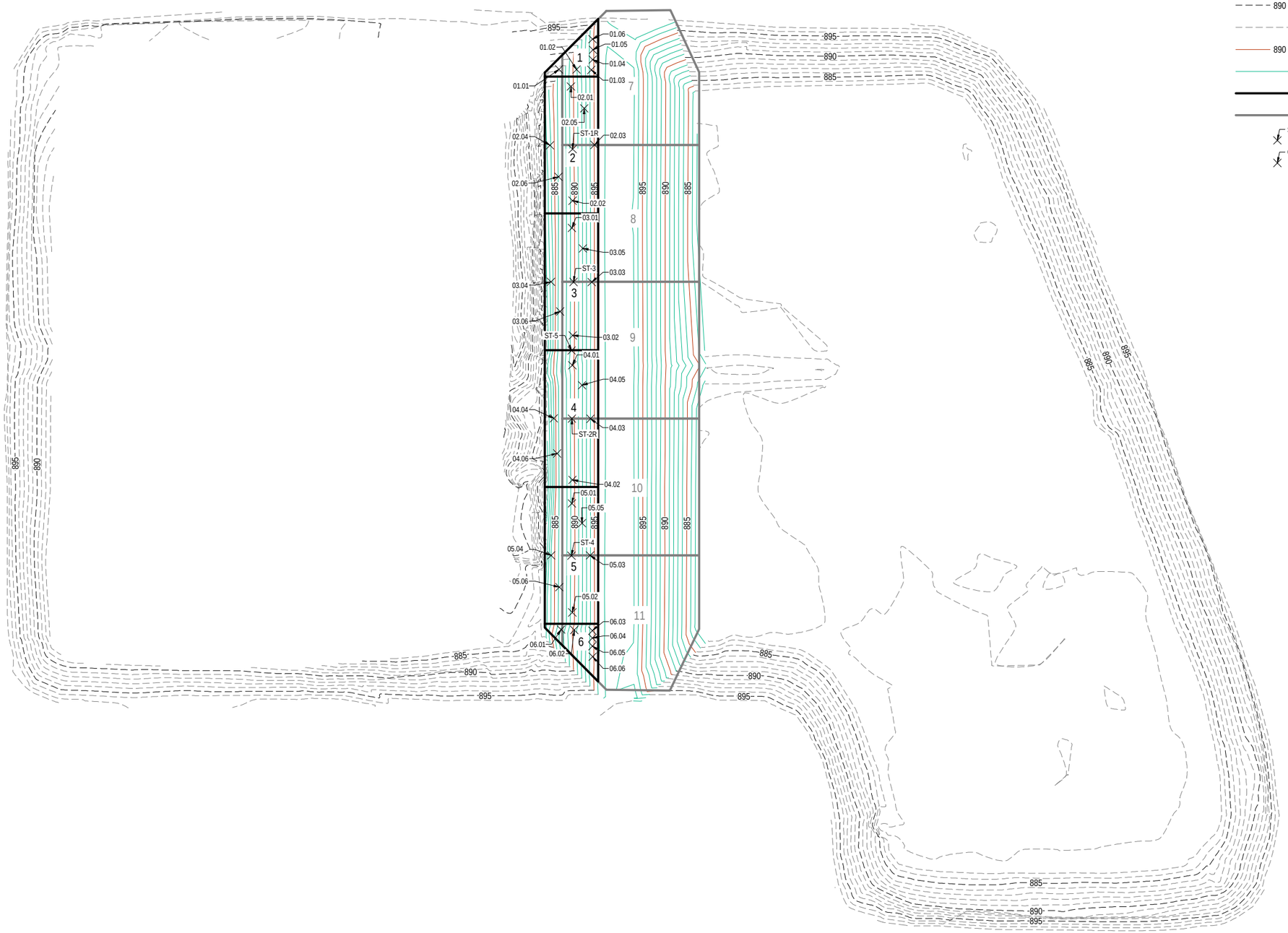

LEGEND:

- 890 DOCUMENTED EXCAVATION GRADES 5' CONTOUR
- DOCUMENTED EXCAVATION GRADES 1' CONTOUR
- 890 DOCUMENTED SEPARATION BERM GRADES 5' CONTOUR
- DOCUMENTED SEPARATION BERM GRADES 1' CONTOUR
- CLAY LINER TESTING GRID
- CLAY FILL TESTING GRID
- ST- # CLAY LINER SAMPLE LOCATION (SHELBY TUBE)
- GRID # . LIFT # CLAY LINER FIELD MOISTURE/DENSITY TEST LOCATION

40 0 40 80
SCALE FEET

NOTES:

1. TEST LOCATIONS ARE APPROXIMATE, EACH TEST WAS GENERALLY CONDUCTED AT THE LOCATION INDICATED ON THIS FIGURE.
2. CLAY LINER TESTING RESULTS ARE SHOWN ON TABLE 3.
3. GRIDS 7-11 ARE USED FOR CLAY FILL TESTING. DUE TO THE GEOMETRY OF THE BERM, OVERLAP OCCURRED BETWEEN CLAY FILL TEST GRIDS AND CLAY LINER TEST GRIDS.

REV.	DATE	CK. BY

SHEET TITLE
SEPARATION BERM CLAY LINER TESTING AND SAMPLING LOCATIONS

PROJECT TITLE
CONSTRUCTION DOCUMENTATION ASH POND CLOSURE

CLIENT
AMES MUNICIPAL ELECTRIC SYSTEM
STEAM ELECTRIC PLANT
200 EAST 5TH STREET
AMES, IOWA 50010

SCS ENGINEERS
1690 All-State Court, Suite 100
West Des Moines, IA 50265
PH: (515) 631-6160 FAX: (913) 681-0012

PROJ. NO.	DWN. BY:	CHK. BY:	QA/QC BY:	PROJ. MGR
27219356.02	CTC	MRK	MRK	MRS
DSN. BY: CTC				

CADD FILE:
FIGURE 2_SEPARATION BERM LINER TESTING.DWG

DATE:
10/3/25

FIGURE NO.
2

G:\PROJECT\27219356.02\AUTOCAD\CONSTRUCTION DOCUMENTATION\FIGURES\FIGURE 2_SEPARATION BERM LINER TESTING.DWG

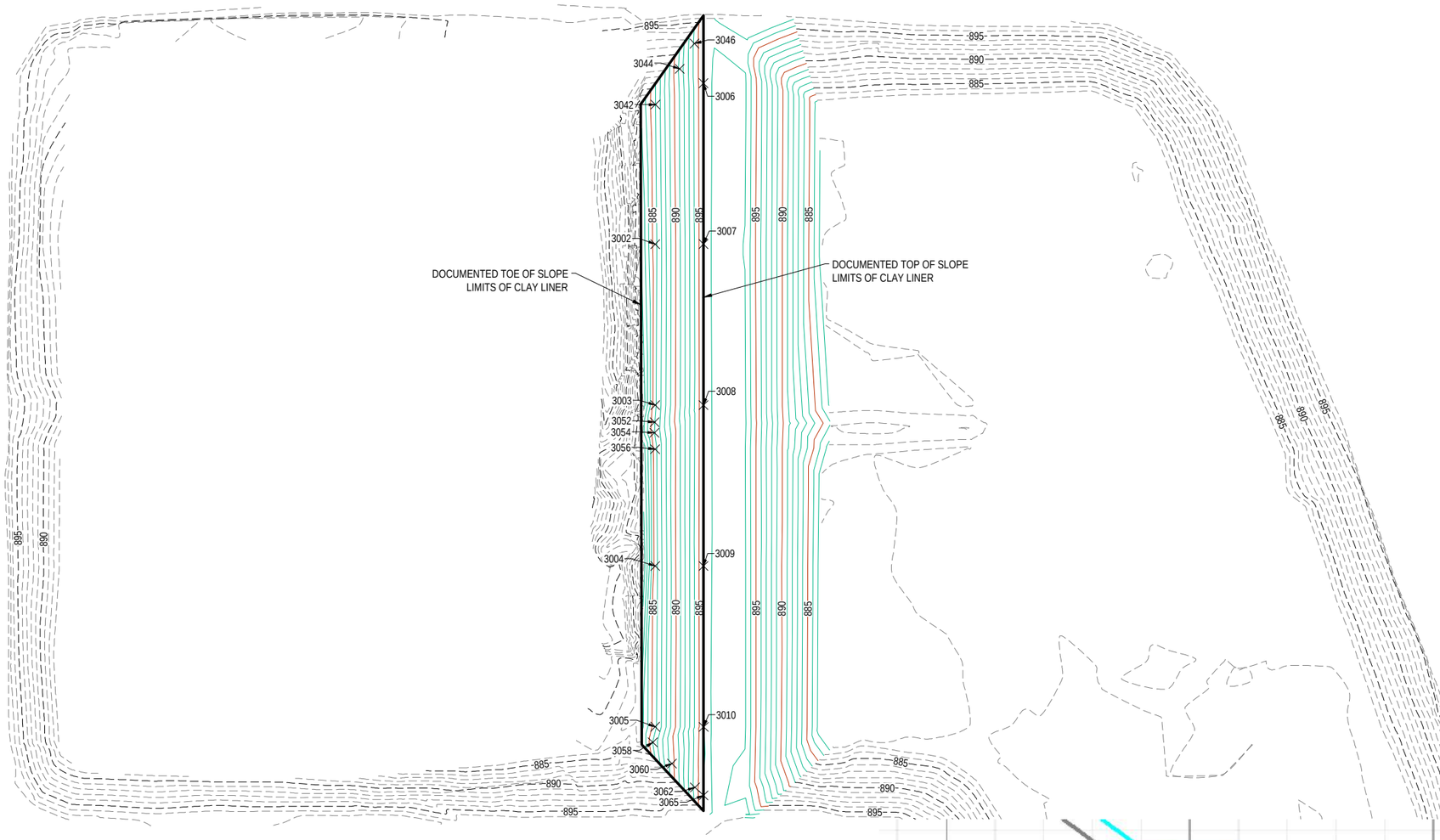

LEGEND:

- 890 — DOCUMENTED EXCAVATION GRADES 5' CONTOUR
- DOCUMENTED EXCAVATION GRADES 1' CONTOUR
- 890 — DOCUMENTED SEPARATION BERM GRADES 5' CONTOUR
- DOCUMENTED SEPARATION BERM GRADES 1' CONTOUR
- DOCUMENTED EXTENTS OF CLAY LINER
- 3000 — CLAY LINER THICKNESS VERIFICATION POINT

40 0 40 80
SCALE FEET

NOTES:

1. POINTS 3002-3005, 3052, 3054, 3056, AND 3058 ARE THE DOCUMENTED WESTERNMOST EDGE OF THE FULL DEPTH NEW CLAY LINER CONSTRUCTION. POINTS 3006-3010 AND 3065 ARE THE DOCUMENTED TOP OF SLOPE OF THE NEW CLAY LINER CONSTRUCTION. ELEVATIONS WERE SURVEYED AT THE BOTTOM AND TOP OF CLAY LINER AT THESE LOCATIONS.
2. DOCUMENTED ELEVATIONS AND CLAY LINER THICKNESS SHOWN ON TABLE 2.

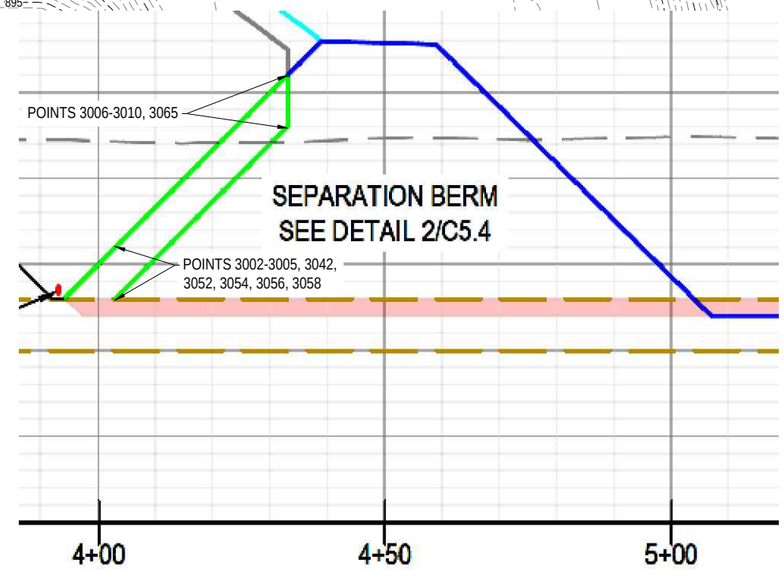

REV:	DATE	CK. BY

SHEET TITLE
SEPARATION BERM CLAY LINER THICKNESS VERIFICATION POINTS

PROJECT TITLE
CONSTRUCTION DOCUMENTATION ASH POND CLOSURE

CLIENT
AMES MUNICIPAL ELECTRIC SYSTEM
STEAM ELECTRIC PLANT
200 EAST 5TH STREET
AMES, IOWA 50010

SCS ENGINEERS
1690 All-State Court, Suite 100
West Des Moines, IA 50265
PH: (515) 631-6160 FAX: (913) 681-0012

PROJ. NO.	DSN. BY:	CHK. BY:	QA/QC BY:	PROJ. MGR
27219356.02	CTC	MRK	MRK	MRS

CADD FILE:
FIGURE 3_CLAY LINER THICKNESS VERIFICATION.DWG

DATE:
10/3/25

FIGURE NO.
3

G:\PROJECT\27219356.02\AUTOCAD\CONSTRUCTION DOCUMENTATION\FIGURES\FIGURE 3_CLAY LINER THICKNESS VERIFICATION.DWG

LEGEND:

- 890 — DOCUMENTED CLOSURE AREA GRADES 5' CONTOUR
- DOCUMENTED CLOSURE AREA GRADES 1' CONTOUR
- 100-FOOT SURVEY GRID
- DOCUMENTED EDGE OF ASH
- 100 — FINAL COVER THICKNESS VERIFICATION POINT

20 0 20 40
SCALE FEET

NOTES:

1. CONTOURS REPRESENT THE TOP OF FINAL COVER IN THE CLOSURE AREA SURVEYED BY SCS ENGINEERS ON JUNE 24, 2025.
2. CLOSURE AREA FINAL COVER GRADES SHOWN ON TABLE 6.

REV.	DATE	CK. BY
	.	.
	.	.
	.	.
	.	.
	.	.
	.	.

SHEET TITLE
FINAL COVER THICKNESS VERIFICATION SURVEY GRID

PROJECT TITLE
CONSTRUCTION DOCUMENTATION
ASH POND CLOSURE

CLIENT
AMES MUNICIPAL ELECTRIC SYSTEM
STEAM ELECTRIC PLANT
200 EAST 5TH STREET
AMES, IOWA 50010

SCS ENGINEERS
1690 All-State Court, Suite 100
West Des Moines, IA 50265
PH: (515) 631-6160 FAX: (913) 681-0012

PROJ. NO.	27219356.02	QA/QC'ED BY:	MRK
DSN. BY:	CTC	PROJ. MGR:	MRS
DWN. BY:	CTC		
CHK. BY:	MRK		

CADD FILE:
FIGURE 4_COVER THICKNESS VERIFICATION.DWG

DATE:
10/3/25

FIGURE NO.
4

G:\PROJECT\27219356.02\AUTOCAD\CONSTRUCTION DOCUMENTATION FIGURES\FIGURE 4_COVER THICKNESS VERIFICATION.DWG

Appendix A

Correspondence, Permits, and Change Orders

A.1 – City of Ames and IDNR Correspondence

Jolly, Becky <becky.jolly@dnr.iowa.gov>

Fwd: Ames - CCR progress report

1 message

Rath, Brian <brian.rath@dnr.iowa.gov> Mon, Aug 5, 2024 at 8:20 AM
To: Becky Jolly <becky.jolly@dnr.iowa.gov>

Becky - Please file under the City of Ames CCR Impoundment. I'll review. Thanks.

Brian Rath, P.E.
Environmental Engineer Senior
Solid Waste and Contaminated Sites Section
Iowa Department of Natural Resources
6200 Park Ave, Suite 200
Des Moines, IA 50321
515-537-4051
brian.rath@dnr.iowa.gov
www.iowadnr.gov

---------- Forwarded message ---------
From: **Evans, Kristin** <kristin.evans@cityofames.org>
Date: Thu, Aug 1, 2024 at 4:06 PM
Subject: Ames - CCR progress report
To: Brian Rath <brian.rath@dnr.iowa.gov>
Cc: Spence, Curtis <Curtis.Spence@cityofames.org>

Brian,

We were just made aware of the requirement for semiannual reporting. Please consider this email and attached field reports as the report due July 31, 2024.

The construction contract was awarded to JB Holland on March 12, 2024. The contractor mobilized on June 3, 2024. The field reports from the consultant's on site representative are attached. If you have any questions or need further information, please let me know.

Kris

Kris Evans Ph.D., P.E.

Power Plant Engineer

502 Carroll Avenue, Ames IA 50010

515.239.5173 direct

kristin.evans@cityofames.org

www.CityofAmes.org

OneDrive_2024-08-01.zip
3175K

DAILY FIELD ACTIVITIES REPORT

Client Name:	Ames Municipal Electric System	**Date:**	July 24, 2024
SCS Engineers Project Name:	Ames Ash Pond Closure	**Start Time:**	8:00 AM
SCS Engineers Project No:	27219356.02	**Stop Time:**	4:30 PM
Project Location:	Ames Municipal Electric System Ash Ponds Ames, Iowa		

Task: *Ash Excavation, Ash Placement, Dewatering*

Weather Information

83°, Cloudy, Winds from W at 6 mph

Contractors, Personnel, and Equipment On Site

Contractors: JB Holland Personnel: 2
Equipment: 1-John Deere 380G LC Excavator, 1-CAT D6N LGP Dozer, 1-MTS 3630T Construction Tractor, John Deere 624K Loader, Bobcat T770 Compact Track Loader, 2-CAT Dump Trucks, 1-Case IH 9280 Tractor, 1-ROME TAW-20S Wheel Offset Disc Harrow, 1-Bobcat E50 R2 Compact Excavator, 1-Fuel Truck, 1-CAT D6T LGP Dozer, 1-Water Truck, 1-CAT CP56B Compactor, 1-SANY SY265C LC Long-Reach Excavator, 1-Hurricane HD3700 Drop Hammer, 1 -John Deere 755D Crawler Loader, 1-John Deere 310 Disk, 1-ROME Disc

Work Areas/Boundaries

Existing Ash Pond

Testing Equipment Used/Observed and Calibration/Re-Calibration Documentation

NA

Tests Completed/Observed

NA

Work Comments/Observations and Test Results

8:00 - The contractor turned on the pump to dewater the southeast corner of the existing ash pond.
8:45 - The contractor used a submersible pump to dewater the low area around the contact water cleanouts in the northwest corner of the closure area. The pump hose discharged into the open end of one of the cleanouts.
9:15 - Crew set up the submersible pump to dewater the area east of the clay fill on the existing pond floor.
9:45 - The contractor used the mini-excavator to remove the wet ash material around the cleanouts in the northwest corner of the closure area.
11:00 - Crew excavated dry ash material from the mound on the west side of the closure area and piled it near the northwest contact water cleanouts.
11:15 - The John Deere 380G excavator experienced mechanical issues and stopped being utilized. The contractor began excavating ash with the John Deere track loader.
11:45 - The contractor began placing a lift of dry ash material in the low area around the cleanouts in the northwest corner of the closure area. The contact water cleanouts were covered with drainage aggregate.
12:45 - Due to limitations with the slope into the low area around the cleanouts, the contractor compacted the first lift of ash with a vibratory plate compactor that was attached to the mini-excavator.
1:15 - The contractor continued placing lifts of dry ash material in the low area around the cleanouts. Subsequent lifts were rolled with the self-propelled compactor. The plate compactor was also used to better compact the area immediately around the cleanouts. Drainage aggregate was placed around the cleanouts with each lift.
2:00 - The contractor finished placing lifts of ash around the cleanouts in the northwest corner of the closure area.
3:00 - The contractor used the dozer to cut several ditches to drain water from the closure area.
4:00 - Crew bailed ash from the southeast corner of the existing ash pond with the long-reach excavator. The excavated ash material was piled in the drying area on the east side of the existing ash pond.
4:15 - The dozer cut a ditch in the east drying area to drain water towards the floor of the pond excavation.
4:30 - SCS left the site.

Material(s) Delivered to Site

NA

Construction Observer

Chris Calhoun

SCS ENGINEERS

DAILY FIELD ACTIVITIES REPORT

Client Name:	Ames Municipal Electric System	**Date:**	July 23, 2024
SCS Engineers Project Name:	Ames Ash Pond Closure	**Start Time:**	7:00 AM
SCS Engineers Project No:	27219356.02	**Stop Time:**	4:30 PM
Project Location:	Ames Municipal Electric System Ash Ponds Ames, Iowa		

Task: *Ash Excavation, Ash Placement, Contact Water Cleanouts, Dewatering*

Weather Information

86°, Partly Cloudy, Rain and thunder starting around 4:30pm, Winds from W at 8 mph

Contractors, Personnel, and Equipment On Site

Contractors: JB Holland Personnel: 5
Equipment: 1-John Deere 380G LC Excavator, 1-CAT D6N LGP Dozer, 1-MTS 3630T Construction Tractor, John Deere 624K Loader, Bobcat T770 Compact Track Loader, 2-CAT Dump Trucks, 1-Case IH 9280 Tractor, 1-ROME TAW-20S Wheel Offset Disc Harrow, 1-Bobcat E50 R2 Compact Excavator, 1-Fuel Truck, 1-CAT D6T LGP Dozer, 1-Water Truck, 1-CAT CP56B Compactor, 1-SANY SY265C LC Long-Reach Excavator, 1-Hurricane HD3700 Drop Hammer, 1 -John Deere 755D Crawler Loader, 1-John Deere 310 Disk, 1-ROME Disc

Work Areas/Boundaries

Existing Ash Pond

Testing Equipment Used/Observed and Calibration/Re-Calibration Documentation

NA

Tests Completed/Observed

NA

Work Comments/Observations and Test Results

7:30 - The contractor worked the ash on the upper level of the closure area. Crew also cut a ditch with a dozer to dewater an area on the west side of the closure area. Water was drained towards the cleanout stubs in the southwest corner of the closure area.
7:30 - Crew continued bailing ash from the southeast corner of the existing ash pond. The excavated ash material was piled in the drying area on the east side of the existing ash pond.
8:30 - The contractor welded additional pipe sections to the contact water cleanout stubs in the southwest corner of the closure area.
8:45 - Crew disked the ash on the west side of the closure area.
9:00 - A John Deere 755D track loader and two disks were mobilized to the site.
9:00 - The contractor extended the contact water cleanouts in the northwest corner of the closure area.
10:00 - Crew used the long-reach excavator to transfer the excavated ash material from the east drying area to the containment pit on the west side of the drying area. The long-reach operator continued bailing ash from the southeast corner of the existing ash pond and transferring the excavated material to the west containment pit for the remainder of the day.
10:30 - The contractor worked to dewater the bottom of the separation berm excavation.
11:00 - Crew dewatered the southwest corner of the closure area around the contact water cleanouts.
11:45 - The contractor began placing a lift of dry ash material in the low area around the cleanouts in the southwest corner of the closure area. The dry material was taken from the mound on the west side of the closure area. Drainage aggregate was placed around the contact water cleanouts.
12:45 - The contractor rolled the self propelled compactor over the lift placed around the contact water cleanouts. Crew continued placing and compacting lifts of ash in the low area around the cleanouts until the grade was level with the remainder of the west trench. Drainage aggregate was placed around the cleanouts with each lift.
2:30 - Crew used a dozer to smooth out the clay fill on the floor of the separation berm exacavation.
3:45 - Crew used a dozer to smooth out the material on the west side of the closure area.
3:15 - The contractor finished placing lifts of ash around the cleanouts in the southwest corner of the closure area.
4:15 - Rain and thunder moving into the area.
4:30 - SCS left the site and the contractor paused work. Once the rain subsided, the contractor turned on pumps to dewater.

Material(s) Delivered to Site

NA

Construction Observer

Chris Calhoun

SCS ENGINEERS

DAILY FIELD ACTIVITIES REPORT

Client Name:	Ames Municipal Electric System	**Date:**	July 22, 2024
SCS Engineers Project Name:	Ames Ash Pond Closure	**Start Time:**	8:00 AM
SCS Engineers Project No:	27219356.02	**Stop Time:**	3:30 PM
Project Location:	Ames Municipal Electric System Ash Ponds Ames, Iowa		

Task: *Ash Excavation, Ash Placement, Proof Roll, Clay Compaction*

Weather Information

83°, Partly Cloudy, Rain and thunder starting at 3:00pm, Winds from NW at 10 mph

Contractors, Personnel, and Equipment On Site

Contractors: JB Holland Personnel: 6
Equipment: 1-John Deere 380G LC Excavator, 1-CAT D6N LGP Dozer, 1-MTS 3630T Construction Tractor, John Deere 624K Loader, Bobcat T770 Compact Track Loader, 2-CAT Dump Trucks, 1-Case IH 9280 Tractor, 1-ROME TAW-20S Wheel Offset Disc Harrow, 1-Bobcat E50 R2 Compact Excavator, 1-Fuel Truck, 1-CAT D6T LGP Dozer, 1-Water Truck, 1-CAT CP56B Compactor, 1-SANY SY265C LC Long-Reach Excavator, 1-Hurricane HD3700 Drop Hammer

Work Areas/Boundaries

Existing Ash Pond

Testing Equipment Used/Observed and Calibration/Re-Calibration Documentation

Nuclear Density Gauge - Standard Calibration

Tests Completed/Observed

NA

Work Comments/Observations and Test Results

8:15 - SCS met with City of Ames staff to discuss the items found near the top of the south sideslope the week prior. It was determined that the 4" PVC pipe and the 0.5" metal grounding rod were related to the transformer that was previously removed near this location. The origins of the gravel hole are still unknown.
8:45 - The contractor continued excavation for the separation berm. Excavated material was piled in the drying area on the east side of the existing ash pond.
8:45 - Crew used a dozer to turn over the clay fill on the pond floor.
9:00 - The contractor set up pumps to dewater several areas on the pond floor.
9:30 - The contractor rolled the west side of the closure area with the self propelled compactor.
10:00 - A proof roll was performed on the west side of the closure area where previous proof rolls have failed. The proof roll passed.
10:15 - The contractor began hauling dry excavated material to the west side of the closure area. The material was spread out with a dozer.
11:00 - Crew utilized a dozer to work the ash on the upper level of the closure area.
11:30 - The contractor disked the ash that was placed on the west side of the closure area.
12:45 - Crew rolled the clay fill on the pond floor with the pull-behind compactor.
1:15 - The contractor bailed material out of the southeast corner of the existing ash pond with a dozer and the long-reach excavator.
1:45 - SCS performed the daily standard calibration for the nuclear density gauge.
2:30 - Crew rolled the clay fill on the pond floor with the self-propelled compactor.
3:00 - Rain and thunder moving into the area.
3:30 - The contractor called work for the day due to the weather conditions. SCS and the contractor left the site.

Material(s) Delivered to Site

NA

Construction Observer

Chris Calhoun

SCS ENGINEERS

DAILY FIELD ACTIVITIES REPORT

Client Name:	Ames Municipal Electric System	**Date:**	July 19, 2024
SCS Engineers Project Name:	Ames Ash Pond Closure	**Start Time:**	7:00 AM
SCS Engineers Project No:	27219356.02	**Stop Time:**	4:00 PM
Project Location:	Ames Municipal Electric System Ash Ponds Ames, Iowa		

Task: *Clay Import, Clay Compaction Testing*

Weather Information

80°, Fair, Winds from S at 9 mph

Contractors, Personnel, and Equipment On Site

Contractors: JB Holland Personnel: 6
Equipment: 1-John Deere 380G LC Excavator, 1-CAT D6N LGP Dozer, 1-MTS 3630T Construction Tractor, John Deere 624K Loader, Bobcat T770 Compact Track Loader, 2-CAT Dump Trucks, 1-Case IH 9280 Tractor, 1-ROME TAW-20S Wheel Offset Disc Harrow, 1-Bobcat E50 R2 Compact Excavator, 1-Fuel Truck, 1-CAT D6T LGP Dozer, 1-Water Truck, 1-CAT CP56B Compactor, 1-SANY SY265C LC Long-Reach Excavator, 1-Hurricane HD3700 Drop Hammer

Work Areas/Boundaries

Existing Ash Pond

Testing Equipment Used/Observed and Calibration/Re-Calibration Documentation

Nuclear Density Gauge - Standard Calibration

Tests Completed/Observed

3 clay fill compaction tests completed on pond floor.

Work Comments/Observations and Test Results

7:15 - Trucks began delivering clay to the site. The clay material was dumped at the top of the north sideslope. The contractor applied water to the perimeter roads for dust control.
7:15 - The contractor worked the wet ash material on the upper level of the closure area with a dozer.
7:30 - Crew began pushing clay down the north sideslope and across the pond floor with dozers.
7:45 - Crew disked the ash in the drying areas on the east side of the existing ash pond and the west side of the closure area.
8:00 - The contractor cleaned up the perimeter roads with a skidloader.
8:45 - SCS staff met with City of Ames staff to discuss the items discovered near the top of the south sideslope the day prior. It was determined that the 4" pvc pipe and metal rod were most likely related to the transformer previously located in this area. City of Ames still reviewing.
9:30 - The contractor continued cleaning out the sump hole on the pond floor near the contact water collection area with the mini-excavator.
11:00 - The contractor used the long-reach excavator to bail ash material from the southeast corner of the existing ash pond.
11:30 - SCS staff finished surveying the excavation areas that had been cleared as clean. SCS staff also surveyed as-built points for the clay liner on the pond floor and the south sideslope.
1:15 - SCS staff performed the daily standard calibration for the nuclear density gauge.
1:45 - The contractor rolled the clay with the pull-behind compactor.
2:00 - Clay delivery ended for the day.
2:15 - The contractor rolled the clay with the self-propelled compactor.
2:45 - SCS staff performed clay fill compaction tests with the nuclear density gauge. One test passed and two tests failed.
3:30 - Crew used a dozer to push some clay material back up from the floor to the top of the north sideslope. The other dozer operator leveled out the drying area on the east side of the existing ash pond.
4:00 - The contractor made final preparations to leave for the weekend. SCS staff left the site.

Material(s) Delivered to Site

Clay Fill

Construction Observer

Chris Calhoun, Brandon Suchomel

SCS ENGINEERS

DAILY FIELD ACTIVITIES REPORT

Client Name:	Ames Municipal Electric System	**Date:**	July 18, 2024
SCS Engineers Project Name:	Ames Ash Pond Closure	**Start Time:**	7:00 AM
SCS Engineers Project No:	27219356.02	**Stop Time:**	7:30 PM
Project Location:	Ames Municipal Electric System Ash Ponds Ames, Iowa		

Task: *Ash Excavation, Ash Placement, Cleaned Excavation Clearing, Concrete Pad Removal*

Weather Information

78°, Fair, Winds from E at 8 mph

Contractors, Personnel, and Equipment On Site

Contractors: JB Holland Personnel: 7
Equipment: 1-John Deere 380G LC Excavator, 1-CAT D6N LGP Dozer, 1-MTS 3630T Construction Tractor, John Deere 624K Loader, Bobcat T770 Compact Track Loader, 2-CAT Dump Trucks, 1-Case IH 9280 Tractor, 1-ROME TAW-20S Wheel Offset Disc Harrow, 1-Bobcat E50 R2 Compact Excavator, 1-Fuel Truck, 1-CAT D6T LGP Dozer, 1-Water Truck, 1-CAT CP56B Compactor, 1-SANY SY265C LC Long-Reach Excavator, 1-Hurricane HD3700 Drop Hammer, 1- John Deere 7800 Tractor, 1-Pull-behind sheepsfoot compactor with 7" pad length

Work Areas/Boundaries

Existing Ash Pond

Testing Equipment Used/Observed and Calibration/Re-Calibration Documentation

Nuclear Density Gauge - Daily Standard Calibration

Tests Completed/Observed

Three sample compaction tests were completed with the nuclear density gauge.

Work Comments/Observations and Test Results

7:00 - The contractor continued excavation for the proposed separation berm. Some dry material was piled in the northern trench section of the closure area. The remainder of the excavated material was dumped in the containment pit on the east side of the existing ash pond.
7:30 - Crew worked on cleaning the south sideslope with a dozer.
7:30 - The contractor used the long-reach excavator to move material around in the north containment pit, creating additional space to dump material.
8:45 - Crew used a dozer to spread out the material placed in the trench on the north side of the closure area.
9:30 - The contractor began dumping excavated material in the north containment pit.
11:00 - SCS staff and the contractor had a discussion about the condition of the exterior roads and potential operational adjustments to keep the roads as clean and well maintained as possible.
11:45 - SCS staff and the contractor assessed the need to remove an additional portion of the concrete pad. It was determined that additional concrete should be removed until the clay liner at the top of the slope could be clearly identified for confirmation of ash removal.
12:00 - Crew began breaking up additional concrete with a drop hammer. An excavator removed the broken concrete.
1:30 - Performed the standard calibration for the nuclear density gauge.
1:45 - The tractor with the pull-behind compactor began rolling the clay on the pond floor. The tractor experienced a flat tire and the wheel was damaged.
2:15 - Crew used a skidloader to clean the perimeter roads.
2:45 - The contractor rolled the clay with the self-propelled compactor.
3:15 - SCS staff performed three sample clay compaction tests. Two tests were above the upper threshold for moisture content and low on percent compaction. The third sample test passed compaction and moisture requirements.
4:15 - The contractor worked on cleaning out the sump on the pond floor near the contact water storage area.
5:00 - SCS staff began inspecting the south side of the separation berm excavation to clear as clean.
5:15 - While cleaning near the top of the south sideslope, several items were discovered. 1) Ash material extending under access road adjacent to the top of the south sideslope. 2) A hole, approximately 1' in diameter and greater than 1' in depth, filled with pea gravel and sand material. 3) A 4" PVC pipe extending through the clay liner running from northeast to southwest. 4) A 0.5" diameter metal rod sticking out vertically from the top of the clay liner.
6:00 - SCS staff began surveying the clean cleared sections of the pond excavation.
7:00 - The contractor ran the water truck around the perimeter roads to help with dust control.

Material(s) Delivered to Site

Drainage Aggregate

Construction Observer

Chris Calhoun, Brandon Suchomel

SCS ENGINEERS

DAILY FIELD ACTIVITIES REPORT

Client Name:	Ames Municipal Electric System	**Date:**	July 17, 2024
SCS Engineers Project Name:	Ames Ash Pond Closure	**Start Time:**	7:00 AM
SCS Engineers Project No:	27219356.02	**Stop Time:**	7:00 PM
Project Location:	Ames Municipal Electric System Ash Ponds Ames, Iowa		

Task: *Ash Excavation, Ash Placement, Cleaned Excavation Clearing, Concrete Pad Removal*

Weather Information

80°, Sunny, Winds from NW at 12 mph

Contractors, Personnel, and Equipment On Site

Contractors: JB Holland Personnel: 7
Equipment: 1-John Deere 380G LC Excavator, 1-CAT D6N LGP Dozer, 1-MTS 3630T Construction Tractor, John Deere 624K Loader, Bobcat T770 Compact Track Loader, 2-CAT Dump Trucks, 1-Case IH 9280 Tractor, 1-ROME TAW-20S Wheel Offset Disc Harrow, 1-Bobcat E50 R2 Compact Excavator, 1-Fuel Truck, 1-CAT D6T LGP Dozer, 1-Water Truck, 1-CAT CP56B Compactor, 1-SANY SY265C LC Long-Reach Excavator, 1-Hurricane HD3700 Drop Hammer, 1- John Deere 7800 Tractor, 1-Pull-behind sheepsfoot compactor with 7" pad length

Work Areas/Boundaries

Existing Ash Pond

Testing Equipment Used/Observed and Calibration/Re-Calibration Documentation

NA

Tests Completed/Observed

NA

Work Comments/Observations and Test Results

7:00 - The contractor continued excavation for the proposed separation berm. Excavated ash was hauled and dumped in the containment pit on the east side of the existing ash pond.
7:15 - The contractor used the long-reach excavator to work the ash in the east containment pit and create additional space for dumping material.
7:30 - Crew disked the ash on the west side of the closure area.
8:00 - SCS staff had a discussion with the contractor about methods for cleaning the floor of the existing pond and excavation to clean vs. design.
9:00 - The contractor bailed ash on the pond floor diagonally to the face of the excavation.
10:30 - The John Deere 380G excavator began to have mechanical issues. A John Deere mechanic arrived onsite to start repairs.
11:00 - The contractor used the long-reach excavator to remove the access point over the south contact water trench. The excavated material was placed in the south trench on both sides of the previous access point. A dozer spread out the material in the trench.
11:30 - The long-reach excavator began excavating additional dry material from the mound on the west side of the closure area and placing it above the southwest corner of the contact water collection system. The material was spread out along the south trench.
11:40 - SCS staff discussed with the contractor keeping perimeter roads cleaned up and keeping ash material, particularly the containment pits on the east side, inside the pond footprint.
12:00 - The contractor rolled the south trench with the compactor. The contractor then performed a proof roll over the south trench with a loaded dump truck. The south trench area passed the proof roll. A soft spot just north of the southwest corner of the contact water collection system was identified. Several more lifts of dry ash material were placed, compacted and proof rolled in the south trench. All additional proof rolls passed.
12:15 - Crew began disking the drying area on the east side of the existing ash pond. The disk went back and forth between the west side of the closure area and the east side of the pond for a majority of the remaining part of the day.
1:00 - SCS staff inspected a section of the pond floor to be cleared as clean. Some additional cleaning was required through a low valley in the existing clay liner. The contractor used a compact excavator to clean this area. The section of floor was cleared as clean.
1:30 - An approximately 6.5' section of hdpe pipe was found imbedded in the existing clay liner. Through discussion with the City it was decided to leave the pipe in place and fill on top of it. SCS surveyed the section of pipe for record.
3:00 - SCS staff surveyed the section of the pond floor that was cleared as clean.
4:00 - Crew continued moving material around in the east containment pit with the long-reach excavator.
5:15 - The contractor continued bailing ash on the south side of the pond floor.
6:00 - The contractor used an excavator to continue removing the existing concrete pad. Concrete was stockpiled east of the pad are for now.
6:30 - A tractor with a pull-behind sheepsfoot compactor was mobilized to the site. The compactor had approximately 7" pad length.
6:40 - Excavation and disking continued until stop of work.

Material(s) Delivered to Site

NA

Construction Observer

Chris Calhoun, Brandon Suchomel

SCS ENGINEERS

DAILY FIELD ACTIVITIES REPORT

Client Name:	Ames Municipal Electric System	**Date:**	July 16, 2024
SCS Engineers Project Name:	Ames Ash Pond Closure	**Start Time:**	7:00 AM
SCS Engineers Project No:	27219356.02	**Stop Time:**	7:00 PM
Project Location:	Ames Municipal Electric System Ash Ponds Ames, Iowa		

Task: *Ash Placement, Ash Excavation, Clay Import, NDG Calibration*

Weather Information

80°, Cloudy, Winds from N at 10 mph

Contractors, Personnel, and Equipment On Site

Contractors: JB Holland Personnel: 6
Equipment: 1-John Deere 380G LC Excavator, 1-CAT D6N LGP Dozer, 1-MTS 3630T Construction Tractor, John Deere 624K Loader, Bobcat T770 Compact Track Loader, 2-CAT Dump Trucks, 1-Case IH 9280 Tractor, 1-ROME TAW-20S Wheel Offset Disc Harrow, 1-Bobcat E50 R2 Compact Excavator, 1-Fuel Truck, 1-CAT D6T LGP Dozer, 1-Water Truck, 1-CAT CP56B Compactor, 1-SANY SY265C LC Long-Reach Excavator, 1-Hurricane HD3700 Drop Hammer

Work Areas/Boundaries

Existing Ash Pond

Testing Equipment Used/Observed and Calibration/Re-Calibration Documentation

Nuclear Density Gauge - Standard Calibration

Tests Completed/Observed

NA

Work Comments/Observations and Test Results

7:00 - The contractor began filling in a low area north of the contact water storage area. The ash material used to fill this area was from the mound located in the central part of the closure area.
8:15 - SCS staff finished surveying the north sidelope for the section of excavation that was cleared as clean. SCS surveyed field identified locations where the seperation berm clay liner will tie-in to the encountered north sideslope.
9:00 - Weekly project update meeting with SCS, City of Ames, and contractor.
9:30 - The contractor began bailing ash from the southeast corner of the existing ash pond with the long-reach excavator.
9:45 - Clay fill started being delivered to the site. The fill was dumped at the top of the north sideslope that had been cleared as clean the day prior. The contractor began pushing the clay down the slope with a skidloader.
11:30 - SCS staff performed the standard calibration for the nuclear density gauge that will be used for clay compaction testing. The calibration was performed on the asphalt laydown area on the southwest side of the property.
12:00 - The contractor began pushing clay onto the excavation floor with a dozer. Clay fill material being delivered had high moisture content.
12:30 - The contractor used a dozer to work the ash in the closure area.
4:00 - SCS staff set some stakes to use as a visual guide for clay compaction testing and pond excavation surveying.
5:30 - The contractor worked to dewater a low area on the eastern side of the excavation floor. Clay fill continued to be imported and stockpiled on the north sideslope area.
6:30 - Long reach excavator worked material in the east containment pits pulling off the top crust layer and making additional room for future ash placement in the containment pit.

Material(s) Delivered to Site

Clay Fill

Construction Observer

Chris Calhoun, Brandon Suchomel

SCS ENGINEERS

DAILY FIELD ACTIVITIES REPORT

Client Name:	Ames Municipal Electric System	**Date:**	July 15, 2024
SCS Engineers Project Name:	Ames Ash Pond Closure	**Start Time:**	8:00 AM
SCS Engineers Project No:	27219356.02	**Stop Time:**	5:00 PM
Project Location:	Ames Municipal Electric System Ash Ponds Ames, Iowa		

Task: *Cleaned Excavation Clearing, Ash Conditioning, Proof Roll*

Weather Information

92°, Sunny in the morning with storms moving in at the end of the day, Winds from S at 6 mph

Contractors, Personnel, and Equipment On Site

Contractors: JB Holland Personnel: 6
Equipment: 1-John Deere 380G LC Excavator, 1-CAT D6N LGP Dozer, 1-MTS 3630T Construction Tractor, John Deere 624K Loader, Bobcat T770 Compact Track Loader, 2-CAT Dump Trucks, 1-Case IH 9280 Tractor, 1-ROME TAW-20S Wheel Offset Disc Harrow, 1-Bobcat E50 R2 Compact Excavator, 1-Fuel Truck, 1-CAT D6T LGP Dozer, 1-Water Truck, 1-CAT CP56B Compactor, 1-SANY SY265C LC Long-Reach Excavator, 1-Hurricane HD3700 Drop Hammer

Work Areas/Boundaries

Existing Ash Pond

Testing Equipment Used/Observed and Calibration/Re-Calibration Documentation

NA

Tests Completed/Observed

NA

Work Comments/Observations and Test Results

8:30 - The contractor disked the ash in the drying area on the east side of the existing ash pond.
8:30 - Crew used the dozer to clean the floor of the separation berm excavation. After cleaning the floor, the dozer operator began cleaning the north sideslope.
8:45 - The contractor turned on the pump to dewater the bottom of the separation berm excavation.
9:00 - SCS inspected the pad lengths on the CAT-CP56B compactor on site; the pad lengths were ~5" in length. Discussion with contractor on clay lift thickness and pad length per project specifications was had.
10:00 - SCS walked a section of the excavation floor with the contractor to evaluate whether it could be determined as clean. A section was cleared as clean.
10:30 - The contractor excavated test holes in the north sideslope to see how much depth remained to reach 'clean' material.
10:45 - Crew rolled the compactor in the west side of the closure area.
11:15 - The contractor performed a proof roll with a loaded dump truck in the closure area. The upper level of the closure area passed the proof roll. Several areas on the lowest level, primarily the west 15'-20' of this area, failed the proof roll with ruts exceeding 6" in depth.
12:30 - The contractor encountered sand while cleaning the north sideslope, appeared to have excavated through the existing clay liner in this location. Discussion with contractor about excavating to clean not necessarily design excavation was had.
12:45 - SCS staff surveyed the bottom of excavation elevations for the cleared section.
1:00 - The contractor began placing a lift of wet ash material on the upper level of the closure area that passed the proof roll.
1:45 - SCS staff identified the location of the design western toe of the proposed separation berm.
3:15 - Crew used a skidloader to clear off the perimeter access roads.
3:30 - The dozer operator leveled out the low area on the west side of the closure area that was proof rolled earlier in the day.
4:45 - Heavy rain and wind moved into the area and the contractor began to end work for the day.

Material(s) Delivered to Site

NA

Construction Observer

Chris Calhoun, Brandon Suchomel

SCS ENGINEERS

DAILY FIELD ACTIVITIES REPORT

Client Name:	Ames Municipal Electric System	**Date:**	July 12, 2024
SCS Engineers Project Name:	Ames Ash Pond Closure	**Start Time:**	8:00 AM
SCS Engineers Project No:	27219356.02	**Stop Time:**	11:30 PM
Project Location:	Ames Municipal Electric System Ash Ponds Ames, Iowa		

Task: *Separation Berm Excavation, Concrete Pad Removal*

Weather Information

85°, Sunny, Winds from SE at 15 mph

Contractors, Personnel, and Equipment On Site

Contractors: JB Holland Personnel: 6
Equipment: 2-John Deere 380G LC Excavators, 1-CAT D6N LGP Dozer, 1-MTS 3630T Construction Tractor, John Deere 624K Loader, Bobcat T770 Compact Track Loader, 2-CAT Dump Trucks, 1-Case IH 9280 Tractor, 1-ROME TAW-20S Wheel Offset Disc Harrow, 1-Bobcat E50 R2 Compact Excavator, 1-Fuel Truck, 1-CAT D6T LGP Dozer, 1-4,000 Gal. Water Truck, 1-CAT CP56B Compactor, 1-SANY SY265C LC Long-Reach Excavator, 1-Hurricane HD3700 Drop Hammer

Work Areas/Boundaries

Existing Ash Pond

Testing Equipment Used/Observed and Calibration/Re-Calibration Documentation

NA

Tests Completed/Observed

NA

Work Comments/Observations and Test Results

8:00 - Crew continued cleaning the excavation adjacent to the east contact water trench with shovels.
8:30 - The contractor used a dozer to clean the bottom of the separation berm excavation.
8:30 - The contractor utilized a dozer to turn over the ash in the closure area.
8:45 - The contractor used a skidloader equipped with a drop hammer to start breaking up the concrete pad north of the east clearwater pond .
10:45 - The contractor used an excavator to remove a portion of the concrete pad.
11:15 - The contractor turned on the pump to dewater from the bottom of the separation berm excavation.

Material(s) Delivered to Site

NA

Construction Observer

Chris Calhoun

SCS ENGINEERS

DAILY FIELD ACTIVITIES REPORT

Client Name:	Ames Municipal Electric System	**Date:**	July 11, 2024
SCS Engineers Project Name:	Ames Ash Pond Closure	**Start Time:**	8:00 AM
SCS Engineers Project No:	27219356.02	**Stop Time:**	6:00 PM
Project Location:	Ames Municipal Electric System Ash Ponds Ames, Iowa		

Task: *Contact Water Storage Area, Separation Berm Excavation, Ash Placement*

Weather Information

83°, Sunny, Winds from E at 8 mph

Contractors, Personnel, and Equipment On Site

Contractors: JB Holland Personnel: 6
Equipment: 2-John Deere 380G LC Excavators, 1-CAT D6N LGP Dozer, 1-MTS 3630T Construction Tractor, John Deere 624K Loader, Bobcat T770 Compact Track Loader, 2-CAT Dump Trucks, 1-Case IH 9280 Tractor, 1-ROME TAW-20S Wheel Offset Disc Harrow, 1-Bobcat E50 R2 Compact Excavator, 1-Fuel Truck, 1-CAT D6T LGP Dozer, 1-4,000 Gal. Water Truck, 1-CAT CP56B Compactor, 1-SANY SY265C LC Long-Reach Excavator

Work Areas/Boundaries

Existing Ash Pond

Testing Equipment Used/Observed and Calibration/Re-Calibration Documentation

NA

Tests Completed/Observed

NA

Work Comments/Observations and Test Results

8:00 - The contractor continued excavation for the separation berm. A portion of the dryer excavated material was hauled to the closure area to be spread out with a dozer. The remainder of the excavated material was dumped in the "bowl" on the far east side of the existing ash pond.
11:00 - Crew began backfilling the contact water storage area with dry ash material so that equipment could access the eastern edge of the area. The dry ash material was taken from the ash mound in the central portion of the closure area.
11:30 - The contractor used an excavator to remove the ash that abutted the eastern edge of the contact water storage area.
12:30 - Crew used a skidloader to clear off the concrete pad north of the east clearwater pond.
1:00 - The contractor began removing drainage aggregate from the portion of the contact water storage area that was in conflict with the western edge of the separation berm footprint. Some of the excavated rock was placed around the cleanout stubs. The remainder was placed over the geotextile fabric covering the storage area.
2:30 - The contractor used a dozer to turn over the ash in the closure area.
3:30 - The contractor began excavating ash along the eastern edge of the east contact water collection trench until the geotextile fabric was exposed. The excavation was performed primarily with a John Deere 380G Excavator and then fine-tuned with shovels.

Material(s) Delivered to Site

NA

Construction Observer

Chris Calhoun

SCS ENGINEERS

DAILY FIELD ACTIVITIES REPORT

Client Name:	Ames Municipal Electric System	**Date:**	July 10, 2024
SCS Engineers Project Name:	Ames Ash Pond Closure	**Start Time:**	8:00 AM
SCS Engineers Project No:	27219356.02	**Stop Time:**	6:00 PM
Project Location:	Ames Municipal Electric System Ash Ponds Ames, Iowa		

Task: *Separation Berm Excavation, Ash Placement*

Weather Information

80°, Cloudy with some light rain in the morning, Winds from N at 10 mph

Contractors, Personnel, and Equipment On Site

Contractors: JB Holland Personnel: 6
Equipment: 2-John Deere 380G LC Excavators, 1-CAT D6N LGP Dozer, 1-MTS 3630T Construction Tractor, John Deere 624K Loader, Bobcat T770 Compact Track Loader, 2-CAT Dump Trucks, 1-Case IH 9280 Tractor, 1-ROME TAW-20S Wheel Offset Disc Harrow, 1-Bobcat E50 R2 Compact Excavator, 1-Fuel Truck, 1-CAT D6T LGP Dozer, 1-4,000 Gal. Water Truck, 1-CAT CP56B Compactor, 1-SANY SY265C LC Long-Reach Excavator

Work Areas/Boundaries

Existing Ash Pond

Testing Equipment Used/Observed and Calibration/Re-Calibration Documentation

NA

Tests Completed/Observed

NA

Work Comments/Observations and Test Results

8:00 - The contractor used an excavator to pile dry ash material in the low area on the west side of the closure area. This material was excavated from the ash mound in the central portion of the closure area.
8:00 - The contractor continued excavation for the separation berm. The dryer excavated material was hauled to the far east side of the existing ash pond to form the perimeter berm for another "bowl".
8:45 - Crew used a dozer to spread out the dry ash material in the western portion of the closure area.
10:30 - The contractor used an excavator to place dry ash material in the low area above the north contact water collection pipe trench. The ash was spread out with a dozer.
11:30 - The contractor began dumping excavated ash material in the newly created "bowl" on the east side of the existing ash pond.
12:00 - The contractor rolled the compactor over the dry ash in the west and north portions of the closure area.
2:30 - The contractor used a dozer to turn over the ash in the closure area.
4:30 - The contractor began placing another lift of excavated ash on the west and north sides of the closure area.

Material(s) Delivered to Site

NA

Construction Observer

Chris Calhoun

SCS ENGINEERS

DAILY FIELD ACTIVITIES REPORT

Client Name:	Ames Municipal Electric System	**Date:**	July 9, 2024
SCS Engineers Project Name:	Ames Ash Pond Closure	**Start Time:**	8:00 AM
SCS Engineers Project No:	27219356.02	**Stop Time:**	6:00 PM
Project Location:	Ames Municipal Electric System Ash Ponds Ames, Iowa		

Task: *Separation Berm Excavation, Ash Placement*

Weather Information

84°, Partly Cloudy, Winds from N at 8 mph

Contractors, Personnel, and Equipment On Site

Contractors: JB Holland Personnel: 6
Equipment: 2-John Deere 380G LC Excavators, 1-CAT D6N LGP Dozer, 1-MTS 3630T Construction Tractor, John Deere 624K Loader, Bobcat T770 Compact Track Loader, 2-CAT Dump Trucks, 1-Case IH 9280 Tractor, 1-ROME TAW-20S Wheel Offset Disc Harrow, 1-Bobcat E50 R2 Compact Excavator, 1-Fuel Truck, 1-CAT D6T LGP Dozer, 1-4,000 Gal. Water Truck, 1-CAT CP56B Compactor, 1-SANY SY265C LC Long-Reach Excavator

Work Areas/Boundaries

Existing Ash Pond

Testing Equipment Used/Observed and Calibration/Re-Calibration Documentation

NA

Tests Completed/Observed

NA

Work Comments/Observations and Test Results

8:00 - The contractor continued excavation for the separation berm. Dryer excavated material from approximately the upper 4' was hauled to the closure area to be spread out with a dozer.
9:45 - SCS staff (Calhoun, Suchomel, and Kuhlenengel) worked to identify the existing clay liner on the south sideslope of the separation berm excavation.
10:45 - Crew used a dozer to work the ash above the west portion of the contact water collection system.
11:00 - The contractor worked on creating another "bowl" for piling wet ash material in the northeast corner of the existing ash pond. Crew created a berm with dryer ash material to form the perimeter of the "bowl". Once the perimeter was created, wet ash started being placed within the "bowl".
11:30 - The contractor disked ash in the drying area on the east side of the existing ash pond.
12:30 - The contractor placed a lift of wet ash in the drying area on the east side of the existing ash pond.
1:30 - The contractor used a dozer to bail wet ash from the bottom of the separation berm excavation.
1:45 - The contractor rolled the compactor over the ash above the south contact water collection trench.
2:00 - Excavation for the separation berm continued.

Material(s) Delivered to Site

NA

Construction Observer

Chris Calhoun

SCS ENGINEERS

DAILY FIELD ACTIVITIES REPORT

Client Name:	Ames Municipal Electric System	**Date:**	July 8, 2024
SCS Engineers Project Name:	Ames Ash Pond Closure	**Start Time:**	8:00 AM
SCS Engineers Project No:	27219356.02	**Stop Time:**	6:00 PM
Project Location:	Ames Municipal Electric System Ash Ponds Ames, Iowa		

Task: *Separation Berm Excavation, Ash Placement, Dewatering*

Weather Information

83°, Sunny, Winds from W at 6 mph

Contractors, Personnel, and Equipment On Site

Contractors: JB Holland Personnel: 4
Equipment: 2-John Deere 380G LC Excavators, 1-CAT D6N LGP Dozer, 1-MTS 3630T Construction Tractor, John Deere 624K Loader, Bobcat T770 Compact Track Loader, 2-CAT Dump Trucks, 1-Case IH 9280 Tractor, 1-ROME TAW-20S Wheel Offset Disc Harrow, 1-Bobcat E50 R2 Compact Excavator, 1-Fuel Truck, 1-CAT D6T LGP Dozer, 1-4,000 Gal. Water Truck, 1-CAT CP56B Compactor, 1-SANY SY265C LC Long-Reach Excavator

Work Areas/Boundaries

Existing Ash Pond

Testing Equipment Used/Observed and Calibration/Re-Calibration Documentation

NA

Tests Completed/Observed

NA

Work Comments/Observations and Test Results

8:00 - The contractor turned on the pumps to dewater the southeast corner of the existing ash pond and the bottom of the separation berm excavation.
8:15 - The contractor continued excavation for the separation berm. The dryer excavated material from approximately the top 4' was hauled to the northeast corner of the closure area and spread out with a dozer. The wetter material from the lower elevations of the excavation was hauled directly to the east and placed in the "bowl" on the west side of the main drying area.
12:00 - Excavators were used to distribute the wet ash material in the "bowl".
1:15 - Crew used a dozer to work the upper lift of ash above the west portion of the contact water collection system.
4:30 - The contractor used a dozer to bail wet ash from the bottom of the separation berm excavation.

Material(s) Delivered to Site

NA

Construction Observer

Chris Calhoun

SCS ENGINEERS

DAILY FIELD ACTIVITIES REPORT

Client Name:	Ames Municipal Electric System	**Date:**	July 1, 2024
SCS Engineers Project Name:	Ames Ash Pond Closure	**Start Time:**	7:30 AM
SCS Engineers Project No:	27219356.02	**Stop Time:**	7:00 PM
Project Location:	Ames Municipal Electric System Ash Ponds Ames, Iowa		

Task: *Separation Berm Excavation, Dewatering*

Weather Information

66°, Cloudy, Winds from SE at 13 mph

Contractors, Personnel, and Equipment On Site

Contractors: JB Holland Personnel: 5
Equipment: 2-John Deere 380G LC Excavators, 1-CAT D6N LGP Dozer, 1-MTS 3630T Construction Tractor, John Deere 624K Loader, Bobcat T770 Compact Track Loader, 2-CAT Dump Trucks, 1-Case IH 9280 Tractor, 1-ROME TAW-20S Wheel Offset Disc Harrow, 1-Bobcat E50 R2 Compact Excavator, 1-Fuel Truck, 1-CAT D6T LGP Dozer, 1-4,000 Gal. Water Truck, 1-CAT CP56B Compactor, 1-SANY SY265C LC Long-Reach Excavator

Work Areas/Boundaries

Existing Ash Pond, Borrow Source

Testing Equipment Used/Observed and Calibration/Re-Calibration Documentation

NA

Tests Completed/Observed

NA

Work Comments/Observations and Test Results

7:30 - The contractor started to dewater the southeast corner of the existing ash pond.
8:30 - The contractor continued excavation for the separation berm. Excavated material was placed in the drying area to the east.
8:30 - Crew used a dozer to smooth out the drying areas on the east and west sides of the site.
12:00 - The contractor worked to create a sump to pump water from in the bottom of the separation berm excavation.
1:45 - The contractor and SCS met a representative from Team Services at the clay borrow source to collect soil samples for testing.
2:45 - Excavation and spreading ash around the site for drying continued.

Material(s) Delivered to Site

NA

Construction Observer

Chris Calhoun

SCS ENGINEERS

DAILY FIELD ACTIVITIES REPORT

Client Name:	Ames Municipal Electric System	**Date:**	June 27, 2024
SCS Engineers Project Name:	Ames Ash Pond Closure	**Start Time:**	7:00 AM
SCS Engineers Project No:	27219356.02	**Stop Time:**	7:00 PM
Project Location:	Ames Municipal Electric System Ash Ponds Ames, Iowa		

Task: *Separation Berm Excavation, General Ash Excavation*

Weather Information

79°, Partly Cloudy, Winds from S at 10 mph

Contractors, Personnel, and Equipment On Site

Contractors: JB Holland Personnel: 7
Equipment: 2-John Deere 380G LC Excavators, 1-CAT D6N LGP Dozer, 1-MTS 3630T Construction Tractor, John Deere 624K Loader, Bobcat T770 Compact Track Loader, 2-CAT Dump Trucks, 1-Case IH 9280 Tractor, 1-ROME TAW-20S Wheel Offset Disc Harrow, 1-Bobcat E50 R2 Compact Excavator, 1-Fuel Truck, 1-CAT D6T LGP Dozer, 1-4,000 Gal. Water Truck, 1-CAT CP56B Compactor, 1-SANY SY265C LC Long-Reach Excavator

Work Areas/Boundaries

Existing Ash Pond

Testing Equipment Used/Observed and Calibration/Re-Calibration Documentation

NA

Tests Completed/Observed

NA

Work Comments/Observations and Test Results

7:00 - The contractor continued excavation for the separation berm. Excavated material was placed in the drying area to the east.
8:15 - Crew finished placing geotextile fabric in the contact water storage area.
10:00 - Crew graded the existing ash mound in the central part of the closure area.
10:45 - The contractor used a long-reach excavator to excavate ash material from the southeast corner of the existing ash pond.
2:30 - The contractor began constructing a berm, consisting of dry ash, along the perimeter of the wet ash material excavated from the separation berm area. They have dubbed this containment area, "the toilet bowl".

Material(s) Delivered to Site

NA

Construction Observer

Chris Calhoun

SCS ENGINEERS

DAILY FIELD ACTIVITIES REPORT

Client Name:	Ames Municipal Electric System	**Date:**	June 26, 2024
SCS Engineers Project Name:	Ames Ash Pond Closure	**Start Time:**	7:00 AM
SCS Engineers Project No:	27219356.02	**Stop Time:**	7:00 PM
Project Location:	Ames Municipal Electric System Ash Ponds Ames, Iowa		

Task: *Separation Berm Excavation, Ash Placement, Contact Water Storage Area*

Weather Information

86°, Sunny, Winds from N at 15 mph

Contractors, Personnel, and Equipment On Site

Contractors: JB Holland Personnel: 7
Equipment: 2-John Deere 380G LC Excavators, 1-CAT D6N LGP Dozer, 1-MTS 3630T Construction Tractor, John Deere 624K Loader, Bobcat T770 Compact Track Loader, 2-CAT Dump Trucks, 1-Case IH 9280 Tractor, 1-ROME TAW-20S Wheel Offset Disc Harrow, 1-Bobcat E50 R2 Compact Excavator, 1-Fuel Truck, 1-CAT D6T LGP Dozer, 1-4,000 Gal. Water Truck, 1-CAT CP56B Compactor, 1-SANY SY265C LC Long-Reach Excavator

Work Areas/Boundaries

Existing Ash Pond

Testing Equipment Used/Observed and Calibration/Re-Calibration Documentation

NA

Tests Completed/Observed

NA

Work Comments/Observations and Test Results

7:00 - The contractor continued placing drainage aggregate in the contact water storage area.
7:30 - The contractor began excavating material from the proposed location of the separation berm. Excavated material was placed in the far northeast corner of the existing ash pond.
10:00 - The contractor continued placing a lift of dry ash material over the wetsern portion of the contact water collection system.
12:00 - The contractor began placing the bridge lift of ash over the north contact water collection trench.
12:30 - Water was applied to the roadways for dust control. This occured several more times throughout the day.
12:30 - Crew used a skidloader to spread drainage aggregate in the contact water storage area.
3:00 - The contractor continued excavation for the separation berm.
3:30 - The contractor began placing a lift of wet ash over the west and north lifts of dry ash placed earlier in the day.
5:30 - Crew began placing geotextile fabric over the drainage aggregate in the contact water storage area.

Material(s) Delivered to Site

Drainage Aggregate

Construction Observer

Chris Calhoun

SCS ENGINEERS

DAILY FIELD ACTIVITIES REPORT

Client Name:	Ames Municipal Electric System	**Date:**	June 25, 2024
SCS Engineers Project Name:	Ames Ash Pond Closure	**Start Time:**	7:00 AM
SCS Engineers Project No:	27219356.02	**Stop Time:**	7:00 PM
Project Location:	Ames Municipal Electric System Ash Ponds Ames, Iowa		

Task: *Contact Water Collection System, Ash Placement, Ash Excavation*

Weather Information

91°, Sunny, Winds from NE at 11 mph

Contractors, Personnel, and Equipment On Site

Contractors: JB Holland Personnel: 6
Equipment: 1-John Deere 380G LC Excavator, 1-John Deere 200D LC Excavator, 1-CAT D6N LGP Dozer, 1-MTS 3630T Construction Tractor, John Deere 624K Loader, Bobcat T770 Compact Track Loader, 2-CAT Dump Trucks, 1-Case IH 9280 Tractor, 1-ROME TAW-20S Wheel Offset Disc Harrow, 1-Bobcat E50 R2 Compact Excavator, 1-John Deere 135G Excavator, 1-Fuel Truck, 1-CAT D6T LGP Dozer, 1-4,000 Gal. Water Truck, 1-CAT CP56B Compactor, 1-SANY SY265C LC Long-Reach Excavator, 1-McElroy TracStar 618 Series 2 Fusion Machine

Work Areas/Boundaries

Existing Ash Pond

Testing Equipment Used/Observed and Calibration/Re-Calibration Documentation

NA

Tests Completed/Observed

NA

Work Comments/Observations and Test Results

7:00 - The contractor began backfilling with drainage aggregate over the contact water collection pipe that was installed the day prior. The geotextile fabric was then closed and covered with sand.
8:00 - Crew welded cleanout stubs to the installed contact water collection pipe in the northeast and southeast corners of the collection system.
10:45 - The contractor began excavating to prepare for installation of the 18" sideslope riser pipe. Crew placed approximately 6" of sand in the bottom of the trench.
10:45 - Crew began hauling previously excavated material from the construction of the contact water storage area to the northeast drying area. The ash was then spread out with a dozer.
12:45 - The contractor placed the welded 18" sump/riser pipe into the contact water storage area. SCS surveyed the top of pipe.
2:15 - Crew excavated ash from the southeast corner of the existing ash pond.
3:30 - The contractor began placing an additional lift of dry ash material over the bridge lift above the western portion of the contact water collection system.
4:15 - Crew began covering the 18" sump pipe with drainage aggregate.
4:30 - The contractor hauled the remaining stockpiled ash, located near the existing concrete pad, to the far northeast corner of the existing ash pond.
6:15 - Crew continued placing drainage aggregate in the contact water storage area.

Material(s) Delivered to Site

NA

Construction Observer

Chris Calhoun

SCS ENGINEERS

DAILY FIELD ACTIVITIES REPORT

Client Name:	Ames Municipal Electric System	**Date:**	June 24, 2024
SCS Engineers Project Name:	Ames Ash Pond Closure	**Start Time:**	8:00 AM
SCS Engineers Project No:	27219356.02	**Stop Time:**	7:00 PM
Project Location:	Ames Municipal Electric System Ash Ponds Ames, Iowa		

Task: *Contact Water Collection Pipe*

Weather Information

94°, Sunny, Winds from S at 17 mph

Contractors, Personnel, and Equipment On Site

Contractors: JB Holland Personnel: 7
Equipment: 1-John Deere 380G LC Excavator, 1-John Deere 200D LC Excavator, 1-CAT D6N LGP Dozer, 1-MTS 3630T Construction Tractor, John Deere 624K Loader, Bobcat T770 Compact Track Loader, 2-CAT Dump Trucks, 1-Case IH 9280 Tractor, 1-ROME TAW-20S Wheel Offset Disc Harrow, 1-Bobcat E50 R2 Compact Excavator, 1-John Deere 135G Excavator, 1-Fuel Truck, 1-CAT D6T LGP Dozer, 1-4,000 Gal. Water Truck, 1-CAT CP56B Compactor, 1-SANY SY265C LC Long-Reach Excavator, 1-McElroy TracStar 618 Series 2 Fusion Machine

Work Areas/Boundaries

Existing Ash Pond

Testing Equipment Used/Observed and Calibration/Re-Calibration Documentation

NA

Tests Completed/Observed

NA

Work Comments/Observations and Test Results

8:00 - The contractor pumped water from the contact water storage area.
9:00 - Crew used a dozer to smooth the drying areas in the east and north portions of the site.
9:30 - The contractor continued trench excavation for the east run of contact water collection pipe. Geotextile fabric and drainage aggregate were placed in the bottom of the trench.
10:30 - Crew began cutting down the portion of the internal access road that was located above the proposed north run of contact water collection pipe. Excavated material was hauled to the south and used to construct a new access point over the installed south contact water collection pipe.
12:15 - The contractor began trench excavation for the north run of contact water collection pipe. Geotextile fabric and drainage aggregate were placed in the bottom of the trench.
2:30 - While trenching for the north run of contact water collection pipe, the contractor encountered clay material at an elevation higher than anticipated. SCS verified that it was clay. The contractor transitioned the bottom of the trench upward to match the top of the clay.
4:30: Crew finished excavation of the trench in the northeast corner of the contact water collection system.
4:45 - The contractor began placing pipe into the north contact water collection trench. Crew welded the pipe to the previously installed stub in the northwest corner of the contact water collection system. Once placed, SCS surveyed the top of pipe.
6:00 - Crew welded the tee section in the northeast corner of the contact water collection system. Crew began placing pipe to connect to the previously installed portion of east contact water collection pipe.
6:45 - Crew welded the pipe to the previously installed portion of east contact water collection pipe. SCS then surveyed the top of the pipe.

Material(s) Delivered to Site

Sand, Drainage Aggregate

Construction Observer

Chris Calhoun

SCS ENGINEERS

DAILY FIELD ACTIVITIES REPORT

Client Name:	Ames Municipal Electric System	**Date:**	June 21, 2024
SCS Engineers Project Name:	Ames Ash Pond Closure	**Start Time:**	7:00 AM
SCS Engineers Project No:	27219356.02	**Stop Time:**	5:30 PM
Project Location:	Ames Municipal Electric System Ash Ponds Ames, Iowa		

Task: *Contact Water Collection Pipe, Ash Placement*

Weather Information

88°, Partly Cloudy, Winds from S at 13 mph

Contractors, Personnel, and Equipment On Site

Contractors: JB Holland Personnel: 7
Equipment: 1-John Deere 380G LC Excavator, 1-John Deere 200D LC Excavator, 1-CAT D6N LGP Dozer, 1-MTS 3630T Construction Tractor, John Deere 624K Loader, Bobcat T770 Compact Track Loader, 2-CAT Dump Trucks, 1-Case IH 9280 Tractor, 1-ROME TAW-20S Wheel Offset Disc Harrow, 1-Bobcat E50 R2 Compact Excavator, 1-John Deere 135G Excavator, 1-Fuel Truck, 1-CAT D6T LGP Dozer, 1-4,000 Gal. Water Truck, 1-CAT CP56B Compactor, 1-SANY SY265C LC Long-Reach Excavator, 1-McElroy TracStar 618 Series 2 Fusion Machine

Work Areas/Boundaries

Existing Ash Pond

Testing Equipment Used/Observed and Calibration/Re-Calibration Documentation

NA

Tests Completed/Observed

NA

Work Comments/Observations and Test Results

7:00 - The contractor pumped water from the contact water storage area.
8:00 - Crew began fusion welding the 18" contact water sump and inclined riser pipes.
8:00 - Crew placed the remainder of the south run of contact water collection pipe that extends into the contact water storage area. The pipe was covered with drainage aggregate.
10:00 - The contractor began backfilling the southwest corner of the contact water collection system with drainage aggregate. The geotextile fabric was then closed and covered with sand.
10:30 - Crew continued north with trenching for the east run of contact water collection pipe. Geotextile fabric and drainage aggregate were placed in the bottom of the trench as it progressed.
11:00 - Crew backfilled the installed portion of south contact water collection pipe with drainage aggregate. The geotextile fabric was then closed and covered with sand.
11:30 - The contractor covered the southwest corner of the contact water collection system and the remainder of the south contact water collection pipe trench with a bridge lift of ash.
12:00 - The crew began working the ash on the top of the mound in the central portion of the closure area. Crew began pushing ash down the eastern sideslope of the mound towards the east contact water collection trench.
12:30 - The contractor used a dozer to spread out and smooth the ash surface in the northeast corner of the existing ash pond.
3:15 - Crew compacted the lift of ash over the the southern side of the contact water collection system.
3:45 - Crew began placing pipe into the east contact water collection trench. Once installed, SCS surveyed the top of pipe.
4:30 - The contractor began backfilling over the pipe with drainage aggregate and started closed the geotextile fabric.
5:00 - The contractor began covering the east contact water collection trench with sand.

Material(s) Delivered to Site

NA

Construction Observer

Chris Calhoun

SCS ENGINEERS

DAILY FIELD ACTIVITIES REPORT

Client Name:	Ames Municipal Electric System	**Date:**	June 20, 2024
SCS Engineers Project Name:	Ames Ash Pond Closure	**Start Time:**	7:00 AM
SCS Engineers Project No:	27219356.02	**Stop Time:**	7:00 PM
Project Location:	Ames Municipal Electric System Ash Ponds Ames, Iowa		

Task: *Existing Liner Repair, Contact Water Collection Storage Area*

Weather Information

80°, Partly Cloudy, Winds from SE at 5 mph

Contractors, Personnel, and Equipment On Site

Contractors: JB Holland Personnel: 7
Equipment: 1-John Deere 380G LC Excavator, 1-John Deere 200D LC Excavator, 1-CAT D6N LGP Dozer, 1-MTS 3630T Construction Tractor, John Deere 624K Loader, Bobcat T770 Compact Track Loader, 2-CAT Dump Trucks, 1-Case IH 9280 Tractor, 1-ROME TAW-20S Wheel Offset Disc Harrow, 1-Bobcat E50 R2 Compact Excavator, 1-John Deere 135G Excavator, 1-Fuel Truck, 1-CAT D6T LGP Dozer, 1-4,000 Gal. Water Truck, 1-CAT CP56B Compactor, 1-SANY SY265C LC Long-Reach Excavator, 1-McElroy TracStar 618 Series 2 Fusion Machine

Work Areas/Boundaries

Existing Ash Pond

Testing Equipment Used/Observed and Calibration/Re-Calibration Documentation

NA

Tests Completed/Observed

NA

Work Comments/Observations and Test Results

7:00 - The contractor began placing drainage aggregate in the bottom of the contact water storage area with a long reach excavator.
7:30 - The contractor continued cleaning out the sump hole near the northwest corner of the contact water collection system where the clay liner had been disturbed. Crew pumped out the remaining free water in the sump and started to fill the hole with bentonite. Once placed, SCS surveyed the top of the bentonite to verify the elevation matched the previous top of existing clay liner elevation (883.0'+). Crew then backfilled the hole with dry ash material.
9:00 - The contractor continued excavating the contact water collection storage area.
10:00 - The contractor began dewatering in the eastern area of the existing ash pond.
10:30 - Crew used a dozer to spread the wet ash in the far eastern drying area of the existing ash pond.
11:15 - The contractor began dewatering in an area along the northern perimeter of the existing ash pond.
1:45 - Crew began welding pipe for the east run of contact water collection pipe.
3:00 - The contractor continued placing drainage aggregate in the bottom of the contact water storage area with a long reach excavator.
4:00 - The contractor began placing the portion of the eastern contact water collection pipe that extends into the contact water storage area. Crew began welding the pipe to the previously installed portion of east contact water collection pipe.
4:45 - The contractor began excavating wet sand out of the east contact water collection pipe trench and backfilled with dry sand.
5:15 - Crew continued north with trenching for the east contact water collection pipe. Geotextile fabric and drainage aggregate were placed in the bottom of the trench. Dewatering of the trench was performed as needed.
6:15 - Crew used a dozer to grade the far eastern side slope of the existing ash pond.

Material(s) Delivered to Site

Drainage Aggregate

Construction Observer

Chris Calhoun

SCS ENGINEERS

DAILY FIELD ACTIVITIES REPORT

Client Name:	Ames Municipal Electric System	**Date:**	June 19, 2024
SCS Engineers Project Name:	Ames Ash Pond Closure	**Start Time:**	10:30 AM
SCS Engineers Project No:	27219356.02	**Stop Time:**	6:45 PM
Project Location:	Ames Municipal Electric System Ash Ponds Ames, Iowa		

Task: *Contact Water Collection Storage Area, Contact Water Collection Pipe*

Weather Information

70°, Cloudy, Some light rain throughout the day, Winds from N at 10 mph

Contractors, Personnel, and Equipment On Site

Contractors: JB Holland
Personnel: 7
Equipment: 1-John Deere 380G LC Excavator, 1-John Deere 200D LC Excavator, 1-CAT D6N LGP Dozer, 1-MTS 3630T Construction Tractor, John Deere 624K Loader, Bobcat T770 Compact Track Loader, 2-CAT Dump Trucks, 1-Case IH 9280 Tractor, 1-ROME TAW-20S Wheel Offset Disc Harrow, 1-Bobcat E50 R2 Compact Excavator, 1-John Deere 135G Excavator, 1-Fuel Truck, 1-CAT D6T LGP Dozer, 1-4,000 Gal. Water Truck, 1-CAT CP56B Compactor, 1-SANY SY265C LC Long-Reach Excavator

Work Areas/Boundaries

Existing Ash Pond

Testing Equipment Used/Observed and Calibration/Re-Calibration Documentation

NA

Tests Completed/Observed

NA

Work Comments/Observations and Test Results

Prior to 10:30 - Contractor removed brush piles from the perimeter of the site. SCS performed office administartion tasks offsite. SCS onsite when contractor began work inside the ash pond.
10:30 - Crew continued trenching for the east run of contact water collection pipe. Geotextile fabric and drainage aggregate were placed in the bottom of the trench. The contractor had pumps running to dewater various areas of the contact water pipe trench.
11:00 - SCS Staff walked the site to observe the impacts from the rain the night before and to document the removal of the vegetation piles from the perimeter of the existing ash pond that occured earlier in the morning.
1:30 - Crew worked on spreading out the ash pile located near the existing concrete pad.
2:00 - The contractor began excavating the contact water collection storage area.
2:00 - The contractor turned on the pump to dewater the southeast corner of the existing ash pond.
6:15 - The contractor began cleaning out the sump hole near the northwest corner of the contact water collection system where the clay liner had been disturbed.

Material(s) Delivered to Site

Sand

Construction Observer

Chris Calhoun

SCS ENGINEERS

DAILY FIELD ACTIVITIES REPORT

Client Name:	Ames Municipal Electric System	**Date:**	June 18, 2024
SCS Engineers Project Name:	Ames Ash Pond Closure	**Start Time:**	7:30 AM
SCS Engineers Project No:	27219356.02	**Stop Time:**	7:30 PM
Project Location:	Ames Municipal Electric System Ash Ponds Ames, Iowa		

Task: *Contact Water Collection Pipe, Ash Excavation*

Weather Information

86°, Cloudy, Winds from S at 20 mph

Contractors, Personnel, and Equipment On Site

Contractors: JB Holland
Personnel: 10
Equipment: 1-John Deere 380G LC Excavator, 1-John Deere 200D LC Excavator, 1-CAT D6N LGP Dozer, 1-MTS 3630T Construction Tractor, John Deere 624K Loader, Bobcat T770 Compact Track Loader, 2-CAT Dump Trucks, 1-Case IH 9280 Tractor, 1-ROME TAW-20S Wheel Offset Disc Harrow, 1-Bobcat E50 R2 Compact Excavator, 1-John Deere 135G Excavator, 1-Fuel Truck, 1-CAT D6T LGP Dozer, 1-4,000 Gal. Water Truck, 1-CAT CP56B Compactor, 1-SANY SY265C LC Long-Reach Excavator

Work Areas/Boundaries

Existing Ash Pond

Testing Equipment Used/Observed and Calibration/Re-Calibration Documentation

NA

Tests Completed/Observed

NA

Work Comments/Observations and Test Results

8:00 - The contractor excavated ash from the mound on the west side of the closure area.
8:00 - The contractor continued excavation of the bench adjacent to the proposed east run of contact water collection pipe.
8:30 - The contractor continued excavating wet ash out of the southeast corner of the existing ash pond with a long-reach excavator.
9:30 - The contractor used a dozer to begin pushing ash over the south contact water collection pipe trench. This ash was pushed from the top of the large ash mound in the central part of the closure area.
10:45 - The contractor excavated ash from a soft spot in the bridge lift over the west contact water collection pipe. The excavated area was then backfilled with dryer material.
11:30 - Crew continued trenching for the south run of contact water collection pipe. Geotextile fabric and drainage aggregate were placed in the bottom of the trench..
1:00 - Once pipe had been placed in the trench and welded to the previously installed section of pipe, SCS surveyed the top of pipe elevations.
1:30 - Crew began trenching for the east run of contact water collection pipe. Sand was placed in the trench with a long-reach excavator.
1:30 - Crew began compacting the bridge lift over the west contact water collection pipe.
2:45 - The contractor performed a proof roll on the bridge lift with a loaded dump truck. During the proof roll, the dumptruck's wheels sunk in above the western edge of the pipe trench.
3:30 - Crew began excavating a trench in the sand to install the geotextile fabric and drainage aggregate for the east contact water collection pipe.
4:00 - The contractor continued using a compactor on the bridge lift over the west contact water collection pipe.
4:15 - Crew began backfilling over the installed portion of south contact water collection pipe with drainage aggregate. The geotexile fabric was then closed and covered with sand. The contractor used a dozer to cover the installed portion of pipe with ash.
6:00 - Crew compacted the lift of ash over the south contact water collection pipe.
7:00 - Crew began installing pipe in the east contact water collection trench. Once the pipe was installed, SCS surveyed the top of pipe.
7:15 - The contractor began backfilling the trench with drainage aggregate.

Material(s) Delivered to Site

Sand

Construction Observer

Chris Calhoun

SCS ENGINEERS

DAILY FIELD ACTIVITIES REPORT

Client Name:	Ames Municipal Electric System	**Date:**	June 17, 2024
SCS Engineers Project Name:	Ames Ash Pond Closure	**Start Time:**	8:00 AM
SCS Engineers Project No:	27219356.02	**Stop Time:**	7:00 PM
Project Location:	Ames Municipal Electric System Ash Ponds Ames, Iowa		

Task: *Ash Excavation, Ash Placement*

Weather Information

91°, Cloudy, Winds from S at 15 mph

Contractors, Personnel, and Equipment On Site

Contractors: JB Holland
Personnel: 8
Equipment: 1-John Deere 380G LC Excavator, 1-John Deere 200D LC Excavator, 1-CAT D6N LGP Dozer, 1-MTS 3630T Construction Tractor, John Deere 624K Loader, Bobcat T770 Compact Track Loader, 2-CAT Dump Trucks, 1-Case IH 9280 Tractor, 1-ROME TAW-20S Wheel Offset Disc Harrow, 1-Bobcat E50 R2 Compact Excavator, 1-John Deere 135G Excavator, 1-Fuel Truck, 1-CAT D6T LGP Dozer, 1-4,000 Gal. Water Truck, 1-CAT CP56B Compactor, 1-SANY SY265C LC Long-Reach Excavator

Work Areas/Boundaries

Existing Ash Pond

Testing Equipment Used/Observed and Calibration/Re-Calibration Documentation

NA

Tests Completed/Observed

NA

Work Comments/Observations and Test Results

8:30 - The contractor disked ash in the eastern drying area, north of the east clearwater pond.
8:30 - The contractor continued excavation of the bench adjacent to the proposed south run of contact water collection pipe. Excavated ash from this activity was hauled near the installed west contact water collection pipe to prepare for placement of the bridge lift.
9:00 - The contractor disked ash along the northern boundary of the existing ash pond.
9:30 - The contractor used a dozer to begin pushing ash over the west contact water collection pipe trench. Ash continued to be spread out over this area throughought the day.
9:30 - Crew applied water to the roadways for dust control.
10:45 - The contractor used an excavator to cut-back the east side of the west contact water collection pipe trench to better facilitate the placement of ash for the bridge lift.
11:00 - The contractor began excavating ash from the mound north of the east clearwater pond. Excavated ash was hauled to the west for use in the bridge lift over the west contract water collection pipe.
1:00 - The contractor utilized a long-reach excavator to begin excavating the trench for the east run of contact water collection pipe. Excavated ash was placed to the east to dry.
2:00 - The contractor began working on the bench for installation of the east run of contact water collection pipe.
2:45 - The contractor began backfilling the excavated trench area with dryer ash material.
3:00 - Crew disked ash in the far eastern portion of the existing ash pond.
5:00 - The contractor used the long-reach excavator to excavate ash from the southeast corner of the existing ash pond. Excavated ash was placed on the sideslope to dry.

Material(s) Delivered to Site

Crane Mats

Construction Observer

Chris Calhoun

SCS ENGINEERS

DAILY FIELD ACTIVITIES REPORT

Client Name:	Ames Municipal Electric System	**Date:**	June 14, 2024
SCS Engineers Project Name:	Ames Ash Pond Closure	**Start Time:**	7:30 AM
SCS Engineers Project No:	27219356.02	**Stop Time:**	2:45 PM
Project Location:	Ames Municipal Electric System Ash Ponds Ames, Iowa		

Task: *Contact Water Collection Pipe, Ash Excavation*

Weather Information

88°, Sunny, Winds from NW at 10 mph

Contractors, Personnel, and Equipment On Site

Contractors: JB Holland
Personnel: 8
Equipment: 1-John Deere 380G LC Excavator, 1-John Deere 200D LC Excavator, 1-CAT D6N LGP Dozer, 1-MTS 3630T Construction Tractor, John Deere 624K Loader, Bobcat T770 Compact Track Loader, 2-CAT Dump Trucks, 1-Case IH 9280 Tractor, 1-ROME TAW-20S Wheel Offset Disc Harrow, 1-Bobcat E50 R2 Compact Excavator, 1-John Deere 135G Excavator, 1-Fuel Truck, 1-CAT D6T LGP Dozer, 4,000 Gal. Water Truck

Work Areas/Boundaries

Existing Ash Pond

Testing Equipment Used/Observed and Calibration/Re-Calibration Documentation

NA

Tests Completed/Observed

NA

Work Comments/Observations and Test Results

7:30 - The contractor continued working to create the bench adjacent to the proposed south run of contact water collection pipe.
8:00 - The contractor continued bailing wet ash with a dozer from the southeast corner of the exsiting ash pond. An excavator was used to scoop out the wet ash and a dumptruck hauled the ash to the northeast area of the existing ash pond to dry.
9:45 - Crew began excavating the trench for the south run of contact water collection pipe. Excavated ash was hauled to the drying areas in the eastern portion of the existing ash pond.
10:30 - Crew began placing geotextile fabric and drainage aggregate in the trench.
10:45 - Crew began placing pipe in the trench and welding it to the pipe that had been installed the day prior.
12:45 - The contractor used a dozer to spread out the wet ash in the eastern portion of the existing ash pond.
1:45 - After SCS surveyed the collection pipe, the contractor began backfilling the south contact water collection trench with drainage aggregate.
2:15 - The contractor began closing the geotextile fabric and covering the trench with sand.

Material(s) Delivered to Site

NA

Construction Observer

Chris Calhoun

SCS ENGINEERS

DAILY FIELD ACTIVITIES REPORT

Client Name:	Ames Municipal Electric System	**Date:**	June 13, 2024
SCS Engineers Project Name:	Ames Ash Pond Closure	**Start Time:**	7:30 AM
SCS Engineers Project No:	27219356.02	**Stop Time:**	6:30 PM
Project Location:	Ames Municipal Electric System Ash Ponds Ames, Iowa		

Task: *Contact Water Collection Pipe, Ash Excavation*

Weather Information

88°, Sunny, Winds from N at 15 mph

Contractors, Personnel, and Equipment On Site

Contractors: JB Holland
Personnel: 6
Equipment: 1-John Deere 380G LC Excavator, 1-John Deere 200D LC Excavator, 1-CAT D6N LGP Dozer, 1-MTS 3630T Construction Tractor, John Deere 624K Loader, Bobcat T770 Compact Track Loader, 2-CAT Dump Trucks, 1-Case IH 9280 Tractor, 1-ROME TAW-20S Wheel Offset Disc Harrow, 1-Bobcat E50 R2 Compact Excavator, 1-John Deere 135G Excavator, 1-Fuel Truck, 1-CAT D6T LGP Dozer, 4,000 Gal. Water Truck

Work Areas/Boundaries

Existing Ash Pond

Testing Equipment Used/Observed and Calibration/Re-Calibration Documentation

NA

Tests Completed/Observed

NA

Work Comments/Observations and Test Results

7:00 - The contractor continued trenching and placing geotextile fabric and drainage aggregate for the west contact water collection pipe.
9:00 - The contractor began placing pipe into the trench.
9:15 - The crew began welding the new pipe to the previously installed section of pipe.
9:45 - SCS surveyed the installed pipe sections.
10:00 - The contractor disced ash in the eastern drying areas of the existing ash pond.
10:15 - The contractor began backfilling the contact water collection trench with drainage aggregate.
11:00 - Crew began fusion welding the tee and cleanout stubs in the northwest corner of the closure area.
11:00 - The contractor began closing the geotextile fabric and covering the trench with sand.
1:00 - Crew began using an excavator to move ash on the top of the large mound in the central area of the existing ash pond.
1:45 - Crew began welding the fittings and pipe for the cleanout stubs in the southwest corner of the closure area.
2:00 - Crew began welding the tee and cleanout stubs to the installed portion of contact water collection pipe in the southwest corner of the closure area.
3:15 - The contractor finished with pipe installation for the day. SCS surveyed the installed pipe in the southwest corner of the closure area.
3:45 - A water truck arrived to the site to apply water to the perimeter roads for dust control.
4:00 - The contractor worked on creating the bench adjacent to the proposed south run of contact water collection pipe.
4:00 - Crew continued excavating ash from the slope in the southeast corner of the existing ash pond. Ash was hauled to the northeast corner of the existing ash pond and spread out with a dozer to dry.
5:15 - The contractor utilized a dozer to bail wet ash from the bottom of the existing ash pond in the southeast corner. An excavator was used to excavate out the wet ash. A dumptruck then hauled the ash to the northeast area of the existing ash pond to dry.

Material(s) Delivered to Site

NA

Construction Observer

Chris Calhoun

SCS ENGINEERS

DAILY FIELD ACTIVITIES REPORT

Client Name:	Ames Municipal Electric System	**Date:**	June 12, 2024
SCS Engineers Project Name:	Ames Ash Pond Closure	**Start Time:**	7:30 AM
SCS Engineers Project No:	27219356.02	**Stop Time:**	7:00 PM
Project Location:	Ames Municipal Electric System Ash Ponds Ames, Iowa		

Task: *Ash Excavation, Dewatering, Contact Water Collection Pipe*

Weather Information

88°, Partly Cloudy, Winds from SW at 20 mph

Contractors, Personnel, and Equipment On Site

Contractors: JB Holland
Personnel: 7
Equipment: 1-John Deere 380G LC Excavator, 1-John Deere 200D LC Excavator, 1-CAT D6N LGP Dozer, 1-MTS 3630T Construction Tractor, John Deere 624K Loader, Bobcat T770 Compact Track Loader, 2-CAT Dump Trucks, 1-Case IH 9280 Tractor, 1-ROME TAW-20S Wheel Offset Disc Harrow, 1-Bobcat E50 R2 Compact Excavator, 1-John Deere 135G Excavator, 1-Fuel Truck, 1-CAT D6T LGP Dozer

Work Areas/Boundaries

Existing Ash Pond

Testing Equipment Used/Observed and Calibration/Re-Calibration Documentation

NA

Tests Completed/Observed

NA

Work Comments/Observations and Test Results

7:30 - The contractor placed additional sand on top of the installed portion of contact water collection pipe.
8:30 - The contractor began using an excavator to cut down the portion of the access road that was located over the proposed south run of contact water collection pipe. Excavated ash from this area was hauled to a central area of the site and spread out with a dozer.
9:30 - The contractor used a disk harrow to till ash in the eastern portion of the existing ash pond.
10:45 - Sand continued to be delivered to the site.
10:45 - Crew began welding pipe for the contact water collection cleanouts.
12:30 - Using an excavator, crew cleaned out the area of the contact water collection trench adjacent to the trench wall sloughing the day prior.
1:30 - The contractor began hauling previously excavated ash from the uppermost bench adjacent to the west contact water collection trench. The ash was hauled to a central area of the site and spread out with a dozer.
2:00 - The contractor used the compact excavator to smooth out the sand in the contact water collection trench.
3:30 - The contractor began positioning equipment to continue installing contact water collection pipe.
4:30 - Using the compact excavator, crew continued to excavate an approximately 2'x2' trench in the sand for the west contact water collection pipe. After the trench was created, geotextile fabric was placed in the bottom of the trench and approximately 4" of drainage aggregate was placed on top of the fabric inside the trench.
6:15 - The contractor began to lower a section of pipe into the contact water collection trench.
6:30 - The crew began welding the new pipe to the previously installed section of pipe.
6:45 - SCS surveyed the top of pipe for the installed pipe section.
6:50 - The contractor began backfilling the pipe trench with drainage aggregate and closed the geotextile fabric.

Material(s) Delivered to Site

Sand

Construction Observer

Chris Calhoun

SCS ENGINEERS

DAILY FIELD ACTIVITIES REPORT

Client Name:	Ames Municipal Electric System	**Date:**	June 11, 2024
SCS Engineers Project Name:	Ames Ash Pond Closure	**Start Time:**	7:30 AM
SCS Engineers Project No:	27219356.02	**Stop Time:**	7:00 PM
Project Location:	Ames Municipal Electric System Ash Ponds Ames, Iowa		

Task: *Ash Excavation, Dewatering, Contact Water Collection Pipe*

Weather Information

88°, Sunny, Winds from SW at 15-20 mph. 30 min of light rain in the morning.

Contractors, Personnel, and Equipment On Site

Contractors: JB Holland
Personnel: 7
Equipment: 1-John Deere 380G LC Excavator, 1-John Deere 200D LC Excavator, 1-CAT D6N LGP Dozer, 1-MTS 3630T Construction Tractor, John Deere 624K Loader, Bobcat T770 Compact Track Loader, 2-CAT Dump Trucks, 1-Case IH 9280 Tractor, 1-ROME TAW-20S Wheel Offset Disc Harrow, 1-Bobcat E50 R2 Compact Excavator, 1-John Deere 135G Excavator, 1-Fuel Truck, 1-CAT D6T LGP Dozer

Work Areas/Boundaries

Existing Ash Pond

Testing Equipment Used/Observed and Calibration/Re-Calibration Documentation

NA

Tests Completed/Observed

NA

Work Comments/Observations and Test Results

8:00 - The contractor utilized a dozer to spread ash out on the drying surface in the northeast corner of the existing ash pond.
8:30 - The contractor filled in sumps from dewatering activities with sand to prepare for excavation of the contact water pipe trench.
9:30 - Starting in the southwest corner of the site, the contractor used the compact excavator to create an approximately 2'x2' trench in the sand for installation of the west contact water collection pipe. After the trench was created, geotextile fabric was placed in the bottom of the trench and approximately 4" of drainage aggregate was placed on top of the fabric inside the trench.
11:00 - The contractor began discing ash on the north side of the existing ash pond.
11:30 - A portion of the trench holding adjacent to the sand for the contact water collection pipe sloughed approximately 100' north of the southwest corner of the trench. The contractor hauled over soil from one of the general stockpiles on-site in attempt to restabilize this area.
12:00 SCS tied-into the site's survey control system.
1:00 - The contractor spent a majority of the afternoon troubleshooting how to proceed with excavating the contact water collection pipe trench. The crew continued to dewater the trench.
4:30 - The contractor continued excavating ash from the south slope in the southeast corner of the existing ash pond. The ash was hauled to an area just north of the existing concrete pad near the east clearwater pond.
5:45 - The contractor began to lower a section of pipe into the constructed portion of the contact water collection pipe trench.
6:10 - SCS surveyed the top of pipe for the installed pipe section.
6:20 - The contractor began backfilling the pipe trench with drainage aggregate. Crew closed the geotextile fabric over the aggregate and covered the top of the trench with approximately 1' of sand.

Material(s) Delivered to Site

NA

Construction Observer

Chris Calhoun, Brandon Suchomel

SCS ENGINEERS

DAILY FIELD ACTIVITIES REPORT

Client Name:	Ames Municipal Electric System	**Date:**	June 10, 2024
SCS Engineers Project Name:	Ames Ash Pond Closure	**Start Time:**	7:30 PM
SCS Engineers Project No:	27219356.02	**Stop Time:**	6:30 PM
Project Location:	Ames Municipal Electric System Ash Ponds Ames, Iowa		

Task: *Ash Excavation, Dewatering, Contact Water Collection Pipe*

Weather Information

76°, Sunny, Winds from NE at 5 mph

Contractors, Personnel, and Equipment On Site

Contractors: JB Holland
Personnel: 7
Equipment: 1-John Deere 380G LC Excavator, 1-John Deere 200D LC Excavator, 1-CAT D6N LGP Dozer, 1-MTS 3630T Construction Tractor, John Deere 624K Loader, Bobcat T770 Compact Track Loader, 2-CAT Dump Trucks, 1-Case IH 9280 Tractor, 1-ROME TAW-20S Wheel Offset Disc Harrow, 1-Bobcat E50 R2 Compact Excavator, 1-John Deere 135G Excavator, 1-Fuel Truck

Work Areas/Boundaries

Existing Ash Pond

Testing Equipment Used/Observed and Calibration/Re-Calibration Documentation

NA

Tests Completed/Observed

NA

Work Comments/Observations and Test Results

The contractor started the morning using a disk harrow to till the ash in the eastern portion of the site. Around the same time, another crew started transporting lengths of pipe over to prepare for welding. Two crew members then started welding pipe lengths together for the west contact water collection pipe. For the remainder of the day there were two main activities performed, dewatering and ash excavation. Dewatering efforts were focused in the west contact water collection pipe trench and the southeast corner of the existing ash pond. Ash excavation was also occuring in the southeast corner of the existing pond. The contractor used a dozer to push the wet ash out from the bottom of this area. The excavated ash was spread out over the previously tilled ash to dry. In the afternoon, a dump truck became stuck just north of where excavation was occuring. The contractor was able to pull the dumptruck out using the other dumptruck onsite as well as two excavators.

Material(s) Delivered to Site

Drainage Aggregate

Construction Observer

Chris Calhoun

SCS ENGINEERS

DAILY FIELD ACTIVITIES REPORT

Client Name:	Ames Municipal Electric System	**Date:**	June 6, 2024
SCS Engineers Project Name:	Ames Ash Pond Closure	**Start Time:**	12:30 PM
SCS Engineers Project No:	27219356.02	**Stop Time:**	6:00 PM
Project Location:	Ames Municipal Electric System Ash Ponds Ames, Iowa		

Task: *West Contact Water Collection Pipe Trench*

Weather Information

76°, Sunny, Winds from WNW at 22 mph

Contractors, Personnel, and Equipment On Site

Contractors: JB Holland
Personnel: 6
Equipment: 1-John Deere 380G LC Excavator, 1-John Deere 200D LC Excavator, 1-CAT D6N LGP Dozer, 1-MTS 3630T Construction Tractor, John Deere 624K Loader, Bobcat T770 Compact Track Loader, 2-CAT Dump Trucks

Work Areas/Boundaries

Existing Ash Pond

Testing Equipment Used/Observed and Calibration/Re-Calibration Documentation

NA

Tests Completed/Observed

NA

Work Comments/Observations and Test Results

The contractor spent the majority of the day excavating the west contact water collection pipe trench. After portions of the trench were excavated, the contractor filled with approximately 2 feet of sand. The excavated ash was either placed on the access road adjacent to the trench or was hauled to the north side of the site. The contractor also started hauling dry ash to the eastern portion of the site to create a roadway platform.

Material(s) Delivered to Site

Sand Bedding

Construction Observer

Chris Calhoun

SCS ENGINEERS

DAILY FIELD ACTIVITIES REPORT

Client Name:	Ames Municipal Electric System	**Date:**	June 5, 2024
SCS Engineers Project Name:	Ames Ash Pond Closure	**Start Time:**	9:15 AM
SCS Engineers Project No:	27219356.02	**Stop Time:**	1:15 PM
Project Location:	Ames Municipal Electric System Ash Ponds Ames, Iowa		

Task: *Internal Roadways, Ash Excavation*

Weather Information

75-80°, Sunny, Winds from WSW at 15 mph

Contractors, Personnel, and Equipment On Site

Contractors: JB Holland
Personnel: 5
Equipment: 1-John Deere 380G LC Excavator, 1-John Deere 200D LC Excavator, 1-CAT D6N LGP Dozer, 1-MTS 3630T Construction Tractor, John Deere 624K Loader, 1-Bobcat T770 Compact Track Loader, 2-CAT Dump Trucks

Work Areas/Boundaries

Existing Ash Pond

Testing Equipment Used/Observed and Calibration/Re-Calibration Documentation

NA

Tests Completed/Observed

NA

Work Comments/Observations and Test Results

In the morning the contractor finished creating an access road that will be utilized to excavate the west contact water collection pipe trench. The contractor then continued excavating ash in the southeast corner of the existing ash pond near the outlet to the east clearwater pond. The contractor continued to work on establishing the roadway system for equipment traffic within the existing ash pond.

Material(s) Delivered to Site

NA

Construction Observer

Chris Calhoun

SCS ENGINEERS

CITY OF
Ames
ELECTRIC SERVICES

August 26, 2024

Ms. Amie Davidson
Bureau Chief
Land Quality Bureau
Iowa Department of Natural Resources
502 East 9th Street
Des Moines Iowa 50319

Dear Ms. Davidson:

This letter provides the Iowa Department of Natural Resources with official notification of certain events to fulfill the notification requirements of the Coal Combustion Residuals (CCR) Standard.

In accordance with the notification requirements of 40 CFR 257.106 and the "Extension of Compliance Deadlines for Certain Inactive Surface Impoundments" [81 Fed. Reg. 51802-51808 (August 5, 2016)], two documents were placed in the City of Ames Steam Electric Plant's CCR facility's operating record on August 1, 2024. The documents were:

1. The 2023-2024 Annual Groundwater Monitoring and Corrective Action Report which fulfills the "Groundwater Monitoring and Corrective Action" criteria of 40 CFR Part 257 at § 257.90 (e) and the "Recordkeeping, Notification, and Posting of Information to the Internet" requirements of §§ 257.105(h), 257.106(h), and 257.107(g)(2).
2. The Annual Inspection Report by a Qualified Professional Engineer in accordance with 40 CFR Part 257 at § 257.83(b) and the "Recordkeeping, Notification, and Posting of Information to the Internet" requirements of §§ 257.0105(g)(2), 257.106(h), and 257.107(h).

The above documents were posted on the publicly accessible CCR Web site August 26, 2024, meeting the requirements to post within 30 days of being placed in the City's operating record in accordance with the requirements of § 257.107(d).

If you have any questions, please contact me at 515-239-5176 or email me at curtis.spence@cityofames.org.

Sincerely,

Curtis Spence
Assistant Director – Electric Services
Ames Municipal Electric system
City of Ames, Iowa

CITY OF
Ames
ELECTRIC SERVICES

September 9, 2024

Brian Rath, P.E.
Environmental Engineer Senior
Solid Waste and Contaminated Sites Section
Iowa Department of Natural Resources
6200 Park Ave, Suite 200
Des Moines, IA 50321

RE: Semi-annual Progress Report – January 5, 2024 through June 30, 2024
Ames Surface Impoundment Closure (Permit No. 85-SDP-20-23C)
Ames Municipal Electric Services

Dear Mr. Rath:

The City of Ames Electric Services (City) submitted its first semi-annual progress report. The Iowa Department of Natural Resources (IDNR) reviewed the report and gave the City an opportunity to resubmit the progress report following a more standard format, similar to an example provided.

The following semi-annual progress report is submitted in response to the requirements of permit condition X.4 of the Sanitary Disposal Project Closure Permit. The permit was issued by IDNR on January 5, 2024 for the above referenced facility.

1. Description of actions completed during the reporting period.

The description of activities completed below includes the time period between the commencement of surface impoundment closure construction activities on June 1, 2024 and the end of the reporting period on June 30, 2024.

- Contractor mobilized to the site and began clearing and grubbing around the east pond area of the site.
- Contractor began mechanically aerating the ash material in the east pond area of the site to dry it out.
- Underground contact water pipes were installed in the closure area, aggregate was placed around the pipes, and ash material was backfilled over the aggregate.

2. Description of problems encountered during the reporting period and actions taken to resolve problems.

The ash has a higher moisture content than anticipated. The contractor was encouraged to continue mechanical aeration.

3. Description of actions anticipated to be performed during the next reporting period.

The next reporting period includes the time period between July 1, 2024 and December 31, 2024.

CITY OF
Ames
ELECTRIC SERVICES

- Construction activities are anticipated to continue. Construction of the separation berm, forming the east boundary of the closure area will be completed.
- The remaining CCR material will be placed and compacted, moved from the east side of the impoundment into the closure area.
- Work will continue into the winter as long as weather allows.

If you have questions about this correspondence, please contact Curtis Spence at 515-239-5171 or me at 515-239-5173.

Sincerely,

Kris Evans

Kris Evans, Ph.D., P.E.
Power Plant Engineer

Ames Municipal Electric Services

515.239.5170 *main*
515.239.5308 *fax*

502 Carroll Ave.
Ames, IA 50010
www.CityofAmes.org

CITY OF
Ames
ELECTRIC SERVICES

January 23, 2025

Brian Rath, P.E.
Environmental Engineer Senior
Solid Waste and Contaminated Sites Section
Iowa Department of Natural Resources
6200 Park Ave, Suite 200
Des Moines, IA 50321

RE: Semi-annual Progress Report – July 1, 2024 through December 31, 2024
Ames Surface Impoundment Closure (Permit No. 85-SDP-20-23C)
Ames Municipal Electric Services

Dear Mr. Rath:

The following semi-annual progress report is submitted in response to the requirements of permit condition X.4 of the Sanitary Disposal Project Closure Permit. The permit was issued by IDNR on January 5, 2024 for the above referenced facility.

1. Description of actions completed during the reporting period.

The description of activities completed below includes the time period between July 1, 2024 and the end of the reporting period on December 31, 2024.

- CCR material was placed and compacted in the closure area.
- Separation berm on east side of closure area was constructed and completed.
- Contractor prepared site for winter shut down.
- Winter shut down occurred on October 28, 2024

2. Description of problems encountered during the reporting period and actions taken to resolve problems.

The following issues were reviewed and direction was provided by the engineer of record on the project.

- CCR material was found outside the original project survey, but within the plant pond area. The material was excavated and moved to the Closure Area.
- General fill soil was placed around the side slopes after CCR material was moved to the Closure Area to improve slope stability adjacent to the access road.
- Closure Area contact water collection pipe risers will be extended and directed through the final cover with pipe boots to avoid conflicts with perimeter drainage features.
- Storm water pipes from the Closure Area will be corrugated polyethylene pipes (CPEP) instead of high-density polyethylene (HDPE) pipes.

CITY OF
Ames
ELECTRIC SERVICES

3. Description of actions anticipated to be performed during the next reporting period.

The next reporting period includes the time period between January 1, 2025 and June 30, 2025.

- Construction activities are anticipated to resume around March 1, 2025.
- The remaining CCR material will be placed and compacted, moved from the east side of the impoundment into the closure area.
- The Closure Area will be capped according to the plans.

If you have questions about this correspondence, please contact Curtis Spence at 515-239-5176 or me at 515-239-5173.

Sincerely,

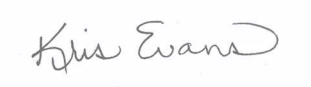

Kris Evans, Ph.D., P.E.
Power Plant Engineer

CITY OF
ames
ELECTRIC SERVICES

July 28, 2025

Brian Rath, P.E.
Environmental Engineer Senior
Solid Waste and Contaminated Sites Section
Iowa Department of Natural Resources
6200 Park Ave, Suite 200
Des Moines, IA 50321

RE: Semi-annual Progress Report – January 1, 2025 through June 30, 2025
Ames Surface Impoundment Closure (Permit No. 85-SDP-20-23C)
Ames Municipal Electric Services

Dear Mr. Rath:

The following semi-annual progress report is submitted in response to the requirements of permit condition X.4 of the Sanitary Disposal Project Closure Permit. The permit was issued by IDNR on January 5, 2024 for the above referenced facility.

1. Description of actions completed during the reporting period.

The description of activities completed below includes the time period between January 1, 2025 and the end of the reporting period on June 30, 2025.

- CCR material was placed and compacted in the closure area.
- Liner material placed over closure area
- Cover material placed over closure area
- Leachate vault installed

2. Description of problems encountered during the reporting period and actions taken to resolve problems.

The following issues were reviewed and direction was provided by the engineer of record on the project.

- The proposed limits of ash excavation at the perimeter of the Closure Area were extended several feet to the south and west to remove ash that was located below the perimeter access roads. The excavated ash was placed under the Closure Area final cover system. The areas excavated below the roads were backfilled with general fill and will be restored with road aggregate.

- A pipe conflict between 24-inch stormwater pipe and the 18-inch contact water collection system riser pipe required the ash excavation limits to be adjusted further into the Closure Area, reducing the final footprint of the Closure Area. This pipe conflict also resulted in minor changes to the alignment of the Closure Area southern perimeter swale, related drainage features, and the contact water vault. The limits of ash excavation, contact water system, and perimeter drainage features will be submitted with the Construction Documentation Report.

- The proposed final cover system grades are lower than designed, because the excavated and relocated ash consolidated during pond closure activities. Minimum slopes in the approved Pond

CITY OF
ames
ELECTRIC SERVICES

Closure Plan were maintained. Final cover grades will be submitted with the Construction Documentation Report.

3. Description of actions anticipated to be performed during the next reporting period.

The next reporting period includes the time period between July 1, 2025 and December 31, 2025.

- Leachate collection system start up
- Final site stabilization

If you have questions about this correspondence, please contact Curtis Spence at 515-239-5176 or me at 515-239-5173.

Sincerely,

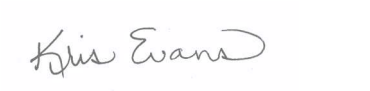

Kris Evans, Ph.D., P.E.
Power Plant Engineer

CITY OF
Ames
ELECTRIC SERVICES

August 27, 2025

Ms. Amie Davidson
Bureau Chief
Land Quality Bureau
Iowa Department of Natural Resources
502 East 9th Street
Des Moines Iowa 50319

Dear Ms. Davidson:

This letter provides the Iowa Department of Natural Resources with official notification of certain events to fulfill the notification requirements of the Coal Combustion Residuals (CCR) Standard.

In accordance with the notification requirements of 40 CFR 257.106 and the "Extension of Compliance Deadlines for Certain Inactive Surface Impoundments" [81 Fed. Reg. 51802-51808 (August 5, 2016)], four documents were placed in the City of Ames Steam Electric Plant's CCR facility's operating record on July 31, 2025. The documents were:

1. The Annual CCR Fugitive Dust Control Report in accordance with 40 CFR Part 257 at § 257.80 (c) and the "Recordkeeping, Notification, and Posting of Information to the Internet" requirements of §§ 257.105(g)(2), 257.106(g)(2), and 257.107(g)(2).
2. The Annual Inspection Report by a Qualified Professional Engineer in accordance with 40 CFR Part 257 at § 257.83(b) and the "Recordkeeping, Notification, and Posting of Information to the Internet" requirements of §§ 257.0105(g)(2), 257.106(g)(2), and 257.107(g)(2).
3. The 2024-2025 Annual Groundwater monitoring and Corrective Action Report which fulfills the "Ground Water Monitoring and Corrective Action" criteria of 40 CFR Part 257 at § 257.90(e) and the "Recordkeeping, Notification, and Posting of Information to the Internet" requirements of §§ 257.105(g)(2), 257.106(g)(2), and 257.107(g)(2).
4. The annual Inspection Report by a Qualified Professional Engineer in accordance with 40 CFR Part 257 at § 257.83(b) and the "Recordkeeping, Notification, and Posting of Information to the Internet" requirements of §§ 257.105(g)(2), 257.106(g)(2), and 257.107(g)(2).

The above documents were posted on the publicly accessible CCR Web site on July 31, 2025; within 30 days of being placed in the City's operating record in accordance with the requirements of § 257.107(d).

Ames Municipal Electric Services
515.239.5170 main
515.239.5308 fax
502 Carroll Ave.
Ames, IA 50010
www.CityofAmes.org

CITY OF
Ames
ELECTRIC SERVICES

If you have any questions, please contact me at 515-239-5170 or email me at curtis.spence@cityofames.org.

Sincerely,

Curtis Spence
Assistant Director – Electric Services
Ames Municipal Electric system
City of Ames, Iowa

A.2 – Permits

January 5, 2024

KRIS EVANS
POWER PLANT ENGINEER
AMES MUNICIPAL ELECTRIC SYSTEM
502 CARROLL AVENUE
AMES IA 50010

Re: Ames Municipal Electric System
Main Ash Pond - Impoundment Closure Permit
Permit #85-SDP-20-23C (previously 85-UDP-01-15)

Dear Ms. Evans:

Enclosed is the closure permit for Ames Municipal Electric System's Coal Combustion Residue Surface Impoundment (i.e. Main Ash Pond). Please review this closure permit with the personnel responsible for conducting closure and maintaining the site.

Note that this permit contains Special Conditions that may require a response or action by you, which if not properly complied with, may prompt enforcement action by the Iowa Department of Natural Resources (DNR). Of particular importance is Special Condition #5, which requires the submittal of a final closure compliance report certifying that unit closure has been implemented in compliance with 40 C.F.R. 257.102, the approved closure design plans, and this permit.

Furthermore, this closure permit applies to the solid waste program and does not constitute authorization by all DNR program areas. Any additional approvals for site closure shall be obtained from the appropriate programs within the DNR.

Thank you for your efforts to comply with Iowa's environmental regulations. Should you have any questions, please contact me at (515) 201-8272 or Chad.Stobbe@dnr.iowa.gov.

Sincerely,

Digitally signed by Chad A. Stobbe
Date: 2024.01.05 10:20:02 -06'00'

Chad A. Stobbe
Environmental Specialist Senior
Land Quality Bureau

Enclosure

cc: Iowa DNR Field Office #5, Des Moines

IOWA DEPARTMENT OF NATURAL RESOURCES
SANITARY DISPOSAL PROJECT CLOSURE PERMIT

I. **Permit Number**: 85-SDP-20-23C

II. **Permitted Agency:** Ames Municipal Electric System

III. **Project Location:** 1000 East 13th Street
Ames, IA 50010
(Parcel ID #09-01-300-010)

IV. **Responsible Official:**

Name:	Kris Evans, Power Plant Engineer
Address:	Ames Municipal Electric System Ames Steam Electric Plant 502 Carroll Avenue Ames, IA 50010
Email:	kristin.evans@cityofames.org
Phone:	(515) 239-5173

V. **Licensed Design Engineer:**

Name:	Christine L. Collier, P.E.
Address:	SCS Engineers 1690 All-State Court, Suite 100 West Des Moines, IA 50265
Email:	ccollier@scsengineers.com
Phone:	(515) 631-6160
Iowa License No.:	P17963

VI. **Date Permit Issued:** January 5, 2024

VII. **Date Post-Closure Begins** (*est. February 1, 2025*)[1]

VIII. **Date Post-Closure Ends:** (*February 1, 2055*)[1]

[1] Upon completion of closure as required in this permit, the DNR will amend this permit with the appropriate dates denoting the post-closure period.

IX. **Issued by:** Digitally signed by Chad A. Stobbe
Date: 2024.01.05 10:21:14 -06'00'

Environmental Services Division
for the Director

X. Special Conditions

1. The above-named permitted agency is hereby authorized to close the above-referenced coal combustion residual (CCR) surface impoundment at the described location in conformance with 40 C.F.R. 257, Subpart D and Iowa Code Chapter 455B, Division IV "Solid Waste Disposal", Part 1 "Solid Waste," the rules pursuant thereto existing at the time of issuance (567 IAC 102.2(4)), and any subsequent new rules which may be duly adopted, and any provisions contained in Section X of this permit.

2. The permit holder shall ensure that the closed CCR surface impoundment does not (1) cause a discharge of pollutants into waters of the United States, including wetlands, that violates any requirements of the Clean Water Act, including, but not limited to, the National Pollutant Discharge Elimination System (NPDES) requirements, pursuant to Section 402 of the Clean Water Act, and (2) cause the discharge of a nonpoint source of pollution into waters of the United States, including wetlands, that violates any requirement of an areawide or statewide water quality management plan that has been approved under Section 208 or 319 of the Clean Water Act.

3. The permit holder shall close the CCR surface impoundment through a combination of removal of CCR and closure in place in accordance with 40 C.F.R. Part 257.102(c) and (d), the hereby-approved closure plan and construction quality assurance (CQA) plan, and final design drawings (Doc #107504 and Doc #108099), as submitted by SCS Engineers. The CCR surface impoundment(s) shall be closed in a manner that will:

    a. Control, minimize or eliminate, to the maximum extent feasible, post-closure infiltration of liquids into the waste and releases of CCR, leachate, or contaminated run-off to the ground or surface waters or to the atmosphere;

    b. Preclude the probability of future impoundment of water, sediment, or slurry. All diversion and drainage structures must be maintained to prevent run-on and runoff erosion, or other damage to the final cover;

    c. Include measures that provide for major slope stability to prevent the sloughing or movement of the final cover system during the closure and post-closure care period;

    d. Minimize the need for further maintenance of the closed surface impoundment; and

    e. Be completed in the shortest amount of time consistent with recognized and generally accepted good engineering practices.

4. The permit holder shall submit semi-annual progress reports to the Iowa Department of Natural Resources (DNR) that summarize the progress of closure implementation, including a description of the actions completed to date, any problems encountered and a description of the actions taken to resolve the problems, and pending project closure activities. The first

semi-annual progress report shall be submitted to the DNR no later than July 31, 2024, and semi-annually thereafter (i.e., July 31st, January 31st) until submittal of the final closure compliance report and written notification by the DNR stating that semi-annual progress reports are no longer required.

5. The permit holder shall submit a final closure compliance report to the DNR within sixty (60) days of completing the closure of the CCR surface impoundment. The report shall be certified by a professional engineer licensed in the State of Iowa and confirm that the CCR surface impoundment closure has been implemented in compliance with the approved closure plan, CQA plan, final design drawings, and this permit (pursuant to 40 C.F.R. 257.102(f)(3)). Written approval by the DNR of the final closure compliance report shall designate the start of the post-closure care period. The following information shall also be included in the final closure compliance report:

    a. As-built plans and documentation of final cover system construction; including cap thickness, final slopes, diversion and drainage structures, and vegetation.

    b. A copy of the notation filed with the county recorder showing, for the purposes of the title abstract, the existence of a CCR surface impoundment on the property.

    c. Permanent survey monuments set by a land surveyor licensed in the State of Iowa from which the location and elevation of the final cover system can be determined.

6. Upon written approval of the final closure compliance report, the permit holder shall commence annual inspections of the closed CCR surface impoundment (records available upon DNR request). If a significant deficiency or release is identified by a qualified person during an inspection, the permit holder shall remedy the deficiency or release as soon as feasible and prepare documentation detailing the corrective measures taken. A significant deficiency jeopardizes the stability of the unit or the integrity of the final capping system, but does not include issues that can be addressed through routine maintenance (may include but are not limited to reseeding, repairs of minor rills, etc.). In those instances where a significant deficiency or release is identified, a report shall be submitted to the DNR and certified by a professional engineer licensed in the State of Iowa confirming that corrective measures undertaken were in compliance with 40 C.F.R. 257, Subpart D, and this permit.

7. Following the closure of the CCR surface impoundment, post-closure care shall continue throughout the term of this permit, or as authorized pursuant to 40 C.F.R. 257.104(c), and shall be in accordance with the post-closure plan required in 40 C.F.R. 257.104(d). At a minimum, post-closure care shall consist of at least the following:

    a. Maintaining the integrity and effectiveness of the final cover system to original specifications, including making repairs to the final cover as necessary to correct the effects of seeps, settlement, subsidence, erosion, ponding or other events, and preventing run-on and runoff from eroding or otherwise damaging the final cover;

b. Reseeding the vegetative cover as necessary to maintain good vegetative growth. Any invading vegetation whose root system could damage the compacted soil layer shall be removed or destroyed as soon as possible. The permit holder shall monitor the final cover and vegetation on a monthly basis for the first two years, and quarterly thereafter throughout the remainder of the permit term (records available upon DNR request); and

c. Maintaining the groundwater monitoring system and monitoring the groundwater in accordance with the requirements of §§257.90 through 257.98. The permit holder shall, throughout the term of this permit, submit for DNR review and comment, the annual groundwater monitoring and corrective action report pursuant to 40 C.F.R. 257.90(e).

8. All necessary measures (may include but are not limited to stormwater structures, erosion and sediment controls, dust control, etc.) shall be employed as necessary to prevent and minimize soil erosion and fugitive dust migration resulting from excavation, transport, and filling activities at the project location. Any site erosion that occurs during closure operations, and after completion of the final cover installation, shall be promptly corrected by the permit holder.

9. Pursuant to Iowa Code sections 455B.306(7)(a) and 455B.306(9), the permit holder shall establish and maintain financial assurance for the costs of conducting post-closure care and corrective action (if applicable) of the closed CCR surface impoundment. The permit holder shall adhere to the financial assurance provisions of 567 IAC 103.3(455B), and provide continuous coverage for post-closure care until released from this requirement by the DNR by demonstrating compliance with the written post-closure plan, as required in 40 C.F.R. 257.104(d), and this permit. Upon commencement of the post-closure care period, proof of compliance pursuant to 567 IAC 103.3(455B) shall be submitted by the permit holder yearly by April 1st and approved by the DNR.

   Pursuant to Iowa Code section 455B.306(12), an electric generating facility may demonstrate financial assurance by any of the instruments described in Iowa Code section 455B.301(9), or by an alternative method acceptable to the DNR. The financial assurance instrument submitted must ensure the facility's financial capability to provide reasonable and necessary response throughout the term of this permit.

10. At the end of the term of this permit, or as authorized by 567 IAC 102.2(4), and upon satisfactory completion of all required post-closure care and corrective action (if applicable) activities as established by Iowa Code chapter 455B and this permit, written notification shall be issued by the DNR stating that this permit is no longer required.

11. The issuance of this closure permit in no way relieves the permit holder of the responsibility for complying with all other local, state, and federal statutes, ordinances, and rules or other requirements applicable to the closure and maintenance of these closed CCR surface impoundments.

12. This closure permit applies to the solid waste program and does not constitute authorization by all DNR program areas. Any additional approvals, such as an NPDES permit or stormwater construction permit, shall be obtained from the appropriate programs within the DNR prior to undertaking such activities.

13. No legal or financial responsibility arising from the closure of the approved project shall attach to the State of Iowa or the DNR due to the issuance of this closure permit.

14. Failure to comply with Iowa Code chapter 455B, or any rule of order promulgated pursuant thereto, or any provisions of this permit may result in 1) a civil penalty of up to $5,000 for each day of violation, pursuant to Iowa Code section 455B.307, or 2) the suspension or revocation of this permit, pursuant to Iowa Code section 455B.305.

STATE OF IOWA
DEPARTMENT OF NATURAL RESOURCES
HENRY A. WALLACE BUILDING
DES MOINES, IOWA 50319

CONSTRUCTION PERMIT

Ames Municipal Electric System
Kristin Evans, Plant Engineer
502 Carol Avenues
Ames, IA 50010

PERMIT NO: 2024-0078S
FILE: Ames Municipal Electrical System
RE: City of Ames-Wastewater Ash Pond Reconstruction
PROJECT NO: S2020-0160B

In accordance with the provisions of Section 455B.173.3 and 455B.174.4, Code of Iowa, and Rule 567-64.2(455B) or Rule 567-65.6(455B), or Rule 567-43.3(455B) of the Iowa Administrative Code, the Director of the Department of Natural Resources does hereby issue a permit for the construction of:

A new wastewater reconstructed settling pond housing two forebays and the encapsulation of the western closure area within the footprint of an existing impoundment, the new reconstructed settling pond will have a total volume of 23.6 MG with an effective capacity of 19.9 MG, including two feet of storage and two feet of freeboard, a liner consisting of two feet of compacted clay topped with a 60-mil HDPE geomembrane, the closure area will have three feet top and bottom of compacted clay liner with the final cover encapsulated by a 40-mil LDPE geomembrane and all related appurtenances necessary to complete the project in accordance with the approved plans and specifications.

The construction of the project shall be initiated within one year of issuance of this permit or this permit is no longer valid. Within thirty (30) days after completion of construction, the permit holder shall submit a certification by a licensed professional engineer that the project is completed in accordance with the approved project documents.

If there is an increase with the hydraulic loading and/or an addition of new parameters from what the IDNR approved previously, the facility must apply for a wasteload allocation and an anti-degradation analysis prior to any construction.

The issuance of this permit in no way relieves the permittee of the responsibility for complying with any other local, state, and federal laws, ordinances, regulations or other requirements applicable to this facility.

Pursuant to Section 455B.174.4, Code of Iowa, you have the right to appeal any condition of this permit by filing with the Director of the Department of Natural Resources a notice of appeal and request for administrative hearing within thirty (30) days of receipt of this permit.

Contact Thabit Hamoud at 515-725-8432, with any questions or comments.

FOR THE DEPARTMENT OF NATURAL RESOURCES

Thabit H. Hamoud, P.E
Digitally signed by Thabit H. Hamoud, P.E
Date: 2023.09.06 15:44:52 -05'00'

KAYLA LYON, DIRECTOR

By Thabit H. Hamoud

ENVIRONMENTAL SERVICES DIVISION

September 06, 2023

cc: Iowa DNR-F.O. #5
Iowa DNR-WW File 6-85-03-0-06
Iowa DNR-Melinda Mccoy NPDS Section
SCS Engineers- Christine Collier
Iowa DNR-Chad Stobbe, Solid Waste

DEPARTMENT OF NATURAL RESOURCES
NATIONAL POLLUTANT DISCHARGE ELIMINATION SYSTEM (NPDES)
NOTICE OF GENERAL PERMIT COVERAGE UNDER
GENERAL PERMIT NO. 2

STORM WATER DISCHARGE ASSOCIATED WITH CONSTRUCTION ACTIVITY

This notice of general permit coverage for a storm water discharge associated with construction activity is issued pursuant to the authority of section 402 (b) of the Clean Water Act (U.S.C. 1342(b)), Iowa Code 455B.174, and subrule 567--64.4(2), Iowa Administrative Code. A Notice of Intent has been filed with the Iowa Department of Natural Resources that this storm water discharge complies with the terms and conditions of NPDES General Permit No. 2. Authorization is hereby issued to discharge storm water associated with industrial activity as defined in Part VIII of the Iowa Department of Natural Resources NPDES General Permit No. 2 in accordance with the terms and conditions set forth in the permit.

Owner:
CITY OF AMES - POWER PLANT
JUSTIN MUSCHICK
200 E 5TH ST
AMES IA 50010
(515)239-5191

Contact:
KRIS EVANS
CITY OF AMES
502 CARROLL AVE
AMES IA 50010
(515)239-5173

Permit Coverage Issued To:

ASH POND CLOSURE - CONSTRUCTION
1000 E 13TH ST
in AMES, STORY COUNTY
located at

1/4 Section	Section	Township	Range
NW	1	83	24W
	For additional location data, please refer to	the storm water database.	

Coverage Provided Through: **5/28/2027**
NPDES Permit Discharge Authorization Number: **44472 - 44065**
Discharge Authorization Date: **5/28/2024**
Acres Disturbed: **9.0**

Project Description : CLOSURE OF ASH POND

IOWA DEPARTMENT OF NATURAL RESOURCES
Wastewater Land Application Facility Plan/Operations Permits Cover Page

In accordance with the provisions of Section 455B.173.3 and 455B.174.4, Code of Iowa, and, or Rule 567-65.7(455B), Rule 567-64.3(455B) of the Iowa Administrative Code, the Director of the Department of Natural Resources does hereby issue the following construction and operation permits:

OWNER NAME & ADDRESS
Ames Municipal Electric System
Attn: Mr. Brian Trower, Assistant Director
502 Carroll Avenue
Ames, IA 50010

FACILITY NAME & ADDRESS
Settling Pond-Steam Electric Plant Ash
200 East 5th Street
Ames, IA 50010

Construction Permit
Number: N/A
Date of Issuance**:** N/A

Operation Permit
Number: **8503006**
Date of Issuance**: 02/24/2022**

Site Description: Total Acreage **9.1** Acres
Site Legal Description**:** See attached site map
Sections: 1 & 2 Township: 83N Range: 24W, Story, County:

Facility Design Parameters

Average Hydraulic Loading (AWW): 91,500 gpd

Design Loadings (facility Total)	
Hydraulic (MWW)	91,500 gal/day (Estimated)
Organic	N/A
Nitrogen	N/A
Phosphorous	N/A

Method of Application: **Soil Aquifer Treatment (SAT)**

Authorized Loading Rates

Authorized Loadings	
Hydraulic	N/A
Organic	N/A
Nitrogen	N/A
Phosphorous	N/A

This permit has the following attached documents:
Attachment; Facility Plan Approval **Attachment**
Attachment; Operation Permit **Attachment**

AUTHORIZED BY: Thabit H. Hamoud, P.E.

Revised: May 31, 2022

IOWA DEPARTMENT OF NATURAL RESOURCES
Wastewater Land Application Operation Permit

OPERATION PERMIT NUMBER: 8503006

PERMITTEE:
Ames Municipal Electric System
Attn: Mr. Brian Trower, Assistant Director
502 Carroll Avenue
Ames, IA 50010

IDENTITY AND LOCATION OF FACILITY:
Settling Pond-Steam Electric Plant Ash
200 East 5th Street
Ames, IA 50010

This permit is issued pursuant to the authority of Iowa Code section 455B.174 and rule 567--64.3, Iowa Administrative Code and Iowa Wastewater Facilities Design Standards Chapter 21. The permittee is authorized to operate the wastewater disposal system in accordance with the terms specified in this permit. The permittee may appeal any condition of this permit by filing a written notice of appeal and request for administrative hearing with the director of this department within 30 days of receipt of this permit. Any existing unexpired Iowa operation permit previously issued by the department for this facility's wastewater disposal system is revoked by the issuance of this Iowa Operation Permit. This permit does not authorize any surface water discharge of treated wastewater from the wastewater storage facilities or from wastewater disposal operations.

The permittee is authorized to operate the wastewater disposal system in accordance with the conditions specified below:

I. Prohibitions

1) This is a permit for land application of treated wastewater; it is not a discharge permit. Surface runoff from wastewater land application to waters of the state is prohibited. Direct or indirect discharge to a tile line is also prohibited. Wastewater land application must be confined to the approved disposal areas.

2) The permittee shall report to Iowa DNR any discharge of wastewater, including surface runoff, into a water of the state from disposal operations. Such notification shall be given by telephone call to the appropriate Iowa DNR Field Office within twenty-four (24) hours of the discharge occurrence (see end of this permit for Field Office locations and contact information). In addition, the permittee shall provide to the appropriate Iowa DNR Field Office the following information, in writing, within five (5) days of such discharge.

a) A description of the cause of discharge;
b) The period of discharge, including exact dates and time of discharge;
c) If the discharge has not ceased, notification shall include the anticipated duration of the discharge;
d) The estimated volume of water that was discharged; and
e) The steps being taken to reduce, eliminate, and prevent recurrence of the discharge.

3) Land application of wastewater is prohibited during periods of ground frost or during rainfalls. Ground frost is defined as a temperature reading at or below 32°F on a thermometer in contact with the ground surface.
4) The aerial or leafy shoot portion of the vegetative cover of grasses or forbs, if such are the main cover, shall be harvested at least annually. The use of wastewater for irrigation of vegetables is prohibited. There shall be no direct human consumptive use of the crop in the application area.

5) Land application of wastewater is prohibited when the applicator cannot visually observe land application activities.

6) The maximum hydraulic loading for a surface wastewater application of a slow rate method is 0.5 inch/acre/hr. and 3 inches/acre/wk of an overland flow method. Soil injection method shall not exceed one inch of wastewater per application.

II. Site Criteria

1) Wastewater shall not be land applied:

    a) Within 300 feet of existing dwellings or public use areas. Public use areas do not include roads or highways.
    b) Within 50 feet of the property lines of an application field.
    c) Within 400 feet of any existing potable water supply well not located on the property. Adequate protection shall be provided for wells located on the disposal property.
    d) Within 300 feet of any structure, continuous flowing stream or other physiographic feature that may provide direct connection between the ground water table and the surface.
    e) Within 1000 feet of a shallow public well.
    f) Within 500 feet of a public lake or impoundment.
    g) Within a half mile of a public lake or impoundment used as a source of water by a potable water supply.

2) The actual wetted perimeter, as determined by wind speed and direction and other operating conditions, shall not exceed the boundaries in paragraph (1) of this section.
3) The location of the disposal area shall be posted along roads and public use areas. A minimum of one sign shall be placed on each side of the disposal area. The perimeter distance between any two signs shall not exceed 500 feet. Each sign shall clearly identify the nature of the disposal and advise against trespassing in letters not less than 2 inches high.

4) A golf course applying treated sanitary wastewater shall take all of the following actions:

    a) Clearly state on all scorecards that the treated final effluent is used for irrigation of the golf course and oral contact with golf balls and tees should be avoided.
    b) Post signs that warn against consumption of water at all water hazards.
    c) Color code, label, or tag all piping and sprinklers associated with the distribution or transmission of treated final effluent to clearly warn against the consumptive use of the contents.

d) Restrict the access of the public to any area where spraying is being conducted.
e) Protect any drinking water fountains located on or near the application area from direct or wind-blown reclaimed wastewater spray.

5) The maximum allowable slope of the wetted disposal area is 5%, unless a runoff control plan has been approved by the local Soil Conservation District.

6) The wetted disposal area shall have a soil mantle of at least 15 feet overlaying any rock, limestone or impermeable strata.

7) Any party disposing on an area owned by another party shall provide Iowa DNR with signed copies of documents establishing their legal rights to utilize the area for not less than five years. Such documents shall include provisions for option renewals specifying that at least one year's notice is given to the party utilizing the area for disposal if the owner does not intend to renew the agreement.

III. Pre-application Treatment and Storage

1) The permittee shall obtain, maintain and utilize pretreatment as specified in the facility plan approval and/or construction permit issued by the Department's Wastewater Engineering Section to the facility.
2) Disinfection shall be provided for spray land applications of treated sanitary wastewater. Disinfection must precede actual spraying of the wastewater onto a field area and must not precede storage. If using chlorine for disinfection, the permittee shall provide a minimum contact time of 15 minutes with a minimum residual chlorine level of 0.5 mg/L. A golf course applying treated sanitary wastewater may also hold disinfected effluent in a retention pond with a detention time of at least 20 days prior to disposal. For this purpose, treated sanitary wastewater may be disinfected using any common treatment technology, and either an existing pond or a pond constructed specifically for effluent retention may be used.
3) A minimum of 2 feet of freeboard must be maintained in all wastewater storage devices (lagoons, tanks, etc.).

IV. Land Application Rates

Permittees shall comply with all pollutant loading restrictions and any other requirements specified in the facility plan/engineering report approval letter and/or construction permit issued by the Department's Wastewater Engineering Section. Total nutrient application rates from all sources including wastewater, fertilizer, and manure shall not exceed the crop uptake rate in a crop year.

V. Trace Element Limitations

Heavy metals and other toxic elements from the storage or treatment facility shall not exceed the maximum concentration found in the following table:

Element	Limit (mg/L)
Aluminum	10.00
Arsenic	0.20
Beryllium	0.20
Boron	1.40
Cadmium	0.02
Chromium	0.20
Cobalt	0.10
Copper	0.40
Fluoride	1.80
Iron	10.00
Lead	10.00
Lithium	2.50
Manganese	0.40
Molybdenum	0.02
Nickel	0.40
Selenium	0.04
Vanadium	0.10
Zinc	4.00

VI. Groundwater

1) Groundwater monitoring wells shall be installed, monitored and maintained if such wells are required in the facility plan/engineering report approval letter and/or construction permit issued by Iowa DNR.

2) The down-gradient groundwater resulting from the land application of wastewater after dilution with the affected native ground water shall meet Iowa DNR's standards for drinking water supplies as defined in Iowa Administrative Code 567-41.2(1)"b"; 567-41.3(1)"b"(1); 567 41.5(1)"b"(1); 567-41.6(1)"b"(1); and 567-41.8(1)"b"(1). If the existing concentration of a parameter in the native groundwater exceeds the drinking water standards, there shall not be an increase in the concentration of the parameter due to land application of wastewater.

3) Any significant detrimental change in the groundwater at or near the site may constitute grounds for requiring additional pretreatment and/or abandonment of the disposal site.

4) The permittee shall submit a feasible alternate plan of wastewater treatment and disposal to the regional Iowa DNR Field Office (where the facility of origin is located) if and when the contaminant levels of the groundwater exceed the maximum allowable concentration.

VII. Monitoring

1) The following parameters must be monitored annually from each groundwater monitoring well. Monitoring for the following parameters is not required if no monitoring wells were required by the facility plan/engineering report approval letter and/or construction permit or the applicant has demonstrated to DNR's satisfaction their insignificance in the influent wastewater.

Total organic carbon (TOC)	Total dissolved solids (TDS)	Sodium absorption ratio
Electrical conductivity	Total nitrogen	Ammonia nitrogen
Organic nitrogen	Nitrate nitrogen	Total phosphorus
Chloride	pH	Alkalinity
Hardness	Aluminum	Arsenic
Berylium	Boron	Cadmium
Chromium	Cobalt	Copper
Fluoride	Iron	Lead
Lithium	Manganese	Molybdenum
Nickel	Selenium	Zinc
Coliform bacteria (if sanitary wastewater is applied or discharged to the ground surface		

2) Testing must be conducted by a laboratory certified in accordance with Iowa Administrative Code 567-83. Routine on-site monitoring for pH, flow, and any other parameter that must be analyzed immediately upon sample collection is excluded from this requirement.

3) All parameters for which testing is required must be analyzed using approved methods specified in 40 CFR Part 136.3.

4) The following operational monitoring is required when land application occurs:
    a) Date of application;
    b) Location of application area and acreage used;
    c) Precipitation, snow cover and temperature on the day of application;
    d) Total volume of wastewater land applied each day;
    e) Duration of application each day;
    f) If crop is used, the type of crop grown, harvesting date of crop, and ultimate use of the crop; and
    g) One sample of the wastewater just prior to application for total nitrogen and/or total phosphorus in units of pounds/1000 gallons. This requirement only applies to facilities that have a maximum nitrogen loading rate and/or a maximum phosphorus loading rate in their facility plan/engineering report approval letter or construction permit.

5) The freeboard measurement representing the highest water level observed during the month shall be recorded for each month.

6) Additional parameters may require monitoring if found in significant concentration in the wastewater. Permittees must conduct any additional monitoring required in the facility plan/engineering report approval letter and/or construction permit issued by the Department's Wastewater Engineering Section. The Trace Element Limitations in Section V of this permit apply if the facility plan/engineering report approval letter and/or construction permit require monitoring of the wastewater in the storage or treatment facility (prior to wastewater land application).

VIII. Records

1) The permittee shall maintain records of all information resulting from any monitoring activities required by this permit and from any operational performance monitoring for a minimum of three years. The period of retention shall be considered to be extended during the course of any unresolved litigation or when requested by the Department.

2) Records of monitoring activities and results shall include for all samples: the date, exact place and time of the sampling; the dates the analyses were performed; who performed the analyses; the analytical techniques or methods used; and the results of such analyses.

3) The permittee shall retain for a minimum of three years all paper and electronic records of monitoring activities and results including all original strip chart recordings for continuous monitoring instrumentation and calibration and maintenance records. The period of retention shall be considered to be extended during the course of any unresolved litigation.

4) The permittee must maintain a copy of the facility plan approval letter and/or construction permit issued by Iowa DNR. The facility plan/engineering report approval letter and/or construction permit shall be kept with this operation permit in a location conforming to customary business practices.

IX. Reporting

1) The facility shall submit an annual report by January 15th of each year to the regional Iowa DNR Field Office (see end of this permit for Field Office map) where the facility of origin is located.

2) The annual report shall contain all the required monitoring found in Section VII of this permit. The annual report must also include the application rate for the limiting parameter(s) as specified in the facility plan/engineering report approval letter and/or construction permit.

3) The annual report shall be signed according to IAC 567-63.11.

A.3 – Change Orders

CHANGE PROPOSAL REQUEST NO.: ___1___

Owner:	City of Ames	Owner's Project No.:	N/A
Engineer:	SCS Engineers	Engineer's Project No.:	27219356.02
Contractor:	JB Holland	Contractor's Project No.:	
Project:	Ash Pond Closure Construction		
Contract Name:	Ash Pond Closure Construction		
Date Issued:	7/03/2024		

Attention: The following changes in the contract on this project are proposed:

Description:

1. Per RFI #2, eliminate 24" SDR 17 stormwater pipe and MarMac Coupler, and replace with 24" CPEP.
2. Per RFI #3, eliminate flap gate (stop gate) from flared end section (FES) structure. FES will still be concrete.
3. Per RFI #4, erosion stone is required for rock chutes. Rock chutes are indicated as part of the base bid, erosion stone was labeled exclusively as alternate bid (Bid Item 31). Please provide invoice (quote) for the required stone. Change order shall be for cost of rock. No additional payment shall be made for geotextile or installation.
4. Per IFC Drawing C4.1, add 1-24" 45° CPEP elbow and eliminate 1-10" 45° SDR 17 elbow.
5. Per IFC Drawing C3.2 (profile) and Detail 4/C5.12, add Styrofoam insulation board for contact water forcemain exiting the contact water collection vault.
6. Per IFC Drawing C3.0 and Detail 5/C5.12, add 8-cleanout pipe boots.

Attachments:

See Drawings Issued for Construction.

Prepared by: SCS Engineers

All work shall be in accordance with the terms, stipulations, and conditions of the original Contract Documents. If the work herein provided for is Approved by Change Order, the time of completion will be:

☐ Increased ☐ Decreased ☐ Unchanged

by calendar days.

This change will: ☐ Add ☐ Deduct ☐ No Change

$ _____

By: General Contractor

Date _____

Owner's Engineer Recommendation:

☐ Recommend Acceptance

☐ Do Not Recommend Acceptance

By: Owner's Engineer

Date _____

Owner's Action:

☐ Accepted ☐ Not Accepted

By: Owner

Date _____

CITY OF ames™

CHANGE ORDER NO. 1

CONTRACT / BID NO:	**2024-074**
PURCHASE ORDER NO:	**63153**

July 10, 2024

Project:	**Ash Pond Closure and RDF Ash Pond Reconstruction**

Contractor Name:	**JB Holland Construction Inc.**	**Change Orders Approved to Date:**			
Address:	**2090 State Highway 9**	**1**		**3**	
City, State, & Zip Code:	**Decorah, IA 52101**	**2**		**4**	

The contract is modified as follows upon execution of this Change Order. The changes included in this change order are made in order to carry out the original intent of the contract. The changes included in this change order are to be accomplished in accordance with the terms, stipulations, and conditions of the original contract as though included herein.

ACTION	DESCRIPTION	COST
Deduct	Change from SDR 17 to N12 in 24-inch pipe material	($2,416.41)
Add	Change in 24-inch concrete flared end section	$7,700.00
Add	Erosion stone at rock chutes	$1,621.20
Add	Insulation over forcemain piping	$1,200.00
Add	Additional pipe boots	$7,560.00
Add	Cement for stabilization	$400,000.00
Add	Bond costs	$1,680.00
	TOTAL AMOUNT - CHANGE ORDER #1:	**$417,344.79**

Contract Price:

Original contract price:	$2,606,093.15
Change orders approved to date:	$0.00
Amount of this change order:	$417,344.79
Adjusted contract price including this change order:	**$3,023,437.94**

Recommended:	**Accepted by City of Ames:**	**Accepted for Contractor:**
Donald E. Kom, Director City of Ames Electric Services	John A. Haila, Mayor City of Ames	Signature William F. Holland Printed name & title
Date	Date	7/12/24 Date

CHANGE PROPOSAL REQUEST NO.: ___2___

Owner:	City of Ames	Owner's Project No.:	N/A
Engineer:	SCS Engineers	Engineer's Project No.:	27219356.02
Contractor:	JB Holland	Contractor's Project No.:	
Project:	Ash Pond Closure Construction		
Contract Name:	Ash Pond Closure Construction		
Date Issued:	8/20/2024		

Attention: The following changes in the contract on this project are proposed:

Description:

Additional removal of ash below the berm separating the clearwater pond from the existing ash pond (work area) as well as potential ash below the west access road.

- Provide a cost/cy to remove ash below access roads and place in the closure area. The actual payment will be calculated using CADD survey surfaces taken before and after the work.
- Provide a cost/in place cy for furnishing, placement and compaction of subbase fill to the original road grade (minus road surface). Payment will be based on before/after surveys.
- Provide a cost/sf for furnishing and installing geotextile and road materials. Payment will be based on the plan view area determined by a survey of the road gravel limits.

Attachments:

See attached sketch of area

Prepared by: SCS Engineers

All work shall be in accordance with the terms, stipulations, and conditions of the original Contract Documents. If the work herein provided for is Approved by Change Order, the time of completion will be:

☐ Increased ☐ Decreased ☐ Unchanged

by calendar days.

This change will: ☐ Add ☐ Deduct ☐ No Change

$ _____

By: General Contractor

Date _____

Owner's Engineer Recommendation:

☐ Recommend Acceptance

☐ Do Not Recommend Acceptance

By: Owner's Engineer

Date _____

Owner's Action:

☐ Accepted ☐ Not Accepted

By: Owner

Date _____

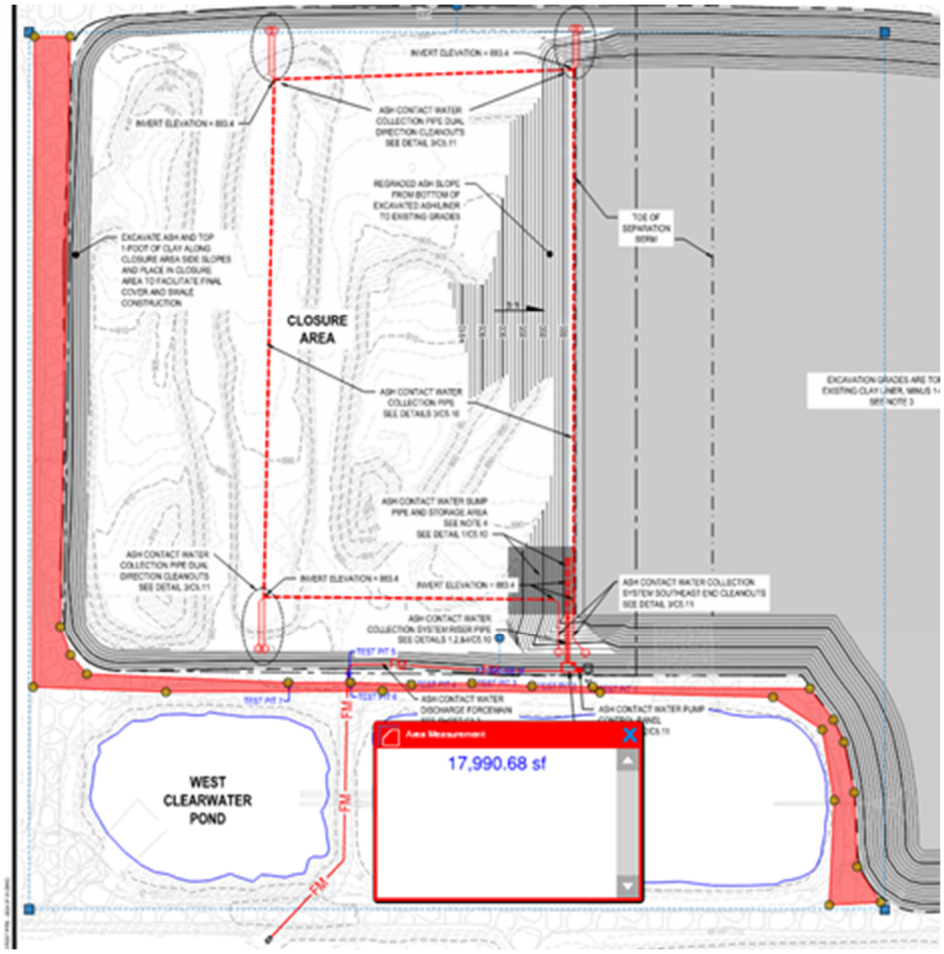

The estimated area is ~18,000 sf at an estimated ave. depth of 2.25’ or ~1,500 in place cy.

Restoration: Restore the road in accordance with the following detail:

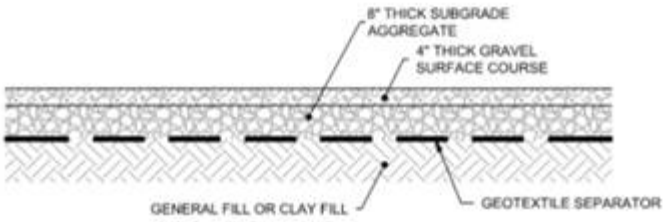

3 ACCESS ROAD
Not to Scale

CITY OF ames™

CHANGE ORDER NO. 2	
CONTRACT / BID NO:	2024-074
PURCHASE ORDER NO:	63153

September 30, 2024

Project:	Ash Pond Closure and RDF Ash Pond Reconstruction

Contractor Name:	JB Holland Construction Inc.	Change Orders Approved to Date:			
Address:	2090 State Highway 9	1	$417,344.79	3	
City, State, & Zip Code:	Decorah, IA 52101	2		4	

The contract is modified as follows upon execution of this Change Order. The changes included in this change order are made in order to carry out the original intent of the contract. The changes included in this change order are to be accomplished in accordance with the terms, stipulations, and conditions of the original contract as though included herein.

ACTION	DESCRIPTION	COST
ADD	Road Area Ash Excavation	$11,775.00
ADD	Subgrade General Fill	$6,630.00
ADD	Road Restoration	$56,000.00
ADD	Ash Pond Restoration General Fill	$33,852.00
ADD	Bond costs	$650.00
	TOTAL AMOUNT - CHANGE ORDER #2:	**$108,907.00**

Contract Price:

Original contract price:	$2,606,093.15
Change orders approved to date:	$417,344.79
Amount of this change order:	$108,907.00
Adjusted contract price including this change order:	**$3,132,344.94**

Recommended:

Donald E. Kom, Director
City of Ames Electric Services

4 Oct 24
Date

Accepted by City of Ames:

John A. Haila, Mayor
City of Ames

10/8/2024
Date

Accepted for Contractor:

Signature

William Holland President
Printed name & title

10/2/24
Date

CHANGE PROPOSAL REQUEST NO.: ___3___

Owner:	City of Ames	Owner's Project No.:	N/A
Engineer:	SCS Engineers	Engineer's Project No.:	27219356.02
Contractor:	JB Holland	Contractor's Project No.:	
Project:	Ash Pond Closure Construction		
Contract Name:	Ash Pond Closure Construction		
Date Issued:	5/12/2025		

Attention: The following changes in the contract on this project are proposed:

Description:

The clay liner of the existing ash pond was located approximately 15-18 feet further west and 12-16 feet further south than anticipated. This resulted in a significant amount of general fill needed. The Contractor will be required to import more soil from an offsite borrow source to complete the project. This change order is for compensation of this additional material from the borrow source.

- • Provide a cost per cubic yard for procurement, hauling, placement, and compaction of cover protective soil or additional general fill. The quantity of cover protective soil will be approximately 1,912 cubic yards. The quantity of general fill will be approximately 500 cubic yards, or as directed by Owner. Payment will be based on before/after surveys.

Attachments:

None

Prepared by: SCS Engineers

All work shall be in accordance with the terms, stipulations, and conditions of the original Contract Documents. If the work herein provided for is Approved by Change Order, the time of completion will be:

☐ Increased ☐ Decreased ☐ Unchanged

by calendar days.

This change will: ☐ Add ☐ Deduct ☐ No Change

$ _____

By: General Contractor

Date _____

Owner's Engineer Recommendation:

☐ Recommend Acceptance

☐ Do Not Recommend Acceptance

By: Owner's Engineer

Date _____

Owner's Action:

☐ Accepted ☐ Not Accepted

By: Owner

Date _____

CITY OF Ames™

CHANGE ORDER NO. 3	
CONTRACT / BID NO:	2024-074
PURCHASE ORDER NO:	63153

May 22, 2025

Project:	Ash Pond Closure and RDF Ash Pond Reconstruction

Contractor Name:	JB Holland Construction Inc.	Change Orders Approved to Date:			
Address:	2090 State Highway 9	1	$417,344.79	3	
City, State, & Zip Code:	Decorah, IA 52101	2	$108,907.00	4	

The contract is modified as follows upon execution of this Change Order. The changes included in this change order are made in order to carry out the original intent of the contract. The changes included in this change order are to be accomplished in accordance with the terms, stipulations, and conditions of the original contract as though included herein.

ACTION	DESCRIPTION	COST
ADD	Road General Fill, Protective Soils & Bond per CPR #3	$45,345.60
	(2,412 cubic yds x $18.80)	
	(Area will be surveyed to verify final quantity)	
	TOTAL AMOUNT - CHANGE ORDER #3:	**$45,345.60**

Contract Price:

Original contract price:	$2,606,093.15
Change orders approved to date:	$526,251.79
Amount of this change order:	$45,345.60
Adjusted contract price including this change order:	**$3,177,690.54**

Recommended:

Donald E. Kom, Director
City of Ames Electric Services

23 May 2025
Date

Accepted by City of Ames:

Brian Phillips, Assistant City Manager
City of Ames

28 May 2025
Date

Accepted for Contractor:

William F. Holland, President

Digitally signed by William F. Holland
DN: C=US, E=bholland@jbhc.biz, O=JB Holland Construction Inc, CN=William F. Holland
Date: 2025.05.23 07:34:19-05'00'

Printed name & title

Date

CHANGE PROPOSAL REQUEST NO.: ___4___

Owner:	City of Ames	Owner's Project No.:	N/A
Engineer:	SCS Engineers	Engineer's Project No.:	27219356.02
Contractor:	JB Holland	Contractor's Project No.:	
Project:	Ash Pond Closure Construction		
Contract Name:	Ash Pond Closure Construction		
Date Issued:	6/10/2025		

Attention: The following changes in the contract on this project are proposed:

Description:

Provide a cost for adding Animal Guards to the 4-inch forcemain outlet, the 10-inch toe drain outlet into the pond, and the 10-inch toe drain outlet into the southeast stormwater area inlet.

Attachments:

None

Prepared by: SCS Engineers

All work shall be in accordance with the terms, stipulations, and conditions of the original Contract Documents. If the work herein provided for is Approved by Change Order, the time of completion will be:

☐ Increased ☐ Decreased ☐ Unchanged

by calendar days.

This change will: ☐ Add ☐ Deduct ☐ No Change

$ _____

By: General Contractor

Date _____

Owner's Engineer Recommendation:

☐ Recommend Acceptance

☐ Do Not Recommend Acceptance

By: Owner's Engineer

Date _____

Owner's Action:

☐ Accepted ☐ Not Accepted

By: Owner

Date _____

CHANGE PROPOSAL REQUEST NO.: ___5___

Owner:	City of Ames	Owner's Project No.:	N/A
Engineer:	SCS Engineers	Engineer's Project No.:	27219356.02
Contractor:	JB Holland	Contractor's Project No.:	
Project:	Ash Pond Closure Construction		
Contract Name:	Ash Pond Closure Construction		
Date Issued:	6/11/2025		

Attention: The following changes in the contract on this project are proposed:

Description:

Provide a lump sum cost in linear feet for installing approximately 360 feet of 4" PVC conduit from the electrical junction box at the northwest corner of the west clearwater pond to the location of the proposed power pole.

Attachments:

None

Prepared by: SCS Engineers

All work shall be in accordance with the terms, stipulations, and conditions of the original Contract Documents. If the work herein provided for is Approved by Change Order, the time of completion will be:

☐ Increased ☐ Decreased ☐ Unchanged

by calendar days.

This change will: ☐ Add ☐ Deduct ☐ No Change

$ _____

By: General Contractor

Date _____

Owner's Engineer Recommendation:

☐ Recommend Acceptance

☐ Do Not Recommend Acceptance

By: Owner's Engineer

Date _____

Owner's Action:

☐ Accepted ☐ Not Accepted

By: Owner

Date _____

CITY OF Ames™

CHANGE ORDER NO. 4

CONTRACT / BID NO:	2024-074
PURCHASE ORDER NO:	63153

June 18, 2025

Project:	Ash Pond Closure and RDF Ash Pond Reconstruction

Contractor Name:	JB Holland Construction Inc.	Change Orders Approved to Date:			
Address:	2191 Hwy 52	1	$417,344.79	3	$45,345.60
City, State, & Zip Code:	Decorah, IA 52101	2	$108,907.00	4	

The contract is modified as follows upon execution of this Change Order. The changes included in this change order are made in order to carry out the original intent of the contract. The changes included in this change order are to be accomplished in accordance with the terms, stipulations, and conditions of the original contract as though included herein.

ACTION	DESCRIPTION	COST
ADD	4" HDPE sdr 13.5 Black conduit w/ red stripe up to 670' in length	$9,502.50
ADD	Animal guards	$170.00
	TOTAL AMOUNT - CHANGE ORDER #4:	**$9,672.50**

Contract Price:

Original contract price:	$2,606,093.15
Change orders approved to date:	$571,597.39
Amount of this change order:	$9,672.50
Adjusted contract price including this change order:	**$3,187,363.04**

Recommended by:

Donald E. Kom Digitally signed by Donald E. Kom Date: 2025.06.27 08:44:01 -05'00'

Donald E. Kom, Director
City of Ames Electric Services

27 June 2025
Date

Accepted by City of Ames:

John A. Haila, Mayor
City of Ames

June 24, 2025
Date

Accepted for Contractor:

William F. Holland Digitally signed by William F. Holland DN: C=US, E=bholland@jbhc.biz, O=JB Holland Construction Inc, CN=William F. Holland Date: 2025.06.18 13:36:07-05'00'

Signature

Printed name & title
6/18/25
Date

CHANGE PROPOSAL REQUEST NO.: ___6___

Owner:	City of Ames	Owner's Project No.:	N/A
Engineer:	SCS Engineers	Engineer's Project No.:	27219356.02
Contractor:	JB Holland	Contractor's Project No.:	
Project:	Ash Pond Closure Construction		
Contract Name:	Ash Pond Closure Construction		
Date Issued:	7/8/2025		

Attention: The following changes in the contract on this project are proposed:

Description:

Provide a unit cost per square yard for temporary seeding, according to the proposed restoration plan; approximately 40,000 square yards.

Attachments:

None

Prepared by: SCS Engineers

All work shall be in accordance with the terms, stipulations, and conditions of the original Contract Documents. If the work herein provided for is Approved by Change Order, the time of completion will be:

☐ Increased ☐ Decreased ☐ Unchanged

by calendar days.

This change will: ☐ Add ☐ Deduct ☐ No Change

$ _____

By: General Contractor

Date _____

Owner's Engineer Recommendation:

☐ Recommend Acceptance

☐ Do Not Recommend Acceptance

By: Owner's Engineer

Date _____

Owner's Action:

☐ Accepted ☐ Not Accepted

By: Owner

Date _____

CHANGE PROPOSAL REQUEST NO.: ___7___

Owner:	City of Ames	Owner's Project No.:	N/A
Engineer:	SCS Engineers	Engineer's Project No.:	27219356.02
Contractor:	JB Holland	Contractor's Project No.:	
Project:	Ash Pond Closure Construction		
Contract Name:	Ash Pond Closure Construction		
Date Issued:	7/8/2025		

Attention: The following changes in the contract on this project are proposed:

Description:

Provide a unit cost per square yard for mulching associated with permanent seeding in the areas described below. Mulch application shall be according to the SUDAS/IDOT standard specifications. Areas to be mulched include the removed onsite stockpile locations, the pond side slopes (except the separation berm), and areas that were cleared and grubbed on the site exterior side slopes; approximately 14,000 square yards.

Attachments:

None

Prepared by: SCS Engineers

All work shall be in accordance with the terms, stipulations, and conditions of the original Contract Documents. If the work herein provided for is Approved by Change Order, the time of completion will be:

☐ Increased ☐ Decreased ☐ Unchanged

by calendar days.

This change will: ☐ Add ☐ Deduct ☐ No Change

$ _____

By: General Contractor

Date _____

Owner's Engineer Recommendation:

☐ Recommend Acceptance

☐ Do Not Recommend Acceptance

By: Owner's Engineer

Date _____

Owner's Action:

☐ Accepted ☐ Not Accepted

By: Owner

Date _____

CITY OF ames™

CHANGE ORDER NO. 5

CONTRACT / BID NO:	2024-074
PURCHASE ORDER NO:	63153

July 15, 2025

Project:	Ash Pond Closure and RDF Ash Pond Reconstruction

Contractor Name:	JB Holland Construction Inc.	Change Orders Approved to Date:			
Address:	2191 Hwy 52	1	$417,344.79	3	$45,345.60
City, State, & Zip Code:	Decorah, IA 52101	2	$108,907.00	4	$9,672.50

The contract is modified as follows upon execution of this Change Order. The changes included in this change order are made in order to carry out the original intent of the contract. The changes included in this change order are to be accomplished in accordance with the terms, stipulations, and conditions of the original contract as though included herein.

ACTION	DESCRIPTION	COST
ADD	14,000 sq. yd. of mulch at $.21/sq. yd. Per RFC 12.	$2,940.00
ADD	40,000 sq. yd. of temp seed and mulch at $.20/ sq. yd. **Actual unit price is $.30/ sq. yd. City will pay 2/3 and JB Holland will pay 1/3. (40,000 sq.yd. @$.3=$12,000) Per RFC 11.	$8,000.00
	TOTAL AMOUNT - CHANGE ORDER #5:	**$10,940.00**

Contract Price:

Original contract price:	$2,606,093.15
Change orders approved to date:	$581,269.89
Amount of this change order:	$10,940.00
Adjusted contract price including this change order:	**$3,198,303.04**

Recommended by:

Donald E. Kom, Director
City of Ames Electric Services

15 Jul 25
Date

Accepted for Contractor:

William F. Holland
Signature

Digitally signed by William F. Holland
DN: C=US, E=bholland@jbhc.biz, O=JB Holland Construction Inc, CN=William F. Holland
Date: 2025.07.15 15:01:55-05'00'

Printed name & title

Date

Appendix B

Photo Documentation

City of Ames
Ash Pond Closure
SCS Engineers Project #27219356.02



Photo 1: Silt fence installed on the east side of the project site

Date: 6/5/24

Direction: South



Photo 2: Excavating ash from the southeast corner of the existing ash pond near the pond outlet.

Date: 6/5/24

Direction: East

City of Ames
Ash Pond Closure
SCS Engineers Project #27219356.02



Photo 3: Excavating the trench for the west run of contact water collection pipe and backfilling with sand.

Date: 6/6/24

Direction: Southeast



Photo 4: Dewatering the southwest corner of the proposed contact water collection system.

Date: 6/10/24

Direction: East

City of Ames
Ash Pond Closure
SCS Engineers Project #27219356.02



Photo 5: Dozer bailing wet ash material from the southeast corner of the existing ash pond. Excavator loading the ash into a haul truck.

Date: 6/10/24

Direction: North



Photo 6: West contact water collection trench with geotextile fabric and drainage aggregate placed in the bottom of the trench.

Date: 6/11/24

Direction: North

City of Ames
Ash Pond Closure
SCS Engineers Project #27219356.02



Photo 7: Fusion welding the cross and cleanout stubs in the northwest corner of the contact water collection system.

Date: 6/13/24

Direction: North



Photo 8: Covering the top of the west contact water collection trench with sand.

Date: 6/13/24

Direction: North

City of Ames
Ash Pond Closure
SCS Engineers Project #27219356.02



Photo 9: Backfilling over the installed section of south contact water collection pipe with drainage aggregate.

Date: 6/14/24

Direction: East



Photo 10: Bridge lift of ash placed over the west contact water collection pipe trench.

Date: 6/17/24

Direction: North

City of Ames
Ash Pond Closure
SCS Engineers Project #27219356.02



Photo 11: Compacting the bridge lift over the west run of contact water collection pipe.

Date: 6/18/24

Direction: North



Photo 12: Excavation of the contact water pumping area.

Date: 6/20/24

Direction: Southwest

City of Ames
Ash Pond Closure
SCS Engineers Project #27219356.02



Photo 13: Closing the geotextile fabric in the southwest corner of the contact water collection system.

Date: 6/21/24

Direction: Southeast



Photo 14: Southwest corner of the contact water collection system covered with 3'-4' thick bridge lift of ash.

Date: 6/21/24

Direction: East

City of Ames
Ash Pond Closure
SCS Engineers Project #27219356.02



Photo 15: Placing the 18" sump/riser pipe into the contact water pumping area.

Date: 6/25/24

Direction: Southeast



Photo 16: Placing geotextile fabric over the drainage aggregate in the contact water pumping area.

Date: 6/26/24

Direction: Northeast

City of Ames
Ash Pond Closure
SCS Engineers Project #27219356.02



Photo 17: Hauling and spreading a lift of wet ash material over the western portion of the contact water collection system.

Date: 6/26/24

Direction: Northeast



Photo 18: Excavating ash from the southeast corner of the existing ash pond.

Date: 6/27/24

Direction: North

City of Ames
Ash Pond Closure
SCS Engineers Project #27219356.02



Photo 19: Pumping water from the temporary sump in the bottom of the separation berm excavation.

Date: 7/1/24

Direction: North



Photo 20: Dozer bailing wet ash material from the bottom of the separation berm excavation.

Date: 7/8/24

Direction: Southeast

City of Ames
Ash Pond Closure
SCS Engineers Project #27219356.02



Photo 21: Identifying the existing clay liner on the south sideslope of the separation berm excavation. The existing clay liner is the dark material that can be seen at the blade of the shovel.

Date: 7/9/24

Direction: West



Photo 22: Cleaning the east edge of the contact water collection trench with shovels, future west edge of separation berm.

Date: 7/12/24

Direction: North

City of Ames
Ash Pond Closure
SCS Engineers Project #27219356.02



Photo 23: Cleaning the bottom of the separation berm excavation with a dozer.

Date: 7/12/24

Direction: South



Photo 24: SCS staff surveying the bottom of excavation in a cleared section below the future separation berm.

Date: 7/15/24

Direction: North

City of Ames
Ash Pond Closure
SCS Engineers Project #27219356.02



Photo 25: Beginning clay placement on the excavation floor.

Date: 7/16/24

Direction: South



Photo 26: Disking ash in the western portion of the Closure Area.

Date: 7/17/24

Direction: Northeast

City of Ames
Ash Pond Closure
SCS Engineers Project #27219356.02



Photo 27: Tractor with a pull-behind sheepsfoot compactor rolling the clay fill on the pond floor.

Date: 7/19/24

Direction: South



Photo 28: Testing clay fill compaction with the nuclear density gauge.

Date: 7/19/24

Direction: South

City of Ames
Ash Pond Closure
SCS Engineers Project #27219356.02



Photo 29: Bailing ash material from the southeast corner of the existing ash pond with a dozer and long-reach excavator.

Date: 7/22/24

Direction: Northwest



Photo 30: Compacting lift of ash around the contact water cleanouts.

Date: 7/23/24

Direction: North

City of Ames
Ash Pond Closure
SCS Engineers Project #27219356.02



Photo 31: Applying cement to the ash in the Closure Area with a site spreader.

Date: 7/25/24

Direction: East



Photo 32: Disking cement into the ash material on the west side of the Closure Area.

Date: 7/25/24

Direction: Northwest

City of Ames
Ash Pond Closure
SCS Engineers Project #27219356.02



Photo 33: Proof rolling the Closure Area.

Date: 8/1/24

Direction: South



Photo 34: First lift of clay fill placed in the southeast section of the separation berm.

Date: 8/6/24

Direction: North

City of Ames
Ash Pond Closure
SCS Engineers Project #27219356.02



Photo 35: Grading the ash in the Closure Area to create a flatter drying surface. Compacting with a self-propelled compactor.

Date: 8/12/24

Direction: North



Photo 36: Dozer grading the eastern sideslope of the separation berm. Compacting the west side of the separation berm.

Date: 8/21/24

Direction: South

City of Ames
Ash Pond Closure
SCS Engineers Project #27219356.02



Photo 37: Semi-Trailer Truck dumping clay fill along the top of the separation berm.

Date: 8/27/24

Direction: West



Photo 38: Compacting the first lift of clay liner on the west slope of the separation berm.

Date: 9/4/24

Direction: South

City of Ames
Ash Pond Closure
SCS Engineers Project #27219356.02



Photo 39: SCS performing a compaction test on the clay liner.

Date: 9/4/24

Direction: East



Photo 40: Pushing a shelby tube to collect an in-place sample of the clay liner.

Date: 9/5/24

Direction: North

City of Ames
Ash Pond Closure
SCS Engineers Project #27219356.02



Photo 41: Shelby tube hole backfilled with bentonite.

Date: 9/5/24



Photo 42: Spraying water on the clay liner in-between placement of lifts.

Date: 9/6/24

Direction: South

City of Ames
Ash Pond Closure
SCS Engineers Project #27219356.02



Photo 43: Clay liner at the end of the day.

Date: 9/6/24

Direction: South



Photo 44: Placing sand along the east contact water collection line.

Date: 9/9/24

Direction: South

City of Ames
Ash Pond Closure
SCS Engineers Project #27219356.02



Photo 45: Placing ash over the east contact water collection trench at the toe of the separation berm.

Date: 9/10/24

Direction: South



Photo 46: Proof rolling the ash placed between the separation berm and the current ash slope in the Closure Area.

Date: 9/12/24

Direction: South

City of Ames
Ash Pond Closure
SCS Engineers Project #27219356.02



Photo 47: Grading and compacting the ash in the Closure Area.

Date: 9/16/24

Direction: North



Photo 48: Cleaning out the existing ash pond outlet.

Date: 9/18/24

Direction: Northwest

City of Ames
Ash Pond Closure
SCS Engineers Project #27219356.02



Photo 49: Dozer cleaning ash from the south pond sideslope.

Date: 10/8/24

Direction: West



Photo 50: Placing general fill on the cleared pond sideslopes to restore 3:1 grades.

Date: 10/10/24

Direction: Northeast

City of Ames
Ash Pond Closure
SCS Engineers Project #27219356.02



Photo 51: Compacting the general fill on the pond sideslope.

Date: 10/10/24

Direction: Northeast



Photo 52: Excavating ash for creation of a containment pit in the Closure Area.

Date: 10/15/24

Direction: East

City of Ames
Ash Pond Closure
SCS Engineers Project #27219356.02



Photo 53: Placing wet ash material in the containment pit in the Closure Area.

Date: 10/15/24

Direction: West



Photo 54: Top of the containment pits in the Closure Area graded to drain over winter.

Date: 10/24/24

Direction: Northwest

City of Ames
Ash Pond Closure
SCS Engineers Project #27219356.02



Photo 55: Excavation progress in the existing ash pond area before the winter shutdown.

Date: 10/24/24

Direction: North



Photo 56: Contractor excavating ash from the northeast corner of the existing ash pond.

Date: 3/31/25

Direction: North

City of Ames
Ash Pond Closure
SCS Engineers Project #27219356.02



Photo 57: Truck traffic over the containment pits that were filled at the end of the 2024 construction season.

Date: 3/31/25

Direction: South



Photo 58: Contractor dumping wet ash material into a containment pit.

Date: 4/8/25

Direction: Northwest

City of Ames
Ash Pond Closure
SCS Engineers Project #27219356.02



Photo 59: Dozer smoothing and shaping the top of the containment pits.

Date: 4/14/25

Direction: Northeast



Photo 60: Excavator pulling back grades on the west side of the Closure Area.

Date: 4/14/25

Direction: Northeast

City of Ames
Ash Pond Closure
SCS Engineers Project #27219356.02



Photo 61: Compacting the west side slope of the Closure Area. Dozer shaping the west side slope.

Date: 4/14/25

Direction: Southeast



Photo 62: Cleaning the pond floor and east sideslope.

Date: 4/16/25

Direction: East

City of Ames
Ash Pond Closure
SCS Engineers Project #27219356.02



Photo 63: Excavating material from the north sideslope of the pond.

Date: 4/17/25

Direction: Northwest



Photo 64: Dozer clearing the south liner sideslope, adjacent to the Closure Area.

Date: 4/22/25

Direction: Southeast

City of Ames
Ash Pond Closure
SCS Engineers Project #27219356.02



Photo 65: Confirmed presence of ash beneath the existing access road west of the Closure Area.

Date: 4/23/25

Direction: West



Photo 66: Excavating ash material from the located existing liner sideslope on the west side of the Closure Area.

Date: 4/24/25

Direction: North

City of Ames
Ash Pond Closure
SCS Engineers Project #27219356.02



Photo 67: Placing the first lift of general fill along the west liner sideslope.

Date: 4/29/25

Direction: North



Photo 68: Compacting a lift of general fill with the self-propelled compactor.

Date: 4/29/25

Direction: North

City of Ames
Ash Pond Closure
SCS Engineers Project #27219356.02



Photo 69: Excavating ash material around the 18" riser pipe and cleanouts near the southeast corner of the Closure Area.

Date: 4/30/25

Direction: Northwest



Photo 70: Compacting the general fill around the 18" riser pipe and cleanouts near the southeast corner of the Closure Area.

Date: 5/2/25

Direction: North

City of Ames
Ash Pond Closure
SCS Engineers Project #27219356.02



Photo 71: Working on the alignment and profile of the 18" riser pipe and cleanouts located near the southeast corner of the Closure Area.

Date: 5/8/25

Direction: South



Photo 72: Grading the east slope of the Closure Area.

Date: 5/8/25

Direction: South

City of Ames
Ash Pond Closure
SCS Engineers Project #27219356.02



Photo 73: Smooth drum rolling the northern slope of the Closure Area.

Date: 5/8/25

Direction: South



Photo 74: Hand-picking the cap for trash and other debris.

Date: 5/12/25

Direction: West

City of Ames
Ash Pond Closure
SCS Engineers Project #27219356.02



Photo 75: Proof rolling the Closure Area cap with a full water truck.

Date: 5/12/25

Direction: Northeast



Photo 76: Placing AquaBlok around the contact water collection cleanouts on the north side of the Closure Area.

Date: 5/14/25

Direction: South

City of Ames
Ash Pond Closure
SCS Engineers Project #27219356.02



Photo 77: Placing the top section of the contact water collection vault.

Date: 5/22/25

Direction: Southeast



Photo 78: 18" riser pipe extended into the vault with the use of an electrofusion coupler. Fusion welding extensions to the cleanout pipes.

Date: 5/23/25

Direction: Southwest

City of Ames
Ash Pond Closure
SCS Engineers Project #27219356.02



Photo 79: Excavating the anchor trench on the north side of the Closure Area.

Date: 5/23/25

Direction: East

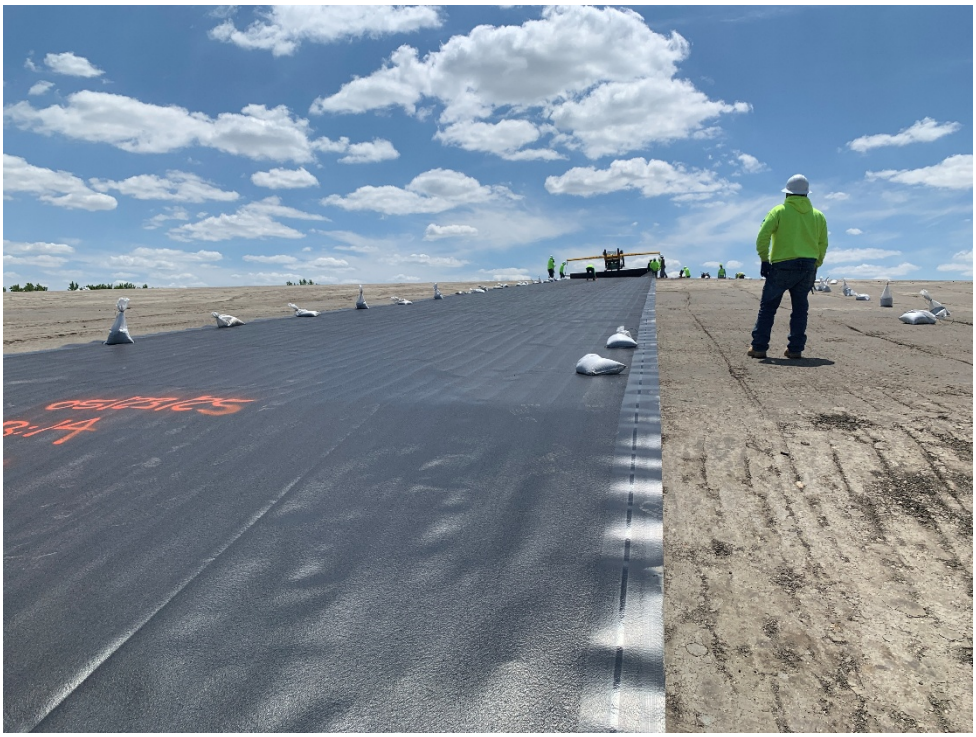

Photo 80: Starting geomembrane placement.

Date: 5/23/25

Direction: South

City of Ames
Ash Pond Closure
SCS Engineers Project #27219356.02



Photo 81: Welding geomembrane seams on the north side of the Closure Area.

Date: 5/23/25

Direction: North



Photo 82: Air testing a seam on the north side of the Closure Area.

Date: 5/23/25

Direction: Southwest

City of Ames
Ash Pond Closure
SCS Engineers Project #27219356.02



Photo 83: Center of the west slope left open to allow equipment access to the top of the Closure Area.

Date: 5/24/25

Direction: East



Photo 84: Extrusion welding a geomembrane repair at a panel junction.

Date: 5/27/25

Direction: North

City of Ames
Ash Pond Closure
SCS Engineers Project #27219356.02



Photo 85: Pulling a destruct for field and laboratory testing.

Date: 5/27/25



Photo 86: Performing destructive seam tests with a field tensiometer.

Date: 5/27/25

Direction: South

City of Ames
Ash Pond Closure
SCS Engineers Project #27219356.02



Photo 87: Installing the inlet and stormwater piping near the southeast corner of the Closure Area.

Date: 5/27/25

Direction: East



Photo 88: Completed pipe boots on a pair of contact water cleanouts.

Date: 5/28/25

Direction: Southeast

City of Ames
Ash Pond Closure
SCS Engineers Project #27219356.02



Photo 89: Vacuum box testing an extrusion weld seam.

Date: 5/28/25

Direction: East



Photo 90: Installation of north stormwater pipe.

Date: 5/28/25

Direction: North

City of Ames
Ash Pond Closure
SCS Engineers Project #27219356.02



Photo 91: Zip-ting the geonet portion of the geocomposite and sewing the geotextile.

Date: 5/29/25

Direction: North



Photo 92: Sewn geotextile seam.

Date: 5/29/25

City of Ames
Ash Pond Closure
SCS Engineers Project #27219356.02



Photo 93: Placing the 4" toe drain piping into the anchor trench.

Date: 5/29/25

Direction: South



Photo 94: Installing the 3" contact water forcemain pipe and green tracer wire

Date: 5/29/25

Direction: West

City of Ames
Ash Pond Closure
SCS Engineers Project #27219356.02



Photo 95: Backfilling and compacting the sand bedding around the contact water forcemain.

Date: 5/30/25

Direction: South



Photo 96: Welding the final panel of geomembrane.

Date: 5/31/25

Direction: East

City of Ames
Ash Pond Closure
SCS Engineers Project #27219356.02



Photo 97: South toe drain outlet into the inlet.

Date: 6/2/25

Direction: South



Photo 98: North toe drain outlet connection.

Date: 6/2/25

Direction: Southeast

City of Ames
Ash Pond Closure
SCS Engineers Project #27219356.02



Photo 99: Excavating for installation of the rock chute at the north stormwater pipe outlet.

Date: 6/5/25

Direction: East



Photo 100: Pushing cover soil up the 4:1 slope on the south side of the Closure Area.

Date: 6/5/25

Direction: East

City of Ames
Ash Pond Closure
SCS Engineers Project #27219356.02



Photo 101: Placing the erosion stone above geotextile for the rock chute at the north stormwater pipe outlet.

Date: 6/5/25

Direction: East



Photo 102: Placing topsoil on the west slope of the Closure Area.

Date: 6/10/25

Direction: North

City of Ames
Ash Pond Closure
SCS Engineers Project #27219356.02



Photo 103: Sump pump and discharge hose installed in the contact water vault.

Date: 6/11/25



Photo 104: Erosion stone and protective aggregate placed at the contact water forcemain outlet.

Date: 6/11/25

Direction: Northeast

City of Ames
Ash Pond Closure
SCS Engineers Project #27219356.02



Photo 105: Threaded end caps welded on the dual contact water cleanouts in the northeast corner of the Closure Area.

Date: 6/12/25

Direction: East



Photo 106: Animal guard installed on the North 10" toe drain outlet pipe.

Date: 6/12/25

Direction: West

City of Ames
Ash Pond Closure
SCS Engineers Project #27219356.02



Photo 107: Placing general fill on the east slope of the pond to restore the 3:1 grades.

Date: 6/17/25

Direction: South



Photo 108: Placing topsoil on the east slope of the separation berm.

Date: 6/19/25

Direction: Northwest

City of Ames
Ash Pond Closure
SCS Engineers Project #27219356.02



Photo 109: Straw wattles placed around the concrete apron at the north perimeter ditch outlet.

Date: 6/23/25

Direction: East



Photo 110: Placing road aggregate over the geotextile on the separation berm.

Date: 6/30/25

Direction: Southeast

City of Ames
Ash Pond Closure
SCS Engineers Project #27219356.02



Photo 111: Compacting the subgrade aggregate for the west access road.

Date: 6/30/25

Direction: North



Photo 112: Pipe supports and metal grating installed in the contact water vault.

Date: 7/1/25

Direction: Northeast

City of Ames
Ash Pond Closure
SCS Engineers Project #27219356.02



Photo 113: Clearing vegetation along the north property boundary.

Date: 7/2/25

Direction: Northeast



Photo 114: Grading the perimeter ditch on the north side of the Closure Area.

Date: 7/2/25

Direction: East

City of Ames
Ash Pond Closure
SCS Engineers Project #27219356.02



Photo 115: Grading the stormwater overflow on the north side of the separation berm.

Date: 7/2/25

Direction: Southeast



Photo 116: City of Ames installing the electrical service for the contact water vault.

Date: 7/23/25

Direction: North

City of Ames
Ash Pond Closure
SCS Engineers Project #27219356.02



Photo 117: Installing filter sock in the perimeter ditch prior to final vegetative restoration.

Date: 7/23/25

Direction: West



Photo 118: Placing road aggregate at the intersection of the south access road and separation berm road.

Date: 8/7/25

Direction: West

City of Ames
Ash Pond Closure
SCS Engineers Project #27219356.02



Photo 119: Tilling the topsoil in the Closure Area to prepare for seeding.

Date: 8/8/25

Direction: West



Photo 120: Applying seed to the Closure Area.

Date: 8/8/25

Direction: South

City of Ames
Ash Pond Closure
SCS Engineers Project #27219356.02



Photo 121: Placing channel erosion mat along the perimeter ditch on the north side of the Closure Area.

Date: 8/8/25

Direction: North



Photo 122: Completed installation of erosion mat in the Closure Area.

Date: 8/14/25

Direction: Southeast

City of Ames
Ash Pond Closure
SCS Engineers Project #27219356.02



Photo 123: Erosion mat installed on the east separation berm slope.

Date: 8/14/25

Direction: South



Photo 124: Straw mulching installed on the pond sideslopes.

Date: 8/14/25

Direction: Southeast

Appendix C

Daily Activities Logs

DAILY FIELD ACTIVITIES REPORT

Client Name:	Ames Municipal Electric System	**Date:**	June 5, 2024
SCS Engineers Project Name:	Ames Ash Pond Closure	**Start Time:**	9:15 AM
SCS Engineers Project No:	27219356.02	**Stop Time:**	1:15 PM
Project Location:	Ames Municipal Electric System Ash Ponds Ames, Iowa		

Task: *Internal Roadways, Ash Excavation*

Weather Information

75-80°, Sunny, Winds from WSW at 15 mph

Contractors, Personnel, and Equipment On Site

Contractors: JB Holland
Personnel: 5
Equipment: 1-John Deere 380G LC Excavator, 1-John Deere 200D LC Excavator, 1-CAT D6N LGP Dozer, 1-MTS 3630T Construction Tractor, John Deere 624K Loader, 1-Bobcat T770 Compact Track Loader, 2-CAT Dump Trucks

Work Areas/Boundaries

Existing Ash Pond

Testing Equipment Used/Observed and Calibration/Re-Calibration Documentation

NA

Tests Completed/Observed

NA

Work Comments/Observations and Test Results

In the morning the contractor finished creating an access road that will be utilized to excavate the west contact water collection pipe trench. The contractor then continued excavating ash in the southeast corner of the existing ash pond near the outlet to the east clearwater pond. The contractor continued to work on establishing the roadway system for equipment traffic within the existing ash pond.

Material(s) Delivered to Site

NA

Construction Observer

Chris Calhoun

SCS ENGINEERS

DAILY FIELD ACTIVITIES REPORT

Client Name:	Ames Municipal Electric System	**Date:**	June 6, 2024
SCS Engineers Project Name:	Ames Ash Pond Closure	**Start Time:**	12:30 PM
SCS Engineers Project No:	27219356.02	**Stop Time:**	6:00 PM
Project Location:	Ames Municipal Electric System Ash Ponds Ames, Iowa		

Task: *West Contact Water Collection Pipe Trench*

Weather Information

76°, Sunny, Winds from WNW at 22 mph

Contractors, Personnel, and Equipment On Site

Contractors: JB Holland
Personnel: 6
Equipment: 1-John Deere 380G LC Excavator, 1-John Deere 200D LC Excavator, 1-CAT D6N LGP Dozer, 1-MTS 3630T Construction Tractor, John Deere 624K Loader, Bobcat T770 Compact Track Loader, 2-CAT Dump Trucks

Work Areas/Boundaries

Existing Ash Pond

Testing Equipment Used/Observed and Calibration/Re-Calibration Documentation

NA

Tests Completed/Observed

NA

Work Comments/Observations and Test Results

The contractor spent the majority of the day excavating the west contact water collection pipe trench. After portions of the trench were excavated, the contractor filled with approximately 2 feet of sand. The excavated ash was either placed on the access road adjacent to the trench or was hauled to the north side of the site. The contractor also started hauling dry ash to the eastern portion of the site to create a roadway platform.

Material(s) Delivered to Site

Sand Bedding

Construction Observer

Chris Calhoun

SCS ENGINEERS

DAILY FIELD ACTIVITIES REPORT

Client Name:	Ames Municipal Electric System	**Date:**	June 10, 2024
SCS Engineers Project Name:	Ames Ash Pond Closure	**Start Time:**	7:30 PM
SCS Engineers Project No:	27219356.02	**Stop Time:**	6:30 PM
Project Location:	Ames Municipal Electric System Ash Ponds Ames, Iowa		

Task: *Ash Excavation, Dewatering, Contact Water Collection Pipe*

Weather Information

76°, Sunny, Winds from NE at 5 mph

Contractors, Personnel, and Equipment On Site

Contractors: JB Holland
Personnel: 7
Equipment: 1-John Deere 380G LC Excavator, 1-John Deere 200D LC Excavator, 1-CAT D6N LGP Dozer, 1-MTS 3630T Construction Tractor, John Deere 624K Loader, Bobcat T770 Compact Track Loader, 2-CAT Dump Trucks, 1-Case IH 9280 Tractor, 1-ROME TAW-20S Wheel Offset Disc Harrow, 1-Bobcat E50 R2 Compact Excavator, 1-John Deere 135G Excavator, 1-Fuel Truck

Work Areas/Boundaries

Existing Ash Pond

Testing Equipment Used/Observed and Calibration/Re-Calibration Documentation

NA

Tests Completed/Observed

NA

Work Comments/Observations and Test Results

The contractor started the morning using a disk harrow to till the ash in the eastern portion of the site. Around the same time, another crew started transporting lengths of pipe over to prepare for welding. Two crew members then started welding pipe lengths together for the west contact water collection pipe. For the remainder of the day there were two main activities performed, dewatering and ash excavation. Dewatering efforts were focused in the west contact water collection pipe trench and the southeast corner of the existing ash pond. Ash excavation was also occuring in the southeast corner of the existing pond. The contractor used a dozer to push the wet ash out from the bottom of this area. The excavated ash was spread out over the previously tilled ash to dry. In the afternoon, a dump truck became stuck just north of where excavation was occuring. The contractor was able to pull the dumptruck out using the other dumptruck onsite as well as two excavators.

Material(s) Delivered to Site

Drainage Aggregate

Construction Observer

Chris Calhoun

SCS ENGINEERS

DAILY FIELD ACTIVITIES REPORT

Client Name:	Ames Municipal Electric System	**Date:**	June 11, 2024
SCS Engineers Project Name:	Ames Ash Pond Closure	**Start Time:**	7:30 AM
SCS Engineers Project No:	27219356.02	**Stop Time:**	7:00 PM
Project Location:	Ames Municipal Electric System Ash Ponds Ames, Iowa		

Task: *Ash Excavation, Dewatering, Contact Water Collection Pipe*

Weather Information

88°, Sunny, Winds from SW at 15-20 mph. 30 min of light rain in the morning.

Contractors, Personnel, and Equipment On Site

Contractors: JB Holland
Personnel: 7
Equipment: 1-John Deere 380G LC Excavator, 1-John Deere 200D LC Excavator, 1-CAT D6N LGP Dozer, 1-MTS 3630T Construction Tractor, John Deere 624K Loader, Bobcat T770 Compact Track Loader, 2-CAT Dump Trucks, 1-Case IH 9280 Tractor, 1-ROME TAW-20S Wheel Offset Disc Harrow, 1-Bobcat E50 R2 Compact Excavator, 1-John Deere 135G Excavator, 1-Fuel Truck, 1-CAT D6T LGP Dozer

Work Areas/Boundaries

Existing Ash Pond

Testing Equipment Used/Observed and Calibration/Re-Calibration Documentation

NA

Tests Completed/Observed

NA

Work Comments/Observations and Test Results

8:00 - The contractor utilized a dozer to spread ash out on the drying surface in the northeast corner of the existing ash pond.
8:30 - The contractor filled in sumps from dewatering activities with sand to prepare for excavation of the contact water pipe trench.
9:30 - Starting in the southwest corner of the site, the contractor used the compact excavator to create an approximately 2'x2' trench in the sand for installation of the west contact water collection pipe. After the trench was created, geotextile fabric was placed in the bottom of the trench and approximately 4" of drainage aggregate was placed on top of the fabric inside the trench.
11:00 - The contractor began discing ash on the north side of the existing ash pond.
11:30 - A portion of the trench holding adjacent to the sand for the contact water collection pipe sloughed approximately 100' north of the southwest corner of the trench. The contractor hauled over soil from one of the general stockpiles on-site in attempt to restabilize this area.
12:00 SCS tied-into the site's survey control system.
1:00 - The contractor spent a majority of the afternoon troubleshooting how to proceed with excavating the contact water collection pipe trench. The crew continued to dewater the trench.
4:30 - The contractor continued excavating ash from the south slope in the southeast corner of the existing ash pond. The ash was hauled to an area just north of the existing concrete pad near the east clearwater pond.
5:45 - The contractor began to lower a section of pipe into the constructed portion of the contact water collection pipe trench.
6:10 - SCS surveyed the top of pipe for the installed pipe section.
6:20 - The contractor began backfilling the pipe trench with drainage aggregate. Crew closed the geotextile fabric over the aggregate and covered the top of the trench with approximately 1' of sand.

Material(s) Delivered to Site

NA

Construction Observer

Chris Calhoun, Brandon Suchomel

SCS ENGINEERS

DAILY FIELD ACTIVITIES REPORT

Client Name:	Ames Municipal Electric System	**Date:**	June 12, 2024
SCS Engineers Project Name:	Ames Ash Pond Closure	**Start Time:**	7:30 AM
SCS Engineers Project No:	27219356.02	**Stop Time:**	7:00 PM
Project Location:	Ames Municipal Electric System Ash Ponds Ames, Iowa		

Task: *Ash Excavation, Dewatering, Contact Water Collection Pipe*

Weather Information

88°, Partly Cloudy, Winds from SW at 20 mph

Contractors, Personnel, and Equipment On Site

Contractors: JB Holland
Personnel: 7
Equipment: 1-John Deere 380G LC Excavator, 1-John Deere 200D LC Excavator, 1-CAT D6N LGP Dozer, 1-MTS 3630T Construction Tractor, John Deere 624K Loader, Bobcat T770 Compact Track Loader, 2-CAT Dump Trucks, 1-Case IH 9280 Tractor, 1-ROME TAW-20S Wheel Offset Disc Harrow, 1-Bobcat E50 R2 Compact Excavator, 1-John Deere 135G Excavator, 1-Fuel Truck, 1-CAT D6T LGP Dozer

Work Areas/Boundaries

Existing Ash Pond

Testing Equipment Used/Observed and Calibration/Re-Calibration Documentation

NA

Tests Completed/Observed

NA

Work Comments/Observations and Test Results

7:30 - The contractor placed additional sand on top of the installed portion of contact water collection pipe.
8:30 - The contractor began using an excavator to cut down the portion of the access road that was located over the proposed south run of contact water collection pipe. Excavated ash from this area was hauled to a central area of the site and spread out with a dozer.
9:30 - The contractor used a disk harrow to till ash in the eastern portion of the existing ash pond.
10:45 - Sand continued to be delivered to the site.
10:45 - Crew began welding pipe for the contact water collection cleanouts.
12:30 - Using an excavator, crew cleaned out the area of the contact water collection trench adjacent to the trench wall sloughing the day prior.
1:30 - The contractor began hauling previously excavated ash from the uppermost bench adjacent to the west contact water collection trench. The ash was hauled to a central area of the site and spread out with a dozer.
2:00 - The contractor used the compact excavator to smooth out the sand in the contact water collection trench.
3:30 - The contractor began positioning equipment to continue installing contact water collection pipe.
4:30 - Using the compact excavator, crew continued to excavate an approximately 2'x2' trench in the sand for the west contact water collection pipe. After the trench was created, geotextile fabric was placed in the bottom of the trench and approximately 4" of drainage aggregate was placed on top of the fabric inside the trench.
6:15 - The contractor began to lower a section of pipe into the contact water collection trench.
6:30 - The crew began welding the new pipe to the previously installed section of pipe.
6:45 - SCS surveyed the top of pipe for the installed pipe section.
6:50 - The contractor began backfilling the pipe trench with drainage aggregate and closed the geotextile fabric.

Material(s) Delivered to Site

Sand

Construction Observer

Chris Calhoun

SCS ENGINEERS

DAILY FIELD ACTIVITIES REPORT

Client Name:	Ames Municipal Electric System	**Date:**	June 13, 2024
SCS Engineers Project Name:	Ames Ash Pond Closure	**Start Time:**	7:30 AM
SCS Engineers Project No:	27219356.02	**Stop Time:**	6:30 PM
Project Location:	Ames Municipal Electric System Ash Ponds Ames, Iowa		

Task: *Contact Water Collection Pipe, Ash Excavation*

Weather Information

88°, Sunny, Winds from N at 15 mph

Contractors, Personnel, and Equipment On Site

Contractors: JB Holland
Personnel: 6
Equipment: 1-John Deere 380G LC Excavator, 1-John Deere 200D LC Excavator, 1-CAT D6N LGP Dozer, 1-MTS 3630T Construction Tractor, John Deere 624K Loader, Bobcat T770 Compact Track Loader, 2-CAT Dump Trucks, 1-Case IH 9280 Tractor, 1-ROME TAW-20S Wheel Offset Disc Harrow, 1-Bobcat E50 R2 Compact Excavator, 1-John Deere 135G Excavator, 1-Fuel Truck, 1-CAT D6T LGP Dozer, 4,000 Gal. Water Truck

Work Areas/Boundaries

Existing Ash Pond

Testing Equipment Used/Observed and Calibration/Re-Calibration Documentation

NA

Tests Completed/Observed

NA

Work Comments/Observations and Test Results

7:00 - The contractor continued trenching and placing geotextile fabric and drainage aggregate for the west contact water collection pipe.
9:00 - The contractor began placing pipe into the trench.
9:15 - The crew began welding the new pipe to the previously installed section of pipe.
9:45 - SCS surveyed the installed pipe sections.
10:00 - The contractor disced ash in the eastern drying areas of the existing ash pond.
10:15 - The contractor began backfilling the contact water collection trench with drainage aggregate.
11:00 - Crew began fusion welding the tee and cleanout stubs in the northwest corner of the closure area.
11:00 - The contractor began closing the geotextile fabric and covering the trench with sand.
1:00 - Crew began using an excavator to move ash on the top of the large mound in the central area of the existing ash pond.
1:45 - Crew began welding the fittings and pipe for the cleanout stubs in the southwest corner of the closure area.
2:00 - Crew began welding the tee and cleanout stubs to the installed portion of contact water collection pipe in the southwest corner of the closure area.
3:15 - The contractor finished with pipe installation for the day. SCS surveyed the installed pipe in the southwest corner of the closure area.
3:45 - A water truck arrived to the site to apply water to the perimeter roads for dust control.
4:00 - The contractor worked on creating the bench adjacent to the proposed south run of contact water collection pipe.
4:00 - Crew continued excavating ash from the slope in the southeast corner of the existing ash pond. Ash was hauled to the northeast corner of the existing ash pond and spread out with a dozer to dry.
5:15 - The contractor utilized a dozer to bail wet ash from the bottom of the existing ash pond in the southeast corner. An excavator was used to excavate out the wet ash. A dumptruck then hauled the ash to the northeast area of the existing ash pond to dry.

Material(s) Delivered to Site

NA

Construction Observer

Chris Calhoun

SCS ENGINEERS

DAILY FIELD ACTIVITIES REPORT

Client Name:	Ames Municipal Electric System	**Date:**	June 14, 2024
SCS Engineers Project Name:	Ames Ash Pond Closure	**Start Time:**	7:30 AM
SCS Engineers Project No:	27219356.02	**Stop Time:**	2:45 PM
Project Location:	Ames Municipal Electric System Ash Ponds Ames, Iowa		

Task: *Contact Water Collection Pipe, Ash Excavation*

Weather Information

88°, Sunny, Winds from NW at 10 mph

Contractors, Personnel, and Equipment On Site

Contractors: JB Holland
Personnel: 8
Equipment: 1-John Deere 380G LC Excavator, 1-John Deere 200D LC Excavator, 1-CAT D6N LGP Dozer, 1-MTS 3630T Construction Tractor, John Deere 624K Loader, Bobcat T770 Compact Track Loader, 2-CAT Dump Trucks, 1-Case IH 9280 Tractor, 1-ROME TAW-20S Wheel Offset Disc Harrow, 1-Bobcat E50 R2 Compact Excavator, 1-John Deere 135G Excavator, 1-Fuel Truck, 1-CAT D6T LGP Dozer, 4,000 Gal. Water Truck

Work Areas/Boundaries

Existing Ash Pond

Testing Equipment Used/Observed and Calibration/Re-Calibration Documentation

NA

Tests Completed/Observed

NA

Work Comments/Observations and Test Results

7:30 - The contractor continued working to create the bench adjacent to the proposed south run of contact water collection pipe.
8:00 - The contractor continued bailing wet ash with a dozer from the southeast corner of the exsiting ash pond. An excavator was used to scoop out the wet ash and a dumptruck hauled the ash to the northeast area of the existing ash pond to dry.
9:45 - Crew began excavating the trench for the south run of contact water collection pipe. Excavated ash was hauled to the drying areas in the eastern portion of the existing ash pond.
10:30 - Crew began placing geotextile fabric and drainage aggregate in the trench.
10:45 - Crew began placing pipe in the trench and welding it to the pipe that had been installed the day prior.
12:45 - The contractor used a dozer to spread out the wet ash in the eastern portion of the existing ash pond.
1:45 - After SCS surveyed the collection pipe, the contractor began backfilling the south contact water collection trench with drainage aggregate.
2:15 - The contractor began closing the geotextile fabric and covering the trench with sand.

Material(s) Delivered to Site

NA

Construction Observer

Chris Calhoun

SCS ENGINEERS

DAILY FIELD ACTIVITIES REPORT

Client Name:	Ames Municipal Electric System	**Date:**	June 17, 2024
SCS Engineers Project Name:	Ames Ash Pond Closure	**Start Time:**	8:00 AM
SCS Engineers Project No:	27219356.02	**Stop Time:**	7:00 PM
Project Location:	Ames Municipal Electric System Ash Ponds Ames, Iowa		

Task: *Ash Excavation, Ash Placement*

Weather Information

91°, Cloudy, Winds from S at 15 mph

Contractors, Personnel, and Equipment On Site

Contractors: JB Holland
Personnel: 8
Equipment: 1-John Deere 380G LC Excavator, 1-John Deere 200D LC Excavator, 1-CAT D6N LGP Dozer, 1-MTS 3630T Construction Tractor, John Deere 624K Loader, Bobcat T770 Compact Track Loader, 2-CAT Dump Trucks, 1-Case IH 9280 Tractor, 1-ROME TAW-20S Wheel Offset Disc Harrow, 1-Bobcat E50 R2 Compact Excavator, 1-John Deere 135G Excavator, 1-Fuel Truck, 1-CAT D6T LGP Dozer, 1-4,000 Gal. Water Truck, 1-CAT CP56B Compactor, 1-SANY SY265C LC Long-Reach Excavator

Work Areas/Boundaries

Existing Ash Pond

Testing Equipment Used/Observed and Calibration/Re-Calibration Documentation

NA

Tests Completed/Observed

NA

Work Comments/Observations and Test Results

8:30 - The contractor disked ash in the eastern drying area, north of the east clearwater pond.
8:30 - The contractor continued excavation of the bench adjacent to the proposed south run of contact water collection pipe. Excavated ash from this activity was hauled near the installed west contact water collection pipe to prepare for placement of the bridge lift.
9:00 - The contractor disked ash along the northern boundary of the existing ash pond.
9:30 - The contractor used a dozer to begin pushing ash over the west contact water collection pipe trench. Ash continued to be spread out over this area throughought the day.
9:30 - Crew applied water to the roadways for dust control.
10:45 - The contractor used an excavator to cut-back the east side of the west contact water collection pipe trench to better facilitate the placement of ash for the bridge lift.
11:00 - The contractor began excavating ash from the mound north of the east clearwater pond. Excavated ash was hauled to the west for use in the bridge lift over the west contract water collection pipe.
1:00 - The contractor utilized a long-reach excavator to begin excavating the trench for the east run of contact water collection pipe. Excavated ash was placed to the east to dry.
2:00 - The contractor began working on the bench for installation of the east run of contact water collection pipe.
2:45 - The contractor began backfilling the excavated trench area with dryer ash material.
3:00 - Crew disked ash in the far eastern portion of the existing ash pond.
5:00 - The contractor used the long-reach excavator to excavate ash from the southeast corner of the existing ash pond. Excavated ash was placed on the sideslope to dry.

Material(s) Delivered to Site

Crane Mats

Construction Observer

Chris Calhoun

SCS ENGINEERS

DAILY FIELD ACTIVITIES REPORT

Client Name:	Ames Municipal Electric System	**Date:**	June 18, 2024
SCS Engineers Project Name:	Ames Ash Pond Closure	**Start Time:**	7:30 AM
SCS Engineers Project No:	27219356.02	**Stop Time:**	7:30 PM
Project Location:	Ames Municipal Electric System Ash Ponds Ames, Iowa		

Task: *Contact Water Collection Pipe, Ash Excavation*

Weather Information

86°, Cloudy, Winds from S at 20 mph

Contractors, Personnel, and Equipment On Site

Contractors: JB Holland
Personnel: 10
Equipment: 1-John Deere 380G LC Excavator, 1-John Deere 200D LC Excavator, 1-CAT D6N LGP Dozer, 1-MTS 3630T Construction Tractor, John Deere 624K Loader, Bobcat T770 Compact Track Loader, 2-CAT Dump Trucks, 1-Case IH 9280 Tractor, 1-ROME TAW-20S Wheel Offset Disc Harrow, 1-Bobcat E50 R2 Compact Excavator, 1-John Deere 135G Excavator, 1-Fuel Truck, 1-CAT D6T LGP Dozer, 1-4,000 Gal. Water Truck, 1-CAT CP56B Compactor, 1-SANY SY265C LC Long-Reach Excavator

Work Areas/Boundaries

Existing Ash Pond

Testing Equipment Used/Observed and Calibration/Re-Calibration Documentation

NA

Tests Completed/Observed

NA

Work Comments/Observations and Test Results

8:00 - The contractor excavated ash from the mound on the west side of the closure area.
8:00 - The contractor continued excavation of the bench adjacent to the proposed east run of contact water collection pipe.
8:30 - The contractor continued excavating wet ash out of the southeast corner of the existing ash pond with a long-reach excavator.
9:30 - The contractor used a dozer to begin pushing ash over the south contact water collection pipe trench. This ash was pushed from the top of the large ash mound in the central part of the closure area.
10:45 - The contractor excavated ash from a soft spot in the bridge lift over the west contact water collection pipe. The excavated area was then backfilled with dryer material.
11:30 - Crew continued trenching for the south run of contact water collection pipe. Geotextile fabric and drainage aggregate were placed in the bottom of the trench..
1:00 - Once pipe had been placed in the trench and welded to the previously installed section of pipe, SCS surveyed the top of pipe elevations.
1:30 - Crew began trenching for the east run of contact water collection pipe. Sand was placed in the trench with a long-reach excavator.
1:30 - Crew began compacting the bridge lift over the west contact water collection pipe.
2:45 - The contractor performed a proof roll on the bridge lift with a loaded dump truck. During the proof roll, the dumptruck's wheels sunk in above the western edge of the pipe trench.
3:30 - Crew began excavating a trench in the sand to install the geotextile fabric and drainage aggregate for the east contact water collection pipe.
4:00 - The contractor continued using a compactor on the bridge lift over the west contact water collection pipe.
4:15 - Crew began backfilling over the installed portion of south contact water collection pipe with drainage aggregate. The geotexile fabric was then closed and covered with sand. The contractor used a dozer to cover the installed portion of pipe with ash.
6:00 - Crew compacted the lift of ash over the south contact water collection pipe.
7:00 - Crew began installing pipe in the east contact water collection trench. Once the pipe was installed, SCS surveyed the top of pipe.
7:15 - The contractor began backfilling the trench with drainage aggregate.

Material(s) Delivered to Site

Sand

Construction Observer

Chris Calhoun

SCS ENGINEERS

DAILY FIELD ACTIVITIES REPORT

Client Name:	Ames Municipal Electric System	**Date:**	June 19, 2024
SCS Engineers Project Name:	Ames Ash Pond Closure	**Start Time:**	10:30 AM
SCS Engineers Project No:	27219356.02	**Stop Time:**	6:45 PM
Project Location:	Ames Municipal Electric System Ash Ponds Ames, Iowa		

Task: *Contact Water Collection Storage Area, Contact Water Collection Pipe*

Weather Information

70°, Cloudy, Some light rain throughout the day, Winds from N at 10 mph

Contractors, Personnel, and Equipment On Site

Contractors: JB Holland
Personnel: 7
Equipment: 1-John Deere 380G LC Excavator, 1-John Deere 200D LC Excavator, 1-CAT D6N LGP Dozer, 1-MTS 3630T Construction Tractor, John Deere 624K Loader, Bobcat T770 Compact Track Loader, 2-CAT Dump Trucks, 1-Case IH 9280 Tractor, 1-ROME TAW-20S Wheel Offset Disc Harrow, 1-Bobcat E50 R2 Compact Excavator, 1-John Deere 135G Excavator, 1-Fuel Truck, 1-CAT D6T LGP Dozer, 1-4,000 Gal. Water Truck, 1-CAT CP56B Compactor, 1-SANY SY265C LC Long-Reach Excavator

Work Areas/Boundaries

Existing Ash Pond

Testing Equipment Used/Observed and Calibration/Re-Calibration Documentation

NA

Tests Completed/Observed

NA

Work Comments/Observations and Test Results

Prior to 10:30 - Contractor removed brush piles from the perimeter of the site. SCS performed office administartion tasks offsite. SCS onsite when contractor began work inside the ash pond.
10:30 - Crew continued trenching for the east run of contact water collection pipe. Geotextile fabric and drainage aggregate were placed in the bottom of the trench. The contractor had pumps running to dewater various areas of the contact water pipe trench.
11:00 - SCS Staff walked the site to observe the impacts from the rain the night before and to document the removal of the vegetation piles from the perimeter of the existing ash pond that occured earlier in the morning.
1:30 - Crew worked on spreading out the ash pile located near the existing concrete pad.
2:00 - The contractor began excavating the contact water collection storage area.
2:00 - The contractor turned on the pump to dewater the southeast corner of the existing ash pond.
6:15 - The contractor began cleaning out the sump hole near the northwest corner of the contact water collection system where the clay liner had been disturbed.

Material(s) Delivered to Site

Sand

Construction Observer

Chris Calhoun

SCS ENGINEERS

DAILY FIELD ACTIVITIES REPORT

Client Name:	Ames Municipal Electric System	**Date:**	June 20, 2024
SCS Engineers Project Name:	Ames Ash Pond Closure	**Start Time:**	7:00 AM
SCS Engineers Project No:	27219356.02	**Stop Time:**	7:00 PM
Project Location:	Ames Municipal Electric System Ash Ponds Ames, Iowa		

Task: *Existing Liner Repair, Contact Water Collection Storage Area*

Weather Information

80°, Partly Cloudy, Winds from SE at 5 mph

Contractors, Personnel, and Equipment On Site

Contractors: JB Holland Personnel: 7
Equipment: 1-John Deere 380G LC Excavator, 1-John Deere 200D LC Excavator, 1-CAT D6N LGP Dozer, 1-MTS 3630T Construction Tractor, John Deere 624K Loader, Bobcat T770 Compact Track Loader, 2-CAT Dump Trucks, 1-Case IH 9280 Tractor, 1-ROME TAW-20S Wheel Offset Disc Harrow, 1-Bobcat E50 R2 Compact Excavator, 1-John Deere 135G Excavator, 1-Fuel Truck, 1-CAT D6T LGP Dozer, 1-4,000 Gal. Water Truck, 1-CAT CP56B Compactor, 1-SANY SY265C LC Long-Reach Excavator, 1-McElroy TracStar 618 Series 2 Fusion Machine

Work Areas/Boundaries

Existing Ash Pond

Testing Equipment Used/Observed and Calibration/Re-Calibration Documentation

NA

Tests Completed/Observed

NA

Work Comments/Observations and Test Results

7:00 - The contractor began placing drainage aggregate in the bottom of the contact water storage area with a long reach excavator.
7:30 - The contractor continued cleaning out the sump hole near the northwest corner of the contact water collection system where the clay liner had been disturbed. Crew pumped out the remaining free water in the sump and started to fill the hole with bentonite. Once placed, SCS surveyed the top of the bentonite to verify the elevation matched the previous top of existing clay liner elevation (883.0'+). Crew then backfilled the hole with dry ash material.
9:00 - The contractor continued excavating the contact water collection storage area.
10:00 - The contractor began dewatering in the eastern area of the existing ash pond.
10:30 - Crew used a dozer to spread the wet ash in the far eastern drying area of the existing ash pond.
11:15 - The contractor began dewatering in an area along the northern perimeter of the existing ash pond.
1:45 - Crew began welding pipe for the east run of contact water collection pipe.
3:00 - The contractor continued placing drainage aggregate in the bottom of the contact water storage area with a long reach excavator.
4:00 - The contractor began placing the portion of the eastern contact water collection pipe that extends into the contact water storage area. Crew began welding the pipe to the previously installed portion of east contact water collection pipe.
4:45 - The contractor began excavating wet sand out of the east contact water collection pipe trench and backfilled with dry sand.
5:15 - Crew continued north with trenching for the east contact water collection pipe. Geotextile fabric and drainage aggregate were placed in the bottom of the trench. Dewatering of the trench was performed as needed.
6:15 - Crew used a dozer to grade the far eastern side slope of the existing ash pond.

Material(s) Delivered to Site

Drainage Aggregate

Construction Observer

Chris Calhoun

SCS ENGINEERS

DAILY FIELD ACTIVITIES REPORT

Client Name:	Ames Municipal Electric System	**Date:**	June 21, 2024
SCS Engineers Project Name:	Ames Ash Pond Closure	**Start Time:**	7:00 AM
SCS Engineers Project No:	27219356.02	**Stop Time:**	5:30 PM
Project Location:	Ames Municipal Electric System Ash Ponds Ames, Iowa		

Task: *Contact Water Collection Pipe, Ash Placement*

Weather Information

88°, Partly Cloudy, Winds from S at 13 mph

Contractors, Personnel, and Equipment On Site

Contractors: JB Holland Personnel: 7
Equipment: 1-John Deere 380G LC Excavator, 1-John Deere 200D LC Excavator, 1-CAT D6N LGP Dozer, 1-MTS 3630T Construction Tractor, John Deere 624K Loader, Bobcat T770 Compact Track Loader, 2-CAT Dump Trucks, 1-Case IH 9280 Tractor, 1-ROME TAW-20S Wheel Offset Disc Harrow, 1-Bobcat E50 R2 Compact Excavator, 1-John Deere 135G Excavator, 1-Fuel Truck, 1-CAT D6T LGP Dozer, 1-4,000 Gal. Water Truck, 1-CAT CP56B Compactor, 1-SANY SY265C LC Long-Reach Excavator, 1-McElroy TracStar 618 Series 2 Fusion Machine

Work Areas/Boundaries

Existing Ash Pond

Testing Equipment Used/Observed and Calibration/Re-Calibration Documentation

NA

Tests Completed/Observed

NA

Work Comments/Observations and Test Results

7:00 - The contractor pumped water from the contact water storage area.
8:00 - Crew began fusion welding the 18" contact water sump and inclined riser pipes.
8:00 - Crew placed the remainder of the south run of contact water collection pipe that extends into the contact water storage area. The pipe was covered with drainage aggregate.
10:00 - The contractor began backfilling the southwest corner of the contact water collection system with drainage aggregate. The geotextile fabric was then closed and covered with sand.
10:30 - Crew continued north with trenching for the east run of contact water collection pipe. Geotextile fabric and drainage aggregate were placed in the bottom of the trench as it progressed.
11:00 - Crew backfilled the installed portion of south contact water collection pipe with drainage aggregate. The geotextile fabric was then closed and covered with sand.
11:30 - The contractor covered the southwest corner of the contact water collection system and the remainder of the south contact water collection pipe trench with a bridge lift of ash.
12:00 - The crew began working the ash on the top of the mound in the central portion of the closure area. Crew began pushing ash down the eastern sideslope of the mound towards the east contact water collection trench.
12:30 - The contractor used a dozer to spread out and smooth the ash surface in the northeast corner of the existing ash pond.
3:15 - Crew compacted the lift of ash over the the southern side of the contact water collection system.
3:45 - Crew began placing pipe into the east contact water collection trench. Once installed, SCS surveyed the top of pipe.
4:30 - The contractor began backfilling over the pipe with drainage aggregate and started closed the geotextile fabric.
5:00 - The contractor began covering the east contact water collection trench with sand.

Material(s) Delivered to Site

NA

Construction Observer

Chris Calhoun

SCS ENGINEERS

DAILY FIELD ACTIVITIES REPORT

Client Name:	Ames Municipal Electric System	**Date:**	June 24, 2024
SCS Engineers Project Name:	Ames Ash Pond Closure	**Start Time:**	8:00 AM
SCS Engineers Project No:	27219356.02	**Stop Time:**	7:00 PM
Project Location:	Ames Municipal Electric System Ash Ponds Ames, Iowa		

Task: *Contact Water Collection Pipe*

Weather Information

94°, Sunny, Winds from S at 17 mph

Contractors, Personnel, and Equipment On Site

Contractors: JB Holland Personnel: 7
Equipment: 1-John Deere 380G LC Excavator, 1-John Deere 200D LC Excavator, 1-CAT D6N LGP Dozer, 1-MTS 3630T Construction Tractor, John Deere 624K Loader, Bobcat T770 Compact Track Loader, 2-CAT Dump Trucks, 1-Case IH 9280 Tractor, 1-ROME TAW-20S Wheel Offset Disc Harrow, 1-Bobcat E50 R2 Compact Excavator, 1-John Deere 135G Excavator, 1-Fuel Truck, 1-CAT D6T LGP Dozer, 1-4,000 Gal. Water Truck, 1-CAT CP56B Compactor, 1-SANY SY265C LC Long-Reach Excavator, 1-McElroy TracStar 618 Series 2 Fusion Machine

Work Areas/Boundaries

Existing Ash Pond

Testing Equipment Used/Observed and Calibration/Re-Calibration Documentation

NA

Tests Completed/Observed

NA

Work Comments/Observations and Test Results

8:00 - The contractor pumped water from the contact water storage area.
9:00 - Crew used a dozer to smooth the drying areas in the east and north portions of the site.
9:30 - The contractor continued trench excavation for the east run of contact water collection pipe. Geotextile fabric and drainage aggregate were placed in the bottom of the trench.
10:30 - Crew began cutting down the portion of the internal access road that was located above the proposed north run of contact water collection pipe. Excavated material was hauled to the south and used to construct a new access point over the installed south contact water collection pipe.
12:15 - The contractor began trench excavation for the north run of contact water collection pipe. Geotextile fabric and drainage aggregate were placed in the bottom of the trench.
2:30 - While trenching for the north run of contact water collection pipe, the contractor encountered clay material at an elevation higher than anticipated. SCS verified that it was clay. The contractor transitioned the bottom of the trench upward to match the top of the clay.
4:30: Crew finished excavation of the trench in the northeast corner of the contact water collection system.
4:45 - The contractor began placing pipe into the north contact water collection trench. Crew welded the pipe to the previously installed stub in the northwest corner of the contact water collection system. Once placed, SCS surveyed the top of pipe.
6:00 - Crew welded the tee section in the northeast corner of the contact water collection system. Crew began placing pipe to connect to the previously installed portion of east contact water collection pipe.
6:45 - Crew welded the pipe to the previously installed portion of east contact water collection pipe. SCS then surveyed the top of the pipe.

Material(s) Delivered to Site

Sand, Drainage Aggregate

Construction Observer

Chris Calhoun

SCS ENGINEERS

DAILY FIELD ACTIVITIES REPORT

Client Name:	Ames Municipal Electric System	**Date:**	June 25, 2024
SCS Engineers Project Name:	Ames Ash Pond Closure	**Start Time:**	7:00 AM
SCS Engineers Project No:	27219356.02	**Stop Time:**	7:00 PM
Project Location:	Ames Municipal Electric System Ash Ponds Ames, Iowa		

Task: *Contact Water Collection System, Ash Placement, Ash Excavation*

Weather Information

91°, Sunny, Winds from NE at 11 mph

Contractors, Personnel, and Equipment On Site

Contractors: JB Holland Personnel: 6
Equipment: 1-John Deere 380G LC Excavator, 1-John Deere 200D LC Excavator, 1-CAT D6N LGP Dozer, 1-MTS 3630T Construction Tractor, John Deere 624K Loader, Bobcat T770 Compact Track Loader, 2-CAT Dump Trucks, 1-Case IH 9280 Tractor, 1-ROME TAW-20S Wheel Offset Disc Harrow, 1-Bobcat E50 R2 Compact Excavator, 1-John Deere 135G Excavator, 1-Fuel Truck, 1-CAT D6T LGP Dozer, 1-4,000 Gal. Water Truck, 1-CAT CP56B Compactor, 1-SANY SY265C LC Long-Reach Excavator, 1-McElroy TracStar 618 Series 2 Fusion Machine

Work Areas/Boundaries

Existing Ash Pond

Testing Equipment Used/Observed and Calibration/Re-Calibration Documentation

NA

Tests Completed/Observed

NA

Work Comments/Observations and Test Results

7:00 - The contractor began backfilling with drainage aggregate over the contact water collection pipe that was installed the day prior. The geotextile fabric was then closed and covered with sand.
8:00 - Crew welded cleanout stubs to the installed contact water collection pipe in the northeast and southeast corners of the collection system.
10:45 - The contractor began excavating to prepare for installation of the 18" sideslope riser pipe. Crew placed approximately 6" of sand in the bottom of the trench.
10:45 - Crew began hauling previously excavated material from the construction of the contact water storage area to the northeast drying area. The ash was then spread out with a dozer.
12:45 - The contractor placed the welded 18" sump/riser pipe into the contact water storage area. SCS surveyed the top of pipe.
2:15 - Crew excavated ash from the southeast corner of the existing ash pond.
3:30 - The contractor began placing an additional lift of dry ash material over the bridge lift above the western portion of the contact water collection system.
4:15 - Crew began covering the 18" sump pipe with drainage aggregate.
4:30 - The contractor hauled the remaining stockpiled ash, located near the existing concrete pad, to the far northeast corner of the existing ash pond.
6:15 - Crew continued placing drainage aggregate in the contact water storage area.

Material(s) Delivered to Site

NA

Construction Observer

Chris Calhoun

SCS ENGINEERS

DAILY FIELD ACTIVITIES REPORT

Client Name:	Ames Municipal Electric System	**Date:**	June 26, 2024
SCS Engineers Project Name:	Ames Ash Pond Closure	**Start Time:**	7:00 AM
SCS Engineers Project No:	27219356.02	**Stop Time:**	7:00 PM
Project Location:	Ames Municipal Electric System Ash Ponds Ames, Iowa		

Task: *Separation Berm Excavation, Ash Placement, Contact Water Storage Area*

Weather Information

86°, Sunny, Winds from N at 15 mph

Contractors, Personnel, and Equipment On Site

Contractors: JB Holland Personnel: 7
Equipment: 2-John Deere 380G LC Excavators, 1-CAT D6N LGP Dozer, 1-MTS 3630T Construction Tractor, John Deere 624K Loader, Bobcat T770 Compact Track Loader, 2-CAT Dump Trucks, 1-Case IH 9280 Tractor, 1-ROME TAW-20S Wheel Offset Disc Harrow, 1-Bobcat E50 R2 Compact Excavator, 1-Fuel Truck, 1-CAT D6T LGP Dozer, 1-4,000 Gal. Water Truck, 1-CAT CP56B Compactor, 1-SANY SY265C LC Long-Reach Excavator

Work Areas/Boundaries

Existing Ash Pond

Testing Equipment Used/Observed and Calibration/Re-Calibration Documentation

NA

Tests Completed/Observed

NA

Work Comments/Observations and Test Results

7:00 - The contractor continued placing drainage aggregate in the contact water storage area.
7:30 - The contractor began excavating material from the proposed location of the separation berm. Excavated material was placed in the far northeast corner of the existing ash pond.
10:00 - The contractor continued placing a lift of dry ash material over the wetsern portion of the contact water collection system.
12:00 - The contractor began placing the bridge lift of ash over the north contact water collection trench.
12:30 - Water was applied to the roadways for dust control. This occured several more times throughout the day.
12:30 - Crew used a skidloader to spread drainage aggregate in the contact water storage area.
3:00 - The contractor continued excavation for the separation berm.
3:30 - The contractor began placing a lift of wet ash over the west and north lifts of dry ash placed earlier in the day.
5:30 - Crew began placing geotextile fabric over the drainage aggregate in the contact water storage area.

Material(s) Delivered to Site

Drainage Aggregate

Construction Observer

Chris Calhoun

SCS ENGINEERS

DAILY FIELD ACTIVITIES REPORT

Client Name:	Ames Municipal Electric System	**Date:**	June 27, 2024
SCS Engineers Project Name:	Ames Ash Pond Closure	**Start Time:**	7:00 AM
SCS Engineers Project No:	27219356.02	**Stop Time:**	7:00 PM
Project Location:	Ames Municipal Electric System Ash Ponds Ames, Iowa		

Task: *Separation Berm Excavation, General Ash Excavation*

Weather Information

79°, Partly Cloudy, Winds from S at 10 mph

Contractors, Personnel, and Equipment On Site

Contractors: JB Holland Personnel: 7
Equipment: 2-John Deere 380G LC Excavators, 1-CAT D6N LGP Dozer, 1-MTS 3630T Construction Tractor, John Deere 624K Loader, Bobcat T770 Compact Track Loader, 2-CAT Dump Trucks, 1-Case IH 9280 Tractor, 1-ROME TAW-20S Wheel Offset Disc Harrow, 1-Bobcat E50 R2 Compact Excavator, 1-Fuel Truck, 1-CAT D6T LGP Dozer, 1-4,000 Gal. Water Truck, 1-CAT CP56B Compactor, 1-SANY SY265C LC Long-Reach Excavator

Work Areas/Boundaries

Existing Ash Pond

Testing Equipment Used/Observed and Calibration/Re-Calibration Documentation

NA

Tests Completed/Observed

NA

Work Comments/Observations and Test Results

7:00 - The contractor continued excavation for the separation berm. Excavated material was placed in the drying area to the east.
8:15 - Crew finished placing geotextile fabric in the contact water storage area.
10:00 - Crew graded the existing ash mound in the central part of the closure area.
10:45 - The contractor used a long-reach excavator to excavate ash material from the southeast corner of the existing ash pond.
2:30 - The contractor began constructing a berm, consisting of dry ash, along the perimeter of the wet ash material excavated from the separation berm area. They have dubbed this containment area, "the toilet bowl".

Material(s) Delivered to Site

NA

Construction Observer

Chris Calhoun

SCS ENGINEERS

DAILY FIELD ACTIVITIES REPORT

Client Name:	Ames Municipal Electric System	**Date:**	July 1, 2024
SCS Engineers Project Name:	Ames Ash Pond Closure	**Start Time:**	7:30 AM
SCS Engineers Project No:	27219356.02	**Stop Time:**	7:00 PM
Project Location:	Ames Municipal Electric System Ash Ponds Ames, Iowa		

Task: *Separation Berm Excavation, Dewatering*

Weather Information

66°, Cloudy, Winds from SE at 13 mph

Contractors, Personnel, and Equipment On Site

Contractors: JB Holland Personnel: 5
Equipment: 2-John Deere 380G LC Excavators, 1-CAT D6N LGP Dozer, 1-MTS 3630T Construction Tractor, John Deere 624K Loader, Bobcat T770 Compact Track Loader, 2-CAT Dump Trucks, 1-Case IH 9280 Tractor, 1-ROME TAW-20S Wheel Offset Disc Harrow, 1-Bobcat E50 R2 Compact Excavator, 1-Fuel Truck, 1-CAT D6T LGP Dozer, 1-4,000 Gal. Water Truck, 1-CAT CP56B Compactor, 1-SANY SY265C LC Long-Reach Excavator

Work Areas/Boundaries

Existing Ash Pond, Borrow Source

Testing Equipment Used/Observed and Calibration/Re-Calibration Documentation

NA

Tests Completed/Observed

NA

Work Comments/Observations and Test Results

7:30 - The contractor started to dewater the southeast corner of the existing ash pond.
8:30 - The contractor continued excavation for the separation berm. Excavated material was placed in the drying area to the east.
8:30 - Crew used a dozer to smooth out the drying areas on the east and west sides of the site.
12:00 - The contractor worked to create a sump to pump water from in the bottom of the separation berm excavation.
1:45 - The contractor and SCS met a representative from Team Services at the clay borrow source to collect soil samples for testing.
2:45 - Excavation and spreading ash around the site for drying continued.

Material(s) Delivered to Site

NA

Construction Observer

Chris Calhoun

SCS ENGINEERS

DAILY FIELD ACTIVITIES REPORT

Client Name:	Ames Municipal Electric System	**Date:**	July 8, 2024
SCS Engineers Project Name:	Ames Ash Pond Closure	**Start Time:**	8:00 AM
SCS Engineers Project No:	27219356.02	**Stop Time:**	6:00 PM
Project Location:	Ames Municipal Electric System Ash Ponds Ames, Iowa		

Task: *Separation Berm Excavation, Ash Placement, Dewatering*

Weather Information

83°, Sunny, Winds from W at 6 mph

Contractors, Personnel, and Equipment On Site

Contractors: JB Holland Personnel: 4
Equipment: 2-John Deere 380G LC Excavators, 1-CAT D6N LGP Dozer, 1-MTS 3630T Construction Tractor, John Deere 624K Loader, Bobcat T770 Compact Track Loader, 2-CAT Dump Trucks, 1-Case IH 9280 Tractor, 1-ROME TAW-20S Wheel Offset Disc Harrow, 1-Bobcat E50 R2 Compact Excavator, 1-Fuel Truck, 1-CAT D6T LGP Dozer, 1-4,000 Gal. Water Truck, 1-CAT CP56B Compactor, 1-SANY SY265C LC Long-Reach Excavator

Work Areas/Boundaries

Existing Ash Pond

Testing Equipment Used/Observed and Calibration/Re-Calibration Documentation

NA

Tests Completed/Observed

NA

Work Comments/Observations and Test Results

8:00 - The contractor turned on the pumps to dewater the southeast corner of the existing ash pond and the bottom of the separation berm excavation.
8:15 - The contractor continued excavation for the separation berm. The dryer excavated material from approximately the top 4' was hauled to the northeast corner of the closure area and spread out with a dozer. The wetter material from the lower elevations of the excavation was hauled directly to the east and placed in the "bowl" on the west side of the main drying area.
12:00 - Excavators were used to distribute the wet ash material in the "bowl".
1:15 - Crew used a dozer to work the upper lift of ash above the west portion of the contact water collection system.
4:30 - The contractor used a dozer to bail wet ash from the bottom of the separation berm excavation.

Material(s) Delivered to Site

NA

Construction Observer

Chris Calhoun

SCS ENGINEERS

DAILY FIELD ACTIVITIES REPORT

Client Name:	Ames Municipal Electric System	**Date:**	July 9, 2024
SCS Engineers Project Name:	Ames Ash Pond Closure	**Start Time:**	8:00 AM
SCS Engineers Project No:	27219356.02	**Stop Time:**	6:00 PM
Project Location:	Ames Municipal Electric System Ash Ponds Ames, Iowa		

Task: *Separation Berm Excavation, Ash Placement*

Weather Information

84°, Partly Cloudy, Winds from N at 8 mph

Contractors, Personnel, and Equipment On Site

Contractors: JB Holland Personnel: 6
Equipment: 2-John Deere 380G LC Excavators, 1-CAT D6N LGP Dozer, 1-MTS 3630T Construction Tractor, John Deere 624K Loader, Bobcat T770 Compact Track Loader, 2-CAT Dump Trucks, 1-Case IH 9280 Tractor, 1-ROME TAW-20S Wheel Offset Disc Harrow, 1-Bobcat E50 R2 Compact Excavator, 1-Fuel Truck, 1-CAT D6T LGP Dozer, 1-4,000 Gal. Water Truck, 1-CAT CP56B Compactor, 1-SANY SY265C LC Long-Reach Excavator

Work Areas/Boundaries

Existing Ash Pond

Testing Equipment Used/Observed and Calibration/Re-Calibration Documentation

NA

Tests Completed/Observed

NA

Work Comments/Observations and Test Results

8:00 - The contractor continued excavation for the separation berm. Dryer excavated material from approximately the upper 4' was hauled to the closure area to be spread out with a dozer.
9:45 - SCS staff (Calhoun, Suchomel, and Kuhlenengel) worked to identify the existing clay liner on the south sideslope of the separation berm excavation.
10:45 - Crew used a dozer to work the ash above the west portion of the contact water collection system.
11:00 - The contractor worked on creating another "bowl" for piling wet ash material in the northeast corner of the existing ash pond. Crew created a berm with dryer ash material to form the perimeter of the "bowl". Once the perimeter was created, wet ash started being placed within the "bowl".
11:30 - The contractor disked ash in the drying area on the east side of the existing ash pond.
12:30 - The contractor placed a lift of wet ash in the drying area on the east side of the existing ash pond.
1:30 - The contractor used a dozer to bail wet ash from the bottom of the separation berm excavation.
1:45 - The contractor rolled the compactor over the ash above the south contact water collection trench.
2:00 - Excavation for the separation berm continued.

Material(s) Delivered to Site

NA

Construction Observer

Chris Calhoun

SCS ENGINEERS

DAILY FIELD ACTIVITIES REPORT

Client Name:	Ames Municipal Electric System	**Date:**	July 10, 2024
SCS Engineers Project Name:	Ames Ash Pond Closure	**Start Time:**	8:00 AM
SCS Engineers Project No:	27219356.02	**Stop Time:**	6:00 PM
Project Location:	Ames Municipal Electric System Ash Ponds Ames, Iowa		

Task: *Separation Berm Excavation, Ash Placement*

Weather Information

80°, Cloudy with some light rain in the morning, Winds from N at 10 mph

Contractors, Personnel, and Equipment On Site

Contractors: JB Holland Personnel: 6
Equipment: 2-John Deere 380G LC Excavators, 1-CAT D6N LGP Dozer, 1-MTS 3630T Construction Tractor, John Deere 624K Loader, Bobcat T770 Compact Track Loader, 2-CAT Dump Trucks, 1-Case IH 9280 Tractor, 1-ROME TAW-20S Wheel Offset Disc Harrow, 1-Bobcat E50 R2 Compact Excavator, 1-Fuel Truck, 1-CAT D6T LGP Dozer, 1-4,000 Gal. Water Truck, 1-CAT CP56B Compactor, 1-SANY SY265C LC Long-Reach Excavator

Work Areas/Boundaries

Existing Ash Pond

Testing Equipment Used/Observed and Calibration/Re-Calibration Documentation

NA

Tests Completed/Observed

NA

Work Comments/Observations and Test Results

8:00 - The contractor used an excavator to pile dry ash material in the low area on the west side of the closure area. This material was excavated from the ash mound in the central portion of the closure area.
8:00 - The contractor continued excavation for the separation berm. The dryer excavated material was hauled to the far east side of the existing ash pond to form the perimeter berm for another "bowl".
8:45 - Crew used a dozer to spread out the dry ash material in the western portion of the closure area.
10:30 - The contractor used an excavator to place dry ash material in the low area above the north contact water collection pipe trench. The ash was spread out with a dozer.
11:30 - The contractor began dumping excavated ash material in the newly created "bowl" on the east side of the existing ash pond.
12:00 - The contractor rolled the compactor over the dry ash in the west and north portions of the closure area.
2:30 - The contractor used a dozer to turn over the ash in the closure area.
4:30 - The contractor began placing another lift of excavated ash on the west and north sides of the closure area.

Material(s) Delivered to Site

NA

Construction Observer

Chris Calhoun

SCS ENGINEERS

DAILY FIELD ACTIVITIES REPORT

Client Name:	Ames Municipal Electric System	**Date:**	July 11, 2024
SCS Engineers Project Name:	Ames Ash Pond Closure	**Start Time:**	8:00 AM
SCS Engineers Project No:	27219356.02	**Stop Time:**	6:00 PM
Project Location:	Ames Municipal Electric System Ash Ponds Ames, Iowa		

Task: *Contact Water Storage Area, Separation Berm Excavation, Ash Placement*

Weather Information

83°, Sunny, Winds from E at 8 mph

Contractors, Personnel, and Equipment On Site

Contractors: JB Holland Personnel: 6
Equipment: 2-John Deere 380G LC Excavators, 1-CAT D6N LGP Dozer, 1-MTS 3630T Construction Tractor, John Deere 624K Loader, Bobcat T770 Compact Track Loader, 2-CAT Dump Trucks, 1-Case IH 9280 Tractor, 1-ROME TAW-20S Wheel Offset Disc Harrow, 1-Bobcat E50 R2 Compact Excavator, 1-Fuel Truck, 1-CAT D6T LGP Dozer, 1-4,000 Gal. Water Truck, 1-CAT CP56B Compactor, 1-SANY SY265C LC Long-Reach Excavator

Work Areas/Boundaries

Existing Ash Pond

Testing Equipment Used/Observed and Calibration/Re-Calibration Documentation

NA

Tests Completed/Observed

NA

Work Comments/Observations and Test Results

8:00 - The contractor continued excavation for the separation berm. A portion of the dryer excavated material was hauled to the closure area to be spread out with a dozer. The remainder of the excavated material was dumped in the "bowl" on the far east side of the existing ash pond.
11:00 - Crew began backfilling the contact water storage area with dry ash material so that equipment could access the eastern edge of the area. The dry ash material was taken from the ash mound in the central portion of the closure area.
11:30 - The contractor used an excavator to remove the ash that abutted the eastern edge of the contact water storage area.
12:30 - Crew used a skidloader to clear off the concrete pad north of the east clearwater pond.
1:00 - The contractor began removing drainage aggregate from the portion of the contact water storage area that was in conflict with the western edge of the separation berm footprint. Some of the excavated rock was placed around the cleanout stubs. The remainder was placed over the geotextile fabric covering the storage area.
2:30 - The contractor used a dozer to turn over the ash in the closure area.
3:30 - The contractor began excavating ash along the eastern edge of the east contact water collection trench until the geotextile fabric was exposed. The excavation was performed primarily with a John Deere 380G Excavator and then fine-tuned with shovels.

Material(s) Delivered to Site

NA

Construction Observer

Chris Calhoun

SCS ENGINEERS

DAILY FIELD ACTIVITIES REPORT

Client Name:	Ames Municipal Electric System	**Date:**	July 12, 2024
SCS Engineers Project Name:	Ames Ash Pond Closure	**Start Time:**	8:00 AM
SCS Engineers Project No:	27219356.02	**Stop Time:**	11:30 PM
Project Location:	Ames Municipal Electric System Ash Ponds Ames, Iowa		

Task: *Separation Berm Excavation, Concrete Pad Removal*

Weather Information

85°, Sunny, Winds from SE at 15 mph

Contractors, Personnel, and Equipment On Site

Contractors: JB Holland Personnel: 6
Equipment: 2-John Deere 380G LC Excavators, 1-CAT D6N LGP Dozer, 1-MTS 3630T Construction Tractor, John Deere 624K Loader, Bobcat T770 Compact Track Loader, 2-CAT Dump Trucks, 1-Case IH 9280 Tractor, 1-ROME TAW-20S Wheel Offset Disc Harrow, 1-Bobcat E50 R2 Compact Excavator, 1-Fuel Truck, 1-CAT D6T LGP Dozer, 1-4,000 Gal. Water Truck, 1-CAT CP56B Compactor, 1-SANY SY265C LC Long-Reach Excavator, 1-Hurricane HD3700 Drop Hammer

Work Areas/Boundaries

Existing Ash Pond

Testing Equipment Used/Observed and Calibration/Re-Calibration Documentation

NA

Tests Completed/Observed

NA

Work Comments/Observations and Test Results

8:00 - Crew continued cleaning the excavation adjacent to the east contact water trench with shovels.
8:30 - The contractor used a dozer to clean the bottom of the separation berm excavation.
8:30 - The contractor utilized a dozer to turn over the ash in the closure area.
8:45 - The contractor used a skidloader equipped with a drop hammer to start breaking up the concrete pad north of the east clearwater pond .
10:45 - The contractor used an excavator to remove a portion of the concrete pad.
11:15 - The contractor turned on the pump to dewater from the bottom of the separation berm excavation.

Material(s) Delivered to Site

NA

Construction Observer

Chris Calhoun

SCS ENGINEERS

DAILY FIELD ACTIVITIES REPORT

Client Name:	Ames Municipal Electric System	**Date:**	July 15, 2024
SCS Engineers Project Name:	Ames Ash Pond Closure	**Start Time:**	8:00 AM
SCS Engineers Project No:	27219356.02	**Stop Time:**	5:00 PM
Project Location:	Ames Municipal Electric System Ash Ponds Ames, Iowa		

Task: *Cleaned Excavation Clearing, Ash Conditioning, Proof Roll*

Weather Information

92°, Sunny in the morning with storms moving in at the end of the day, Winds from S at 6 mph

Contractors, Personnel, and Equipment On Site

Contractors: JB Holland Personnel: 6
Equipment: 1-John Deere 380G LC Excavator, 1-CAT D6N LGP Dozer, 1-MTS 3630T Construction Tractor, John Deere 624K Loader, Bobcat T770 Compact Track Loader, 2-CAT Dump Trucks, 1-Case IH 9280 Tractor, 1-ROME TAW-20S Wheel Offset Disc Harrow, 1-Bobcat E50 R2 Compact Excavator, 1-Fuel Truck, 1-CAT D6T LGP Dozer, 1-Water Truck, 1-CAT CP56B Compactor, 1-SANY SY265C LC Long-Reach Excavator, 1-Hurricane HD3700 Drop Hammer

Work Areas/Boundaries

Existing Ash Pond

Testing Equipment Used/Observed and Calibration/Re-Calibration Documentation

NA

Tests Completed/Observed

NA

Work Comments/Observations and Test Results

8:30 - The contractor disked the ash in the drying area on the east side of the existing ash pond.
8:30 - Crew used the dozer to clean the floor of the separation berm excavation. After cleaning the floor, the dozer operator began cleaning the north sideslope.
8:45 - The contractor turned on the pump to dewater the bottom of the separation berm excavation.
9:00 - SCS inspected the pad lengths on the CAT-CP56B compactor on site; the pad lengths were ~5" in length. Discussion with contractor on clay lift thickness and pad length per project specifications was had.
10:00 - SCS walked a section of the excavation floor with the contractor to evaluate whether it could be determined as clean. A section was cleared as clean.
10:30 - The contractor excavated test holes in the north sideslope to see how much depth remained to reach 'clean' material.
10:45 - Crew rolled the compactor in the west side of the closure area.
11:15 - The contractor performed a proof roll with a loaded dump truck in the closure area. The upper level of the closure area passed the proof roll. Several areas on the lowest level, primarily the west 15'-20' of this area, failed the proof roll with ruts exceeding 6" in depth.
12:30 - The contractor encountered sand while cleaning the north sideslope, appeared to have excavated through the existing clay liner in this location. Discussion with contractor about excavating to clean not necessarily design excavation was had.
12:45 - SCS staff surveyed the bottom of excavation elevations for the cleared section.
1:00 - The contractor began placing a lift of wet ash material on the upper level of the closure area that passed the proof roll.
1:45 - SCS staff identified the location of the design western toe of the proposed separation berm.
3:15 - Crew used a skidloader to clear off the perimeter access roads.
3:30 - The dozer operator leveled out the low area on the west side of the closure area that was proof rolled earlier in the day.
4:45 - Heavy rain and wind moved into the area and the contractor began to end work for the day.

Material(s) Delivered to Site

NA

Construction Observer

Chris Calhoun, Brandon Suchomel

SCS ENGINEERS

DAILY FIELD ACTIVITIES REPORT

Client Name:	Ames Municipal Electric System	**Date:**	July 16, 2024
SCS Engineers Project Name:	Ames Ash Pond Closure	**Start Time:**	7:00 AM
SCS Engineers Project No:	27219356.02	**Stop Time:**	7:00 PM
Project Location:	Ames Municipal Electric System Ash Ponds Ames, Iowa		

Task: *Ash Placement, Ash Excavation, Clay Import, NDG Calibration*

Weather Information

80°, Cloudy, Winds from N at 10 mph

Contractors, Personnel, and Equipment On Site

Contractors: JB Holland Personnel: 6
Equipment: 1-John Deere 380G LC Excavator, 1-CAT D6N LGP Dozer, 1-MTS 3630T Construction Tractor, John Deere 624K Loader, Bobcat T770 Compact Track Loader, 2-CAT Dump Trucks, 1-Case IH 9280 Tractor, 1-ROME TAW-20S Wheel Offset Disc Harrow, 1-Bobcat E50 R2 Compact Excavator, 1-Fuel Truck, 1-CAT D6T LGP Dozer, 1-Water Truck, 1-CAT CP56B Compactor, 1-SANY SY265C LC Long-Reach Excavator, 1-Hurricane HD3700 Drop Hammer

Work Areas/Boundaries

Existing Ash Pond

Testing Equipment Used/Observed and Calibration/Re-Calibration Documentation

Nuclear Density Gauge - Standard Calibration

Tests Completed/Observed

NA

Work Comments/Observations and Test Results

7:00 - The contractor began filling in a low area north of the contact water storage area. The ash material used to fill this area was from the mound located in the central part of the closure area.
8:15 - SCS staff finished surveying the north sidelope for the section of excavation that was cleared as clean. SCS surveyed field identified locations where the seperation berm clay liner will tie-in to the encountered north sideslope.
9:00 - Weekly project update meeting with SCS, City of Ames, and contractor.
9:30 - The contractor began bailing ash from the southeast corner of the existing ash pond with the long-reach excavator.
9:45 - Clay fill started being delivered to the site. The fill was dumped at the top of the north sideslope that had been cleared as clean the day prior. The contractor began pushing the clay down the slope with a skidloader.
11:30 - SCS staff performed the standard calibration for the nuclear density gauge that will be used for clay compaction testing. The calibration was performed on the asphalt laydown area on the southwest side of the property.
12:00 - The contractor began pushing clay onto the excavation floor with a dozer. Clay fill material being delivered had high moisture content.
12:30 - The contractor used a dozer to work the ash in the closure area.
4:00 - SCS staff set some stakes to use as a visual guide for clay compaction testing and pond excavation surveying.
5:30 - The contractor worked to dewater a low area on the eastern side of the excavation floor. Clay fill continued to be imported and stockpiled on the north sideslope area.
6:30 - Long reach excavator worked material in the east containment pits pulling off the top crust layer and making additional room for future ash placement in the containment pit.

Material(s) Delivered to Site

Clay Fill

Construction Observer

Chris Calhoun, Brandon Suchomel

SCS ENGINEERS

DAILY FIELD ACTIVITIES REPORT

Client Name:	Ames Municipal Electric System	**Date:**	July 17, 2024
SCS Engineers Project Name:	Ames Ash Pond Closure	**Start Time:**	7:00 AM
SCS Engineers Project No:	27219356.02	**Stop Time:**	7:00 PM
Project Location:	Ames Municipal Electric System Ash Ponds Ames, Iowa		

Task: *Ash Excavation, Ash Placement, Cleaned Excavation Clearing, Concrete Pad Removal*

Weather Information

80°, Sunny, Winds from NW at 12 mph

Contractors, Personnel, and Equipment On Site

Contractors: JB Holland Personnel: 7
Equipment: 1-John Deere 380G LC Excavator, 1-CAT D6N LGP Dozer, 1-MTS 3630T Construction Tractor, John Deere 624K Loader, Bobcat T770 Compact Track Loader, 2-CAT Dump Trucks, 1-Case IH 9280 Tractor, 1-ROME TAW-20S Wheel Offset Disc Harrow, 1-Bobcat E50 R2 Compact Excavator, 1-Fuel Truck, 1-CAT D6T LGP Dozer, 1-Water Truck, 1-CAT CP56B Compactor, 1-SANY SY265C LC Long-Reach Excavator, 1-Hurricane HD3700 Drop Hammer, 1- John Deere 7800 Tractor, 1-Pull-behind sheepsfoot compactor with 7" pad length

Work Areas/Boundaries

Existing Ash Pond

Testing Equipment Used/Observed and Calibration/Re-Calibration Documentation

NA

Tests Completed/Observed

NA

Work Comments/Observations and Test Results

7:00 - The contractor continued excavation for the proposed separation berm. Excavated ash was hauled and dumped in the containment pit on the east side of the existing ash pond.
7:15 - The contractor used the long-reach excavator to work the ash in the east containment pit and create additional space for dumping material.
7:30 - Crew disked the ash on the west side of the closure area.
8:00 - SCS staff had a discussion with the contractor about methods for cleaning the floor of the existing pond and excavation to clean vs. design.
9:00 - The contractor bailed ash on the pond floor diagonally to the face of the excavation.
10:30 - The John Deere 380G excavator began to have mechanical issues. A John Deere mechanic arrived onsite to start repairs.
11:00 - The contractor used the long-reach excavator to remove the access point over the south contact water trench. The excavated material was placed in the south trench on both sides of the previous access point. A dozer spread out the material in the trench.
11:30 - The long-reach excavator began excavating additional dry material from the mound on the west side of the closure area and placing it above the southwest corner of the contact water collection system. The material was spread out along the south trench.
11:40 - SCS staff discussed with the contractor keeping perimeter roads cleaned up and keeping ash material, particularly the containment pits on the east side, inside the pond footprint.
12:00 - The contractor rolled the south trench with the compactor. The contractor then performed a proof roll over the south trench with a loaded dump truck. The south trench area passed the proof roll. A soft spot just north of the southwest corner of the contact water collection system was identified. Several more lifts of dry ash material were placed, compacted and proof rolled in the south trench. All additional proof rolls passed.
12:15 - Crew began disking the drying area on the east side of the existing ash pond. The disk went back and forth between the west side of the closure area and the east side of the pond for a majority of the remaining part of the day.
1:00 - SCS staff inspected a section of the pond floor to be cleared as clean. Some additional cleaning was required through a low valley in the existing clay liner. The contractor used a compact excavator to clean this area. The section of floor was cleared as clean.
1:30 - An approximately 6.5' section of hdpe pipe was found imbedded in the existing clay liner. Through discussion with the City it was decided to leave the pipe in place and fill on top of it. SCS surveyed the section of pipe for record.
3:00 - SCS staff surveyed the section of the pond floor that was cleared as clean.
4:00 - Crew continued moving material around in the east containment pit with the long-reach excavator.
5:15 - The contractor continued bailing ash on the south side of the pond floor.
6:00 - The contractor used an excavator to continue removing the existing concrete pad. Concrete was stockpiled east of the pad are for now.
6:30 - A tractor with a pull-behind sheepsfoot compactor was mobilized to the site. The compactor had approximately 7" pad length.
6:40 - Excavation and disking continued until stop of work.

Material(s) Delivered to Site

NA

Construction Observer

Chris Calhoun, Brandon Suchomel

SCS ENGINEERS

DAILY FIELD ACTIVITIES REPORT

Client Name:	Ames Municipal Electric System	**Date:**	July 18, 2024
SCS Engineers Project Name:	Ames Ash Pond Closure	**Start Time:**	7:00 AM
SCS Engineers Project No:	27219356.02	**Stop Time:**	7:30 PM
Project Location:	Ames Municipal Electric System Ash Ponds Ames, Iowa		

Task: *Ash Excavation, Ash Placement, Cleaned Excavation Clearing, Concrete Pad Removal*

Weather Information

78°, Fair, Winds from E at 8 mph

Contractors, Personnel, and Equipment On Site

Contractors: JB Holland Personnel: 7
Equipment: 1-John Deere 380G LC Excavator, 1-CAT D6N LGP Dozer, 1-MTS 3630T Construction Tractor, John Deere 624K Loader, Bobcat T770 Compact Track Loader, 2-CAT Dump Trucks, 1-Case IH 9280 Tractor, 1-ROME TAW-20S Wheel Offset Disc Harrow, 1-Bobcat E50 R2 Compact Excavator, 1-Fuel Truck, 1-CAT D6T LGP Dozer, 1-Water Truck, 1-CAT CP56B Compactor, 1-SANY SY265C LC Long-Reach Excavator, 1-Hurricane HD3700 Drop Hammer, 1- John Deere 7800 Tractor, 1-Pull-behind sheepsfoot compactor with 7" pad length

Work Areas/Boundaries

Existing Ash Pond

Testing Equipment Used/Observed and Calibration/Re-Calibration Documentation

Nuclear Density Gauge - Daily Standard Calibration

Tests Completed/Observed

Three sample compaction tests were completed with the nuclear density gauge.

Work Comments/Observations and Test Results

7:00 - The contractor continued excavation for the proposed separation berm. Some dry material was piled in the northern trench section of the closure area. The remainder of the excavated material was dumped in the containment pit on the east side of the existing ash pond.
7:30 - Crew worked on cleaning the south sideslope with a dozer.
7:30 - The contractor used the long-reach excavator to move material around in the north containment pit, creating additional space to dump material.
8:45 - Crew used a dozer to spread out the material placed in the trench on the north side of the closure area.
9:30 - The contractor began dumping excavated material in the north containment pit.
11:00 - SCS staff and the contractor had a discussion about the condition of the exterior roads and potential operational adjustments to keep the roads as clean and well maintained as possible.
11:45 - SCS staff and the contractor assessed the need to remove an additional portion of the concrete pad. It was determined that additional concrete should be removed until the clay liner at the top of the slope could be clearly identified for confirmation of ash removal.
12:00 - Crew began breaking up additional concrete with a drop hammer. An excavator removed the broken concrete.
1:30 - Performed the standard calibration for the nuclear density gauge.
1:45 - The tractor with the pull-behind compactor began rolling the clay on the pond floor. The tractor experienced a flat tire and the wheel was damaged.
2:15 - Crew used a skidloader to clean the perimeter roads.
2:45 - The contractor rolled the clay with the self-propelled compactor.
3:15 - SCS staff performed three sample clay compaction tests. Two tests were above the upper threshold for moisture content and low on percent compaction. The third sample test passed compaction and moisture requirements.
4:15 - The contractor worked on cleaning out the sump on the pond floor near the contact water storage area.
5:00 - SCS staff began inspecting the south side of the separation berm excavation to clear as clean.
5:15 - While cleaning near the top of the south sideslope, several items were discovered. 1) Ash material extending under access road adjacent to the top of the south sideslope. 2) A hole, approximately 1' in diameter and greater than 1' in depth, filled with pea gravel and sand material. 3) A 4" PVC pipe extending through the clay liner running from northeast to southwest. 4) A 0.5" diameter metal rod sticking out vertically from the top of the clay liner.
6:00 - SCS staff began surveying the clean cleared sections of the pond excavation.
7:00 - The contractor ran the water truck around the perimeter roads to help with dust control.

Material(s) Delivered to Site

Drainage Aggregate

Construction Observer

Chris Calhoun, Brandon Suchomel

SCS ENGINEERS

DAILY FIELD ACTIVITIES REPORT

Client Name:	Ames Municipal Electric System	**Date:**	July 19, 2024
SCS Engineers Project Name:	Ames Ash Pond Closure	**Start Time:**	7:00 AM
SCS Engineers Project No:	27219356.02	**Stop Time:**	4:00 PM
Project Location:	Ames Municipal Electric System Ash Ponds Ames, Iowa		

Task: *Clay Import, Clay Compaction Testing*

Weather Information

80°, Fair, Winds from S at 9 mph

Contractors, Personnel, and Equipment On Site

Contractors: JB Holland Personnel: 6
Equipment: 1-John Deere 380G LC Excavator, 1-CAT D6N LGP Dozer, 1-MTS 3630T Construction Tractor, John Deere 624K Loader, Bobcat T770 Compact Track Loader, 2-CAT Dump Trucks, 1-Case IH 9280 Tractor, 1-ROME TAW-20S Wheel Offset Disc Harrow, 1-Bobcat E50 R2 Compact Excavator, 1-Fuel Truck, 1-CAT D6T LGP Dozer, 1-Water Truck, 1-CAT CP56B Compactor, 1-SANY SY265C LC Long-Reach Excavator, 1-Hurricane HD3700 Drop Hammer

Work Areas/Boundaries

Existing Ash Pond

Testing Equipment Used/Observed and Calibration/Re-Calibration Documentation

Nuclear Density Gauge - Standard Calibration

Tests Completed/Observed

3 clay fill compaction tests completed on pond floor.

Work Comments/Observations and Test Results

7:15 - Trucks began delivering clay to the site. The clay material was dumped at the top of the north sideslope. The contractor applied water to the perimeter roads for dust control.
7:15 - The contractor worked the wet ash material on the upper level of the closure area with a dozer.
7:30 - Crew began pushing clay down the north sideslope and across the pond floor with dozers.
7:45 - Crew disked the ash in the drying areas on the east side of the existing ash pond and the west side of the closure area.
8:00 - The contractor cleaned up the perimeter roads with a skidloader.
8:45 - SCS staff met with City of Ames staff to discuss the items discovered near the top of the south sideslope the day prior. It was determined that the 4" pvc pipe and metal rod were most likely related to the transformer previously located in this area. City of Ames still reviewing.
9:30 - The contractor continued cleaning out the sump hole on the pond floor near the contact water collection area with the mini-excavator.
11:00 - The contractor used the long-reach excavator to bail ash material from the southeast corner of the existing ash pond.
11:30 - SCS staff finished surveying the excavation areas that had been cleared as clean. SCS staff also surveyed as-built points for the clay liner on the pond floor and the south sideslope.
1:15 - SCS staff performed the daily standard calibration for the nuclear density gauge.
1:45 - The contractor rolled the clay with the pull-behind compactor.
2:00 - Clay delivery ended for the day.
2:15 - The contractor rolled the clay with the self-propelled compactor.
2:45 - SCS staff performed clay fill compaction tests with the nuclear density gauge. One test passed and two tests failed.
3:30 - Crew used a dozer to push some clay material back up from the floor to the top of the north sideslope. The other dozer operator leveled out the drying area on the east side of the existing ash pond.
4:00 - The contractor made final preparations to leave for the weekend. SCS staff left the site.

Material(s) Delivered to Site

Clay Fill

Construction Observer

Chris Calhoun, Brandon Suchomel

SCS ENGINEERS

DAILY FIELD ACTIVITIES REPORT

Client Name:	Ames Municipal Electric System	**Date:**	July 22, 2024
SCS Engineers Project Name:	Ames Ash Pond Closure	**Start Time:**	8:00 AM
SCS Engineers Project No:	27219356.02	**Stop Time:**	3:30 PM
Project Location:	Ames Municipal Electric System Ash Ponds Ames, Iowa		

Task: *Ash Excavation, Ash Placement, Proof Roll, Clay Compaction*

Weather Information

83°, Partly Cloudy, Rain and thunder starting at 3:00pm, Winds from NW at 10 mph

Contractors, Personnel, and Equipment On Site

Contractors: JB Holland Personnel: 6
Equipment: 1-John Deere 380G LC Excavator, 1-CAT D6N LGP Dozer, 1-MTS 3630T Construction Tractor, John Deere 624K Loader, Bobcat T770 Compact Track Loader, 2-CAT Dump Trucks, 1-Case IH 9280 Tractor, 1-ROME TAW-20S Wheel Offset Disc Harrow, 1-Bobcat E50 R2 Compact Excavator, 1-Fuel Truck, 1-CAT D6T LGP Dozer, 1-Water Truck, 1-CAT CP56B Compactor, 1-SANY SY265C LC Long-Reach Excavator, 1-Hurricane HD3700 Drop Hammer

Work Areas/Boundaries

Existing Ash Pond

Testing Equipment Used/Observed and Calibration/Re-Calibration Documentation

Nuclear Density Gauge - Standard Calibration

Tests Completed/Observed

NA

Work Comments/Observations and Test Results

8:15 - SCS met with City of Ames staff to discuss the items found near the top of the south sideslope the week prior. It was determined that the 4" PVC pipe and the 0.5" metal grounding rod were related to the transformer that was previously removed near this location. The origins of the gravel hole are still unknown.
8:45 - The contractor continued excavation for the separation berm. Excavated material was piled in the drying area on the east side of the existing ash pond.
8:45 - Crew used a dozer to turn over the clay fill on the pond floor.
9:00 - The contractor set up pumps to dewater several areas on the pond floor.
9:30 - The contractor rolled the west side of the closure area with the self propelled compactor.
10:00 - A proof roll was performed on the west side of the closure area where previous proof rolls have failed. The proof roll passed.
10:15 - The contractor began hauling dry excavated material to the west side of the closure area. The material was spread out with a dozer.
11:00 - Crew utilized a dozer to work the ash on the upper level of the closure area.
11:30 - The contractor disked the ash that was placed on the west side of the closure area.
12:45 - Crew rolled the clay fill on the pond floor with the pull-behind compactor.
1:15 - The contractor bailed material out of the southeast corner of the existing ash pond with a dozer and the long-reach excavator.
1:45 - SCS performed the daily standard calibration for the nuclear density gauge.
2:30 - Crew rolled the clay fill on the pond floor with the self-propelled compactor.
3:00 - Rain and thunder moving into the area.
3:30 - The contractor called work for the day due to the weather conditions. SCS and the contractor left the site.

Material(s) Delivered to Site

NA

Construction Observer

Chris Calhoun

SCS ENGINEERS

DAILY FIELD ACTIVITIES REPORT

Client Name:	Ames Municipal Electric System	**Date:**	July 23, 2024
SCS Engineers Project Name:	Ames Ash Pond Closure	**Start Time:**	7:00 AM
SCS Engineers Project No:	27219356.02	**Stop Time:**	4:30 PM
Project Location:	Ames Municipal Electric System Ash Ponds Ames, Iowa		

Task: *Ash Excavation, Ash Placement, Contact Water Cleanouts, Dewatering*

Weather Information

86°, Partly Cloudy, Rain and thunder starting around 4:30pm, Winds from W at 8 mph

Contractors, Personnel, and Equipment On Site

Contractors: JB Holland Personnel: 5
Equipment: 1-John Deere 380G LC Excavator, 1-CAT D6N LGP Dozer, 1-MTS 3630T Construction Tractor, John Deere 624K Loader, Bobcat T770 Compact Track Loader, 2-CAT Dump Trucks, 1-Case IH 9280 Tractor, 1-ROME TAW-20S Wheel Offset Disc Harrow, 1-Bobcat E50 R2 Compact Excavator, 1-Fuel Truck, 1-CAT D6T LGP Dozer, 1-Water Truck, 1-CAT CP56B Compactor, 1-SANY SY265C LC Long-Reach Excavator, 1-Hurricane HD3700 Drop Hammer, 1 -John Deere 755D Crawler Loader, 1-John Deere 310 Disk, 1-ROME Disc

Work Areas/Boundaries

Existing Ash Pond

Testing Equipment Used/Observed and Calibration/Re-Calibration Documentation

NA

Tests Completed/Observed

NA

Work Comments/Observations and Test Results

7:30 - The contractor worked the ash on the upper level of the closure area. Crew also cut a ditch with a dozer to dewater an area on the west side of the closure area. Water was drained towards the cleanout stubs in the southwest corner of the closure area.
7:30 - Crew continued bailing ash from the southeast corner of the existing ash pond. The excavated ash material was piled in the drying area on the east side of the existing ash pond.
8:30 - The contractor welded additional pipe sections to the contact water cleanout stubs in the southwest corner of the closure area.
8:45 - Crew disked the ash on the west side of the closure area.
9:00 - A John Deere 755D track loader and two disks were mobilized to the site.
9:00 - The contractor extended the contact water cleanouts in the northwest corner of the closure area.
10:00 - Crew used the long-reach excavator to transfer the excavated ash material from the east drying area to the containment pit on the west side of the drying area. The long-reach operator continued bailing ash from the southeast corner of the existing ash pond and transferring the excavated material to the west containment pit for the remainder of the day.
10:30 - The contractor worked to dewater the bottom of the separation berm excavation.
11:00 - Crew dewatered the southwest corner of the closure area around the contact water cleanouts.
11:45 - The contractor began placing a lift of dry ash material in the low area around the cleanouts in the southwest corner of the closure area. The dry material was taken from the mound on the west side of the closure area. Drainage aggregate was placed around the contact water cleanouts.
12:45 - The contractor rolled the self propelled compactor over the lift placed around the contact water cleanouts. Crew continued placing and compacting lifts of ash in the low area around the cleanouts until the grade was level with the remainder of the west trench. Drainage aggregate was placed around the cleanouts with each lift.
2:30 - Crew used a dozer to smooth out the clay fill on the floor of the separation berm exacavation.
3:45 - Crew used a dozer to smooth out the material on the west side of the closure area.
3:15 - The contractor finished placing lifts of ash around the cleanouts in the southwest corner of the closure area.
4:15 - Rain and thunder moving into the area.
4:30 - SCS left the site and the contractor paused work. Once the rain subsided, the contractor turned on pumps to dewater.

Material(s) Delivered to Site

NA

Construction Observer

Chris Calhoun

SCS ENGINEERS

DAILY FIELD ACTIVITIES REPORT

Client Name:	Ames Municipal Electric System	**Date:**	July 24, 2024
SCS Engineers Project Name:	Ames Ash Pond Closure	**Start Time:**	8:00 AM
SCS Engineers Project No:	27219356.02	**Stop Time:**	4:30 PM
Project Location:	Ames Municipal Electric System Ash Ponds Ames, Iowa		

Task: *Ash Excavation, Ash Placement, Dewatering*

Weather Information

83°, Cloudy, Winds from W at 6 mph

Contractors, Personnel, and Equipment On Site

Contractors: JB Holland Personnel: 2
Equipment: 1-John Deere 380G LC Excavator, 1-CAT D6N LGP Dozer, 1-MTS 3630T Construction Tractor, John Deere 624K Loader, Bobcat T770 Compact Track Loader, 2-CAT Dump Trucks, 1-Case IH 9280 Tractor, 1-ROME TAW-20S Wheel Offset Disc Harrow, 1-Bobcat E50 R2 Compact Excavator, 1-Fuel Truck, 1-CAT D6T LGP Dozer, 1-Water Truck, 1-CAT CP56B Compactor, 1-SANY SY265C LC Long-Reach Excavator, 1-Hurricane HD3700 Drop Hammer, 1 -John Deere 755D Crawler Loader, 1-John Deere 310 Disk, 1-ROME Disc

Work Areas/Boundaries

Existing Ash Pond

Testing Equipment Used/Observed and Calibration/Re-Calibration Documentation

NA

Tests Completed/Observed

NA

Work Comments/Observations and Test Results

8:00 - The contractor turned on the pump to dewater the southeast corner of the existing ash pond.
8:45 - The contractor used a submersible pump to dewater the low area around the contact water cleanouts in the northwest corner of the closure area. The pump hose discharged into the open end of one of the cleanouts.
9:15 - Crew set up the submersible pump to dewater the area east of the clay fill on the existing pond floor.
9:45 - The contractor used the mini-excavator to remove the wet ash material around the cleanouts in the northwest corner of the closure area.
11:00 - Crew excavated dry ash material from the mound on the west side of the closure area and piled it near the northwest contact water cleanouts.
11:15 - The John Deere 380G excavator experienced mechanical issues and stopped being utilized. The contractor began excavating ash with the John Deere track loader.
11:45 - The contractor began placing a lift of dry ash material in the low area around the cleanouts in the northwest corner of the closure area. The contact water cleanouts were covered with drainage aggregate.
12:45 - Due to limitations with the slope into the low area around the cleanouts, the contractor compacted the first lift of ash with a vibratory plate compactor that was attached to the mini-excavator.
1:15 - The contractor continued placing lifts of dry ash material in the low area around the cleanouts. Subsequent lifts were rolled with the self-propelled compactor. The plate compactor was also used to better compact the area immediately around the cleanouts. Drainage aggregate was placed around the cleanouts with each lift.
2:00 - The contractor finished placing lifts of ash around the cleanouts in the northwest corner of the closure area.
3:00 - The contractor used the dozer to cut several ditches to drain water from the closure area.
4:00 - Crew bailed ash from the southeast corner of the existing ash pond with the long-reach excavator. The excavated ash material was piled in the drying area on the east side of the existing ash pond.
4:15 - The dozer cut a ditch in the east drying area to drain water towards the floor of the pond excavation.
4:30 - SCS left the site.

Material(s) Delivered to Site

NA

Construction Observer

Chris Calhoun

SCS ENGINEERS

DAILY FIELD ACTIVITIES REPORT

Client Name:	Ames Municipal Electric System	**Date:**	July 25, 2024
SCS Engineers Project Name:	Ames Ash Pond Closure	**Start Time:**	7:45 AM
SCS Engineers Project No:	27219356.02	**Stop Time:**	7:15 PM
Project Location:	Ames Municipal Electric System Ash Ponds Ames, Iowa		

Task: *Cement Conditioning, Dewatering, Ash Excavation*

Weather Information

80°, Cloudy, Winds from W at 11 mph

Contractors, Personnel, and Equipment On Site

Contractors: JB Holland Personnel: 5
Equipment: 1-John Deere 380G LC Excavator, 1-CAT D6N LGP Dozer, 1-MTS 3630T Construction Tractor, John Deere 624K Loader, Bobcat T770 Compact Track Loader, 2-CAT Dump Trucks, 1-Case IH 9280 Tractor, 1-ROME TAW-20S Wheel Offset Disc Harrow, 1-Bobcat E50 R2 Compact Excavator, 1-Fuel Truck, 1-CAT D6T LGP Dozer, 1-Water Truck, 1-CAT CP56B Compactor, 1-SANY SY265C LC Long-Reach Excavator, 1-Hurricane HD3700 Drop Hammer, 1 -John Deere 755D Crawler Loader, 1-John Deere 310 Disk, 1-ROME Disc, 1-Stoltz Truck-Mounted Site Spreader

Work Areas/Boundaries

Existing Ash Pond

Testing Equipment Used/Observed and Calibration/Re-Calibration Documentation

NA

Tests Completed/Observed

NA

Work Comments/Observations and Test Results

8:00 - Crew set up a submersible pump to dewater the area east of the clay fill on the existing pond floor. The pump hose discharged west of the clay fill and water drained towards the sump near the contact water storage area.
8:00 - The contractor used the long-reach excavator to move material around in the east containment pit.
8:15 - Crew used a dozer to scrape off the top layer of wet clay fill material. The material was pushed up and piled on the north sideslope.
9:00 - The contractor worked the ash in the closure area with a dozer.
10:30 - The dozer operator created a pad for the long-reach excavator to utilize on the west side of the excavation in the southeast corner of the existing ash pond.
11:00 - The long-reach excavator bailed ash from the southeast corner of the existing ash pond. Excavated material was placed in the west containment pit.
12:00 - The dozer operator pushed wet ash material in the east drying area towards the west containment pit.
1:30 - The contractor continued working to dewater the bottom of the separation berm excavation on both sides of the clay fill.
2:15 - Crew disked the ash in the closure area.
2:30 - SCS surveyed the excavated east side slope in the closure area.
3:00 - Crew continued scraping off the top layer of wet clay fill with a dozer.
4:00 - Cement trucks arrived onsite. The contractor began loading up the Stoltz spreader with cement.
4:30 - The contractor began applying cement to the ash in the closure area with the site spreader. A dozer pulled the spreader through areas with more saturated material.
5:15 - Crew used a disk attached to a track loader to work the cement into the ash material. Additional cement was loaded into the spreader.
5:30 - The contractor continued applying cement to the ash in the closure area. The cement material was disked into the ash.
6:30 - An incident occured where the long-reach excavator began sliding down the slope towards the excavation floor in the southeast corner of the existing ash pond. Crew were able to guide the operator down onto the pond floor without issue.
6:45 - The cement spreader made one final pass through the closure area to apply cement. The cement was worked into the ash with a disk.
7:15 - SCS left the site.

Material(s) Delivered to Site

Cement

Construction Observer

Chris Calhoun

SCS ENGINEERS

DAILY FIELD ACTIVITIES REPORT

Client Name:	Ames Municipal Electric System	**Date:**	July 26, 2024
SCS Engineers Project Name:	Ames Ash Pond Closure	**Start Time:**	7:00 AM
SCS Engineers Project No:	27219356.02	**Stop Time:**	2:30 PM
Project Location:	Ames Municipal Electric System Ash Ponds Ames, Iowa		

Task: *Ash Excavation, Clay Compaction Testing*

Weather Information

87°, Mostly Cloudy, Winds from SE at 14 mph

Contractors, Personnel, and Equipment On Site

Contractors: JB Holland Personnel: 2
Equipment: 1-John Deere 380G LC Excavator, 1-CAT D6N LGP Dozer, 1-MTS 3630T Construction Tractor, John Deere 624K Loader, Bobcat T770 Compact Track Loader, 2-CAT Dump Trucks, 1-Case IH 9280 Tractor, 1-ROME TAW-20S Wheel Offset Disc Harrow, 1-Bobcat E50 R2 Compact Excavator, 1-Fuel Truck, 1-CAT D6T LGP Dozer, 1-Water Truck, 1-CAT CP56B Compactor, 1-SANY SY265C LC Long-Reach Excavator, 1-Hurricane HD3700 Drop Hammer, 1 -John Deere 755D Crawler Loader, 1-John Deere 310 Disk, 1-ROME Disc, 1-Stoltz Truck-Mounted Site Spreader

Work Areas/Boundaries

Existing Ash Pond

Testing Equipment Used/Observed and Calibration/Re-Calibration Documentation

Nuclear Density Gauge - Standard Calibration

Tests Completed/Observed

Two clay fill compaction tests completed on pond floor.

Work Comments/Observations and Test Results

7:30 - The long-reach excavator bailed ash from the southeast corner of the existing ash pond. Excavated material was placed in the drying area to the north.
8:00 - Crew rolled the clay fill on the pond floor with the pull-behind compactor.
8:45 - Crew rolled the clay fill on the pond floor with the self-propelled compactor.
9:45 - SCS performed two clay compaction tests with the nuclear density gauge. Both tests failed for moisture content and percent compaction. After the two failed tests, the contractor decided to not have any more tests be performed.
10:30 - The contractor disked the clay fill on the pond floor with a pull-behind disk attached to a dozer. The contractor disked the clay several times over the next 2-3 hours.
12:15 - The contractor used a dozer to smooth out the east drying area.
12:30 - Crew used a skidloader to clean up the perimeter roads.
1:30 - The contractor utilized a dozer to work the ash in the closure area.
1:45 - Crew smoothed out the clay fill on the pond floor with a dozer.
2:15 - The contractor rolled the clay fill on the pond floor with the pull-behind compactor
2:30 - The contractor and SCS staff left the site.

Material(s) Delivered to Site

NA

Construction Observer

Chris Calhoun

SCS ENGINEERS

DAILY FIELD ACTIVITIES REPORT

Client Name:	Ames Municipal Electric System	**Date:**	July 29, 2024
SCS Engineers Project Name:	Ames Ash Pond Closure	**Start Time:**	8:15 AM
SCS Engineers Project No:	27219356.02	**Stop Time:**	8:00 PM
Project Location:	Ames Municipal Electric System Ash Ponds Ames, Iowa		

Task: *Separation Berm Excavation, Clay Compaction Testing*

Weather Information

90°, Mostly Cloudy, Winds from N at 5 mph

Contractors, Personnel, and Equipment On Site

Contractors: JB Holland Personnel: 5
Equipment: 2-John Deere 380G LC Excavators, 1-CAT D6N LGP Dozer, 1-MTS 3630T Construction Tractor, John Deere 624K Loader, Bobcat T770 Compact Track Loader, 2-CAT Dump Trucks, 1-Case IH 9280 Tractor, 1-ROME TAW-20S Wheel Offset Disc Harrow, 1-Bobcat E50 R2 Compact Excavator, 1-Fuel Truck, 1-CAT D6T LGP Dozer, 1-Water Truck, 1-CAT CP56B Compactor, 1-SANY SY265C LC Long-Reach Excavator, 1-Hurricane HD3700 Drop Hammer, 1 -John Deere 755D Crawler Loader, 1-John Deere 310 Disk, 1-ROME Disc, 2-Stoltz Truck-Mounted Site Spreaders

Work Areas/Boundaries

Existing Ash Pond

Testing Equipment Used/Observed and Calibration/Re-Calibration Documentation

Nuclear Density Gauge - Standard Calibration

Tests Completed/Observed

Three clay fill compaction tests completed on pond floor.

Work Comments/Observations and Test Results

8:15 - The contractor set up and started pumps to dewater the floor of the separation berm excavation.
8:30 - A John Deere mechanic arrived onsite to look at the 380G excavator that was experiencing mechanical issues the week prior.
9:00 - The contractor started the pump to dewater the southeast corner of the existing ash pond.
9:00 - Another John Deere 380G excavator was mobilized to the site.
10:30 - Crew used a dozer to push wet ash material to the perimeter of the east drying area, adjacent to the containment pits.
11:00 - The contractor used an excavator to dig two test holes in the west containment pit in order to assess the condition of the ash.
12:00 - The contractor utilized a dozer to scrape off a thin layer of wet clay fill on the pond floor.
12:45 - Crew continued excavation for the proposed separation berm. Excavated material was placed in the east drying area.
1:15 - The contractor disked the ash in the closure area. The closure area was disked several more times throughout the remainder of the day.
1:30 - SCS staff checked the integrity of the monitoring well (MW-102) that previously had a protective bollard hit by a dozer. SCS ran a bailer down the well to water depth to verify no damage to the well was sustained.
2:45 - The contractor disked the clay fill on the pond floor with a pull-behind disk attached to a dozer. The clay was disked one additional time in the afternoon.
5:45 - Crew smoothed out the clay fill on the pond floor with a dozer.
6:15 - Crew rolled the clay fill on the pond floor with the pull-behind compactor.
6:30 - SCS performed the daily standard calibration for the nuclear density gauge.
6:45 - Crew used a skidloader to clean up the perimeter roads.
7:00 - Crew rolled the clay fill on the pond floor with the self-propelled compactor.
7:30 - SCS performed three clay compaction tests with the nuclear density gauge.
8:00 - The contractor and SCS staff left the site.

Material(s) Delivered to Site

NA

Construction Observer

Chris Calhoun

SCS ENGINEERS

DAILY FIELD ACTIVITIES REPORT

Client Name:	Ames Municipal Electric System	**Date:**	July 31, 2024
SCS Engineers Project Name:	Ames Ash Pond Closure	**Start Time:**	8:00 AM
SCS Engineers Project No:	27219356.02	**Stop Time:**	2:30 PM
Project Location:	Ames Municipal Electric System Ash Ponds Ames, Iowa		

Task: *Test Pitting, Ash Conditioning*

Weather Information

89°, Sunny, Winds from SE at 10 mph

Contractors, Personnel, and Equipment On Site

Contractors: JB Holland Personnel: 1
Equipment: 2-John Deere 380G LC Excavators, 1-CAT D6N LGP Dozer, 1-MTS 3630T Construction Tractor, John Deere 624K Loader, Bobcat T770 Compact Track Loader, 2-CAT Dump Trucks, 1-Case IH 9280 Tractor, 1-ROME TAW-20S Wheel Offset Disc Harrow, 1-Bobcat E50 R2 Compact Excavator, 1-Fuel Truck, 1-CAT D6T LGP Dozer, 1-Water Truck, 1-CAT CP56B Compactor, 1-Hurricane HD3700 Drop Hammer, 1- John Deere 7800 Tractor, 1-Pull-behind sheepsfoot compactor with 7" pad length, 1 -John Deere 755D Crawler Loader, 1-John Deere 310 Disk, 1-ROME Disc, 2-Stoltz Truck-Mounted Site Spreaders, 1-CAT D6K2 LGP Dozer

Work Areas/Boundaries

Existing Ash Pond

Testing Equipment Used/Observed and Calibration/Re-Calibration Documentation

NA

Tests Completed/Observed

NA

Work Comments/Observations and Test Results

8:00 - SCS staff arrived onsite. The long-reach excavator was staged to be taken offsite. A CAT D6K2 LGP Dozer had been mobilized to the site.
9:15 - The contractor began excavating test pits in the roadway south of the closure area with the mini-excavator. Test pits were excavated at 45-foot intervals starting 45 feet west of the existing concrete pad. Test pits were excavated to the depth of clay or to a maximum of 4 feet. SCS staff discovered ash material in the test pits between the road base and top of clay. Pieces of waste found in the pits suggested the ash was RDF ash. SCS staff recorded the approximate depth to the top of clay along for each test pit.
11:30 - The contractor disked the ash in the closure area.
12:30 - The contractor continued test pitting.
1:00 - The contractor concluded test pitting.
1:15 - SCS staff surveyed the locations of the test pits.
1:15 - The contractor disked the ash in the closure area.
1:45 - The contractor began backfilling the test pits. Backfill was compacted in approximately 1 foot lifts.
2:15 - The contractor used a dozer to grade transitions between the various levels of the closure area.
2:30 - SCS staff left the site.

Material(s) Delivered to Site

NA

Construction Observer

Chris Calhoun

SCS ENGINEERS

DAILY FIELD ACTIVITIES REPORT

Client Name:	Ames Municipal Electric System	**Date:**	August 1, 2024
SCS Engineers Project Name:	Ames Ash Pond Closure	**Start Time:**	8:30 AM
SCS Engineers Project No:	27219356.02	**Stop Time:**	4:15 PM
Project Location:	Ames Municipal Electric System Ash Ponds Ames, Iowa		

Task: *Proof Roll, Ash Conditioning*

Weather Information

86°, Sunny, Winds from NW at 15 mph

Contractors, Personnel, and Equipment On Site

Contractors: JB Holland Personnel: 2
Equipment: 2-John Deere 380G LC Excavators, 1-CAT D6N LGP Dozer, 1-MTS 3630T Construction Tractor, John Deere 624K Loader, Bobcat T770 Compact Track Loader, 2-CAT Dump Trucks, 1-Case IH 9280 Tractor, 1-ROME TAW-20S Wheel Offset Disc Harrow, 1-Bobcat E50 R2 Compact Excavator, 1-Fuel Truck, 1-CAT D6T LGP Dozer, 1-Water Truck, 1-CAT CP56B Compactor, 1-Hurricane HD3700 Drop Hammer, 1- John Deere 7800 Tractor, 1-Pull-behind sheepsfoot compactor with 7" pad length, 1 -John Deere 755D Crawler Loader, 1-John Deere 310 Disk, 1-ROME Disc, 2-Stoltz Truck-Mounted Site Spreaders, 1-CAT D6K2 LGP Dozer

Work Areas/Boundaries

Existing Ash Pond

Testing Equipment Used/Observed and Calibration/Re-Calibration Documentation

NA

Tests Completed/Observed

NA

Work Comments/Observations and Test Results

8:30 - The contractor disked the closure area.
10:30 - The contractor proof rolled the low area northwest of the contact water storage area. The proof roll passed.
10:45 - The dozer operator leveled out the ash in the closure area. Crew began rolling the leveled-out areas with the self-propelled compactor.
11:30 - The contractor used a dozer to push a lift of ash material from the central mound in the closure area to the low area northwest of the contact water storage area.
12:45 - The contractor performed a proof roll of the closure area. Most areas passed the proof roll except for two soft spots that experienced rutting that exceeded allowable levels.
1:15 - The contractor used an excavator to core out the material in the two soft spots that failed the proof roll.
2:00 - The contractor began backfilling the cored-out areas with dry ash material excavated from the mound on the west side of the closure area.
2:15 - The dozer operator pushed another lift of ash material from the central mound in the closure area to the low area northwest of the contact water storage area.
2:30 - The contractor compacted the areas that ware cored-out and backfilled with better material.
3:00 - The contractor proof rolled the two areas that failed the original proof roll. The proof roll passed in both areas.
3:15 - Crew compacted the lift of ash northwest of the contact water storage area. This area was then proof rolled. The proof roll passed.
4:00 - The contractor used a dozer to dewater the top of the clay fill on the pond floor.
4:15 - SCS staff left the site.

Material(s) Delivered to Site

NA

Construction Observer

Chris Calhoun

SCS ENGINEERS

DAILY FIELD ACTIVITIES REPORT

Client Name:	Ames Municipal Electric System	**Date:**	August 2, 2024
SCS Engineers Project Name:	Ames Ash Pond Closure	**Start Time:**	8:00 AM
SCS Engineers Project No:	27219356.02	**Stop Time:**	4:45 PM
Project Location:	Ames Municipal Electric System Ash Ponds Ames, Iowa		

Task: *Ash Placement, Cement Application, Clay Compaction Testing*

Weather Information

89°, Sunny, Winds from NW at 8 mph

Contractors, Personnel, and Equipment On Site

Contractors: JB Holland Personnel: 2
Equipment: 2-John Deere 380G LC Excavators, 1-CAT D6N LGP Dozer, 1-MTS 3630T Construction Tractor, John Deere 624K Loader, Bobcat T770 Compact Track Loader, 2-CAT Dump Trucks, 1-ROME TAW-20S Wheel Offset Disc Harrow, 1-Bobcat E50 R2 Compact Excavator, 1-Fuel Truck, 1-CAT D6T LGP Dozer, 1-Water Truck, 1-CAT CP56B Compactor, 1-Hurricane HD3700 Drop Hammer, 1- John Deere 7800 Tractor, 1-Pull-behind sheepsfoot compactor with 7" pad length, 1 -John Deere 755D Crawler Loader, 1-John Deere 310 Disk, 1-ROME Disc, 2-Stoltz Truck-Mounted Site Spreaders, 1-CAT D6K2 LGP Dozer, 1-Challenger MT765D Crawler Tractor

Work Areas/Boundaries

Existing Ash Pond

Testing Equipment Used/Observed and Calibration/Re-Calibration Documentation

Nuclear Density Gauge - Standard Calibration

Tests Completed/Observed

Three clay fill compaction tests completed on pond floor.

Work Comments/Observations and Test Results

8:00 - The contractor placed a lift of ash material in the closure area. The material was excavated from the west containment pit on the east side of the existing ash pond.
10:30 - The contractor disked the clay fill on the pond floor.
11:00 - Cement trucks arrived onsite and the contractor started loading up the cement spreaders.
11:15 - The contractor used a dozer to level out the area below the excavated portion of the west containment pit.
11:20 - The dozer operator pulled the site spreader through the closure area as the spreader applied cement to the ash.
12:00 - Crew used a skidloader to clean up the access road in the northeast corner of the site.
12:00 - The contractor used an excavator to move material around in the east drying area.
12:15 - The contractor continued applying cement to the ash in the closure area with the site spreader.
1:00 - The contractor disked the ash beneath the excavated portion of the west containment pit.
2:00 - The contractor disked the closure area to work the cement powder into the ash.
2:15 - The site spreader made one final pass through the closure area to apply cement.
2:15 - The contractor leveled out the clay fill on the pond floor with a dozer.
2:45 - Crew rolled the clay fill with the pull-behind compactor.
3:00 - SCS staff performed the standard calibration for the nuclear density gauge.
3:15 - The contractor rolled the clay fill with the self-propelled compactor.
3:20 - Crew smoothed out the ash in the closure area with dozers.
4:00 - SCS staff performed compaction tests on the clay fill with the nuclear density gauge.
4:45 - SCS staff and the contractor left the site.

Material(s) Delivered to Site

Cement

Construction Observer

Chris Calhoun

SCS ENGINEERS

DAILY FIELD ACTIVITIES REPORT

Client Name:	Ames Municipal Electric System	**Date:**	August 5, 2024
SCS Engineers Project Name:	Ames Ash Pond Closure	**Start Time:**	8:30 AM
SCS Engineers Project No:	27219356.02	**Stop Time:**	4:30 PM
Project Location:	Ames Municipal Electric System Ash Ponds Ames, Iowa		

Task: *Ash Placement, Cement Application, Clay Compaction Testing*

Weather Information

93°, Sunny, Winds from S at 10 mph

Contractors, Personnel, and Equipment On Site

Contractors: JB Holland Personnel: 6
Equipment: 2-John Deere 380G LC Excavators, 1-CAT D6N LGP Dozer, 1-MTS 3630T Construction Tractor, John Deere 624K Loader, Bobcat T770 Compact Track Loader, 2-CAT Dump Trucks, 1-ROME TAW-20S Wheel Offset Disc Harrow, 1-Bobcat E50 R2 Compact Excavator, 1-Fuel Truck, 1-CAT D6T LGP Dozer, 1-Water Truck, 1-CAT CP56B Compactor, 1-Hurricane HD3700 Drop Hammer, 1- John Deere 7800 Tractor, 1-Pull-behind sheepsfoot compactor with 7" pad length, 1 -John Deere 755D Crawler Loader, 1-John Deere 310 Disk, 1-ROME Disc, 2-Stoltz Truck-Mounted Site Spreaders, 1-CAT D6K2 LGP Dozer, 1-Challenger MT765D Crawler Tractor

Work Areas/Boundaries

Existing Ash Pond

Testing Equipment Used/Observed and Calibration/Re-Calibration Documentation

Nuclear Density Gauge - Standard Calibration

Tests Completed/Observed

One clay fill compaction test completed on pond floor.

Work Comments/Observations and Test Results

8:30 - The contrator rolled the ash in the closure area with the self-propelled compactor. The contractor then proof rolled the closure area. The proof roll passed.
9:15 - The contractor placed another lift of ash material in the closure area. The material was excavated from the stockpiles in the drying area on the east side of the existing ash pond.
10:00 - The contractor applied water to the perimeter roadways for dust control.
12:45 - SCS staff performed the standard calibration for the nuclear density gauge.
1:00 - The contractor used a dozer to work the ash in the east containment pit.
1:30 - Crew used an excavator to move material around and create additional space in the east drying area.
1:45 - The contractor rolled the clay fill on the south side of the separation berm with the self-propelled compactor.
1:45 - Cement trucks arrived onsite and the contractor started loading up the site spreaders.
1:50 - Crew used a skidloader to clean the perimeter roads.
1:55 - The contractor used a dozer to pull a site spreader through the closure area as the spreader applied cement to the ash.
2:00 - The contractor set up a pump to dewater the east side of the separation berm excavation.
3:20 - The contractor disked the closure area to work the cement powder into the ash.
3:45 - The contractor hauled crane mats back to the laydown area from the southeast corner of the existing ash pond.
4:10 - SCS staff performed a compaction test on the clay fill with the nuclear density gauge.
4:30 - SCS staff left the site.

Material(s) Delivered to Site

50.66 Tons of Cement

Construction Observer

Chris Calhoun

SCS ENGINEERS

DAILY FIELD ACTIVITIES REPORT

Client Name:	Ames Municipal Electric System	**Date:**	August 6, 2024
SCS Engineers Project Name:	Ames Ash Pond Closure	**Start Time:**	8:00 AM
SCS Engineers Project No:	27219356.02	**Stop Time:**	5:30 PM
Project Location:	Ames Municipal Electric System Ash Ponds Ames, Iowa		

Task: *Clay Fill Import, Separation Berm Excavation, Cleaned Excavation Clearing, Ash Placement*

Weather Information

71°, Cloudy, Winds from N at 16 mph

Contractors, Personnel, and Equipment On Site

Contractors: JB Holland Personnel: 5
Equipment: 2-John Deere 380G LC Excavators, 1-CAT D6N LGP Dozer, 1-MTS 3630T Construction Tractor, John Deere 624K Loader, Bobcat T770 Compact Track Loader, 2-CAT Dump Trucks, 1-ROME TAW-20S Wheel Offset Disc Harrow, 1-Bobcat E50 R2 Compact Excavator, 1-Fuel Truck, 1-CAT D6T LGP Dozer, 1-Water Truck, 1-CAT CP56B Compactor, 1-Hurricane HD3700 Drop Hammer, 1- John Deere 7800 Tractor, 1-Pull-behind sheepsfoot compactor with 7" pad length, 1 -John Deere 755D Crawler Loader, 1-John Deere 310 Disk, 1-ROME Disc, 2-Stoltz Truck-Mounted Site Spreaders, 1-CAT D6K2 LGP Dozer, 1-Challenger MT765D Crawler Tractor

Work Areas/Boundaries

Existing Ash Pond

Testing Equipment Used/Observed and Calibration/Re-Calibration Documentation

NA

Tests Completed/Observed

NA

Work Comments/Observations and Test Results

8:00 - Clay fill being delivered to the site and dumped at the top of the north sideslope. The contractor used dozers to push a lift of clay fill over the previously placed lift.
8:00 - The contractor applied water to the perimeter roadways for dust control.
9:00 - Construction Progress Meeting
11:00 - The contractor continued excavation for the proposed separation berm. The excavated material was hauled and dumped in the containment pit north of the existing ash pond outlet.
11:45 - The contractor used a dozer to clean the southeast corner of the separation berm excavation. Water in this area was pushed towards a submerssible pump and discharged to the sump near the contact water storage area.
2:15 - SCS staff surveyed a vegetated area on the east slope of the closure area to help delineate what was excavated for slope stability purposes.
2:45 - SCS staff assessed a section of the separation berm excavation for remaining ash, the area was cleared as clean.
3:00 - SCS staff surveyed the area that was cleared as clean.
3:15 - The contractor used a dozer to push a lift of clay fill into the area that was cleared as clean.
3:45 - Crew used a skidloader to clean the perimeter roads.
4:00 - The contractor continued excavation for the proposed separation berm. Excavated material was hauled to the closure area and dumped. The material was spread out in the cosure area with a dozer.
4:15 - The contractor rolled the clay fill in the southeast portion of the separation berm with the pull-behind compactor.
5:20 - The contractor rolled the clay fill with the self-propelled compactor.
5:30 - SCS staff left the site.

Material(s) Delivered to Site

Clay Fill

Construction Observer

Chris Calhoun

SCS ENGINEERS

DAILY FIELD ACTIVITIES REPORT

Client Name:	Ames Municipal Electric System	**Date:**	August 7, 2024
SCS Engineers Project Name:	Ames Ash Pond Closure	**Start Time:**	8:30 AM
SCS Engineers Project No:	27219356.02	**Stop Time:**	7:00 PM
Project Location:	Ames Municipal Electric System Ash Ponds Ames, Iowa		

Task: *Cement Application, Separation Berm Excavation, Clay Compaction Testing*

Weather Information

78°, Sunny, Winds from SE at 8 mph

Contractors, Personnel, and Equipment On Site

Contractors: JB Holland Personnel: 5
Equipment: 2-John Deere 380G LC Excavators, 1-CAT D6N LGP Dozer, John Deere 624K Loader, Bobcat T770 Compact Track Loader, 2-CAT Dump Trucks, 1-ROME TAW-20S Wheel Offset Disc Harrow, 1-Bobcat E50 R2 Compact Excavator, 1-Fuel Truck, 1-CAT D6T LGP Dozer, 1-Water Truck, 1-CAT CP56B Compactor, 1-Hurricane HD3700 Drop Hammer, 1- John Deere 7800 Tractor, 1-Pull-behind sheepsfoot compactor with 7" pad length, 1 -John Deere 755D Crawler Loader, 1-John Deere 310 Disk, 1-ROME Disc, 2-Stoltz Truck-Mounted Site Spreaders, 1-CAT D6K2 LGP Dozer, 1-Challenger MT765D Crawler Tractor, 1-CAT Motor Grader

Work Areas/Boundaries

Existing Ash Pond

Testing Equipment Used/Observed and Calibration/Re-Calibration Documentation

Nuclear Density Gauge - Standard Calibration

Tests Completed/Observed

Nine clay fill compaction tests completed.

Work Comments/Observations and Test Results

8:30 - The contractor continued excavation for the separation berm. Excavated material was placed in the east containment pit.
8:30 - SCS staff performed the standard calibration for the nuclear density gauge.
8:50 - The contractor applied cement to the ash in the closure area with a site spreader. Crew used a dozer to pull the spreader through the ash. Three truckloads of cement were applied to the ash throughout the morning.
9:00 - SCS performed compaction tests on the clay fill.
10:30 - The contractor rolled the self-propelled compactor over a section of clay fill that failed to reach the specified 95% compaction.
11:15 - The contractor excavated the top ~4 feet from the current face of the pond excavation. The material was piled approximately 20 feet to the east. The material was later spread out with a dozer.
11:30 - SCS staff retested the area that failed compaction testing earlier in the day. The retest passed.
11:45 - The contractor placed an additional lift of clay fill on the southeast section of the separation berm.
12:45 - Crew rolled the lift of clay fill with the pull-behind compactor.
1:15 - Crew rolled the lift of clay fill with the self-propelled compactor.
1:20 - The contractor disked the cement into the ash in the closure area.
2:00 - Crew rolled the lift of clay fill in the southeast section of the separation berm an additional time with the self-propelled compactor.
2:05 - The contractor pushed another lift of clay fill down the slope on the north side of the separation berm.
3:20 - SCS staff performed a compaction test on the compacted lift of clay fill in the southeast section of the separation berm.
3:40 - The contractor used dozers to level out the ash in closure area.
4:00 - Crew rolled the lift of clay fill on the north side of the separation berm with the pull-behind compactor.
4:45 - The contractor continued excavation for the separation berm. Excavated material was placed in the east drying area.
5:00 - Crew rolled the lift of clay fill on the north side of the separation berm with the self-propelled compactor.
6:30 - SCS staff performed compaction tests on the compacted lift of clay fill on the north side of the separation berm.
6:45 - The contractor used a motor grader to level out the perimeter access roads.
7:00 - SCS staff left the site.

Material(s) Delivered to Site

77.87 Tons of Cement

Construction Observer

Chris Calhoun

SCS ENGINEERS

DAILY FIELD ACTIVITIES REPORT

Client Name:	Ames Municipal Electric System	**Date:**	August 8, 2024
SCS Engineers Project Name:	Ames Ash Pond Closure	**Start Time:**	8:30 AM
SCS Engineers Project No:	27219356.02	**Stop Time:**	6:00 PM
Project Location:	Ames Municipal Electric System Ash Ponds Ames, Iowa		

Task: *Clay Fill Import, Separation Berm Excavation, Cleaned Excavation Clearing, Clay Compaction Testing*

Weather Information

77°, Partly Cloudy, Winds from NW at 15 mph

Contractors, Personnel, and Equipment On Site

Contractors: JB Holland Personnel: 5
Equipment: 2-John Deere 380G LC Excavators, 1-CAT D6N LGP Dozer, John Deere 624K Loader, Bobcat T770 Compact Track Loader, 2-CAT Dump Trucks, 1-ROME TAW-20S Wheel Offset Disc Harrow, 1-Bobcat E50 R2 Compact Excavator, 1-Fuel Truck, 1-CAT D6T LGP Dozer, 1-Water Truck, 1-CAT CP56B Compactor, 1-Hurricane HD3700 Drop Hammer, 1- John Deere 7800 Tractor, 1-Pull-behind sheepsfoot compactor with 7" pad length, 1 -John Deere 755D Crawler Loader, 1-John Deere 310 Disk, 1-ROME Disc, 2-Stoltz Truck-Mounted Site Spreaders, 1-CAT D6K2 LGP Dozer, 1-Challenger MT765D Crawler Tractor, 1-CAT Motor Grader

Work Areas/Boundaries

Existing Ash Pond

Testing Equipment Used/Observed and Calibration/Re-Calibration Documentation

Nuclear Density Gauge - Standard Calibration

Tests Completed/Observed

Two clay fill compaction tests completed.

Work Comments/Observations and Test Results

8:30 - The contractor continued excavation for the proposed separation berm. Excavated material was placed in the drying area on the east side of the existing ash pond.
8:30 - Clay fill was hauled to the site and placed at the top of the north sideslope. The dozer operator pushed clay to the south end of the separation berm to continue placement of the third lift.
11:30 - The contractor used a dozer to clean the pond floor in the northeast section of the proposed separation berm.
12:45 - SCS staff performed the standard calibration for the nuclear density gauge.
1:00 - Crew used a dozer to bail ash from the pond floor in the southeast corner of the existing ash pond.
1:00 - The contractor rolled the southern section of the separation berm with the pull-behind compactor. This area was then rolled with the self-propelled compactor.
1:05 - SCS staff assessed the section of pond floor in the northeast portion of the proposed separation berm to be cleared as clean. The area was determined to be clean.
1:30 - SCS surveyed the area that was cleared as clean.
2:00 - The contractor began placing another lift of clay fill in the northwest section of the separation berm.
2:30 - The contractor applied water to the perimeter roads for dust control.
3:20 - The contractor began pushing a lift of clay into the section of pond floor that was cleared as clean.
3:35 - The contractor rolled the northwest section of the separation berm with the pull-behind compactor. This area was then rolled with the self-propelled compactor.
4:15 - SCS performed compaction tests on the clay fill in the southeast section of the separation berm.
4:50 - The contractor rolled the lift of clay fill placed in the northeast section of the separation berm with the pull-behind compactor. This area was then rolled with the self-propelled compactor.
5:15 - The contractor used a dozer to clean a section of the north sideslope.
5:45 - SCS staff surveyed the portion of the north sideslope that was cleared.
6:00 - The contractor leveled the ash in the closure area with a dozer.
6:10 - SCS staff left the site.

Material(s) Delivered to Site

Clay Fill

Construction Observer

Chris Calhoun

SCS ENGINEERS

DAILY FIELD ACTIVITIES REPORT

Client Name:	Ames Municipal Electric System	**Date:**	August 9, 2024
SCS Engineers Project Name:	Ames Ash Pond Closure	**Start Time:**	8:00 AM
SCS Engineers Project No:	27219356.02	**Stop Time:**	2:50 PM
Project Location:	Ames Municipal Electric System Ash Ponds Ames, Iowa		

Task: *Ash Excavation, Ash Placement, Cement Application*

Weather Information

70°, Partly Cloudy, Winds from NW at 15 mph

Contractors, Personnel, and Equipment On Site

Contractors: JB Holland Personnel: 5
Equipment: 2-John Deere 380G LC Excavators, 1-CAT D6N LGP Dozer, John Deere 624K Loader, Bobcat T770 Compact Track Loader, 2-CAT Dump Trucks, 1-ROME TAW-20S Wheel Offset Disc Harrow, 1-Bobcat E50 R2 Compact Excavator, 1-Fuel Truck, 1-CAT D6T LGP Dozer, 1-Water Truck, 1-CAT CP56B Compactor, 1-Hurricane HD3700 Drop Hammer, 1- John Deere 7800 Tractor, 1-Pull-behind sheepsfoot compactor with 7" pad length, 1 -John Deere 755D Crawler Loader, 1-John Deere 310 Disk, 1-ROME Disc, 2-Stoltz Truck-Mounted Site Spreaders, 1-CAT D6K2 LGP Dozer, 1-Challenger MT765D Crawler Tractor, 1-CAT Motor Grader

Work Areas/Boundaries

Existing Ash Pond

Testing Equipment Used/Observed and Calibration/Re-Calibration Documentation

Nuclear Density Gauge - Standard Calibration

Tests Completed/Observed

Five clay fill compaction tests completed.

Work Comments/Observations and Test Results

8:00 - SCS staff performed the standard calibration for the nuclear density gauge.
8:00 - The contractor applied water to the perimeter roads for dust control.
8:10 - The contractor excavated ash near the southeast portion of the separation berm. Excavated material was hauled and placed in the closure area. The material was spread out in the closure area with a dozer.
8:20 - SCS performed compaction tests on the clay fill.
9:30 - The contractor used a dozer to place a second lift of clay fill in the northeast portion of the separation berm.
10:40 - The contractor rolled the second lift of clay fill in the northeastern portion of the separation berm with the pull-behind compactor. This area was then rolled with the self-propelled compactor.
11:45 - The contractor applied cement to the ash in the upper level of the closure area with a site spreader. A dozer pulled the site spreader through the closure area.
12:00 - The contractor started disking the cement into the ash in the upper level of the closure area.
12:10 - SCS performed a compaction test on the second lift of clay fill in the norrtheastern portion of the separation berm. The test passed.
12:20 - The contractor placed a third lift of clay fill in the northeast portion of the separation berm.
12:45 - The contractor rolled the third lift of clay fill in the northeastern portion of the separation berm with the pull-behind compactor. This area was then rolled with the self-propelled compactor.
1:00 - A dozer leveled out the clay fill to seal it up for the weekend.
1:45 - The contractor leveled out the ash in the upper level of the closure area with dozers.
1:55 - Crew used a skidloader to clean up the perimeter roads.
2:20 - The contractor applied cement to the ash in the lower level of the closure area. The cement was then immediately disked into the ash.
2:45 - The contractor finished applying cement to the ash in the lower level of the closure area and continued disking.
2:50 - SCS staff left the site.

Material(s) Delivered to Site

Cement

Construction Observer

Chris Calhoun

SCS ENGINEERS

DAILY FIELD ACTIVITIES REPORT

Client Name:	Ames Municipal Electric System	**Date:**	August 12, 2024
SCS Engineers Project Name:	Ames Ash Pond Closure	**Start Time:**	8:45 AM
SCS Engineers Project No:	27219356.02	**Stop Time:**	6:00 PM
Project Location:	Ames Municipal Electric System Ash Ponds Ames, Iowa		

Task: *Concrete Disposal, Cement Application, Dewatering*

Weather Information

68°, Cloudy with light rain throughout the day, Winds from E at 8 mph

Contractors, Personnel, and Equipment On Site

Contractors: JB Holland Personnel: 5
Equipment: 2-John Deere 380G LC Excavators, 1-CAT D6N LGP Dozer, John Deere 624K Loader, Bobcat T770 Compact Track Loader, 2-CAT Dump Trucks, 1-ROME TAW-20S Wheel Offset Disc Harrow, 1-Bobcat E50 R2 Compact Excavator, 1-Fuel Truck, 1-CAT D6T LGP Dozer, 1-Water Truck, 1-CAT CP56B Compactor, 1-Hurricane HD3700 Drop Hammer, 1- John Deere 7800 Tractor, 1-Pull-behind sheepsfoot compactor with 7" pad length, 1 -John Deere 755D Crawler Loader, 1-John Deere 310 Disk, 1-ROME Disc, 2-Stoltz Truck-Mounted Site Spreaders, 1-CAT D6K2 LGP Dozer, 1-Challenger MT765D Crawler Tractor, 1-CAT Motor Grader

Work Areas/Boundaries

Existing Ash Pond

Testing Equipment Used/Observed and Calibration/Re-Calibration Documentation

NA

Tests Completed/Observed

NA

Work Comments/Observations and Test Results

9:45 - The contractor used dozers to scrape off the top layer of wet material in the closure area after the morning rain.
10:15 - The contractor turned on the pumps to dewater the pond floor on the east and west sides of the separation berm.
10:15 - Crew used an excavator to move and level the ash material in the east drying area.
10:45 - Crew used a dozer to scrape off the top layer of wet clay fill on the separation berm. The material was piled on the south sideslope.
12:00 - The contractor used a dozer to level out the ash in the east drying area.
12:15 - The contractor used an excavator to create a trench in the closure area to dispose of the broken concrete from the portion of the concrete pad that was removed.
12:15 - Crew flattened the ash surface on the upper level of the closure area with a dozer. This was achieved by pushing material from the top of the mound to both the north and south.
12:45 - Crew began hauling the broken concrete to the closure area and dumping it next to the trench. The hoe operator began placing the broken concrete in the trench.
1:10 - The contractor used the self-propelled compactor to compact the areas that had been flattened.
1:45 - The contractor began backfilling the trench with ash material. The fill was compacted in approximately one foot lifts with the self-propelled compactor.
2:45 - The contractor continued flattening the upper level of the closure area with dozers. Crew continued rolling the flattened areas with the self-propelled compactor.
4:30 - The contractor performed a proof roll of the closure area. A majority of the upper level passed the proof roll, except for a couple isolated soft spots. The lower level of the closure area was too soft after the rain to pass the proof roll.
4:45 - The contractor cored out the material from the soft spots and pushed a new lift of ash into these areas. The areas were re-rolled with the self-propelled compactor.
5:15 - The contractor applied cement to the ash in the lower level of the closure area with a site spreader. A dozer pulled the site spreader through this area.
5:50 - The contractor started disking the cement into the ash in the lower level of the closure area.
6:00 - SCS staff left the site.

Material(s) Delivered to Site

25.5 Tons of Cement

Construction Observer

Chris Calhoun

SCS ENGINEERS

DAILY FIELD ACTIVITIES REPORT

Client Name:	Ames Municipal Electric System	**Date:**	August 13, 2024
SCS Engineers Project Name:	Ames Ash Pond Closure	**Start Time:**	8:00 AM
SCS Engineers Project No:	27219356.02	**Stop Time:**	4:15 PM
Project Location:	Ames Municipal Electric System Ash Ponds Ames, Iowa		

Task: *Ash Excavation, Ash Placement, Cleaned Excavation Clearing, Cement Application*

Weather Information

73°, Cloudy, Winds from SE at 10 mph

Contractors, Personnel, and Equipment On Site

Contractors: JB Holland Personnel: 5
Equipment: 2-John Deere 380G LC Excavators, 1-CAT D6N LGP Dozer, John Deere 624K Loader, Bobcat T770 Compact Track Loader, 2-CAT Dump Trucks, 1-ROME TAW-20S Wheel Offset Disc Harrow, 1-Bobcat E50 R2 Compact Excavator, 1-Fuel Truck, 1-CAT D6T LGP Dozer, 1-Water Truck, 1-CAT CP56B Compactor, 1-Hurricane HD3700 Drop Hammer, 1- John Deere 7800 Tractor, 1-Pull-behind sheepsfoot compactor with 7" pad length, 1 -John Deere 755D Crawler Loader, 1-John Deere 310 Disk, 1-ROME Disc, 2-Stoltz Truck-Mounted Site Spreaders, 1-CAT D6K2 LGP Dozer, 1-Challenger MT765D Crawler Tractor, 1-CAT Motor Grader

Work Areas/Boundaries

Existing Ash Pond

Testing Equipment Used/Observed and Calibration/Re-Calibration Documentation

NA

Tests Completed/Observed

NA

Work Comments/Observations and Test Results

8:00 - The contractor excavated ash near the southeast portion of the separation berm. Excavated material was hauled and placed in the closure area. The material was spread out in the closure area with a dozer.
9:00 - Weekly construction progress meeting.
10:45 - The contractor applied cement to the ash in the lower level of the closure area with a site spreader. A dozer pulled the site spreader through the closure area.
11:00 - The contractor used a dozer to clean the pond floor near the southeastern portion of the separation berm.
12:00 - The contractor cleaned a portion of the south sideslope on the east side of the proposed separation berm. While cleaning the sideslope, a small circular area (~1 foot diameter) containing pea gravel and some larger aggregate was discovered. A similar area was previously discovered further west on the sideslope.
12:15 - SCS staff assessed the section of pond floor and sideslope near the southeast portion of the proposed separation berm to be cleared as clean. After some additional cleaning on the south sideslope, the area was determined to be clean.
12:30 - The contractor disked the cement into the ash in the lower level of the closure area.
12:40 - SCS surveyed the area that was cleared as clean.
1:10 - The contractor applied cement to the ash in the upper level of the closure area with a site spreader.
1:45 - The contractor disked the cement into the ash in the upper level of the closure area.
2:30 - Crew used a dozer to level and seal up the clay on the separation berm to prepare for predicted rain.
3:45 - The contractor applied cement to the remainder of the ash in the upper level of the closure area. Crew then disked the cement into the ash.
4:00 - The contractor used a dozer to smooth out the ash in the lower level of the closure area.
4:15 - SCS staff left the site.

Material(s) Delivered to Site

Cement

Construction Observer

Chris Calhoun

SCS ENGINEERS

DAILY FIELD ACTIVITIES REPORT

Client Name:	Ames Municipal Electric System	**Date:**	August 19, 2024
SCS Engineers Project Name:	Ames Ash Pond Closure	**Start Time:**	8:00 AM
SCS Engineers Project No:	27219356.02	**Stop Time:**	5:30 PM
Project Location:	Ames Municipal Electric System Ash Ponds Ames, Iowa		

Task: *Clay Fill Import, Separation Berm, Ash Placement, Clay Compaction Testing*

Weather Information

80°, Sunny, Winds from N at 10 mph

Contractors, Personnel, and Equipment On Site

Contractors: JB Holland Personnel: 6
Equipment: 2-John Deere 380G LC Excavators, 1-CAT D6N LGP Dozer, John Deere 624K Loader, Bobcat T770 Compact Track Loader, 2-CAT Dump Trucks, 1-ROME TAW-20S Wheel Offset Disc Harrow, 1-Bobcat E50 R2 Compact Excavator, 1-Fuel Truck, 1-CAT D6T LGP Dozer, 1-Water Truck, 1-CAT CP56B Compactor, 1-Hurricane HD3700 Drop Hammer, 1- John Deere 7800 Tractor, 1-Pull-behind sheepsfoot compactor with 7" pad length, 1 -John Deere 755D Crawler Loader, 1-John Deere 310 Disk, 1-ROME Disc, 1-Stoltz Truck-Mounted Site Spreader, 1-CAT D6K2 LGP Dozer, 1-Challenger MT765D Crawler Tractor, 1-CAT 140M Motor Grader

Work Areas/Boundaries

Existing Ash Pond

Testing Equipment Used/Observed and Calibration/Re-Calibration Documentation

Nuclear Density Gauge - Standard Calibration

Tests Completed/Observed

Two clay compaction tests performed with the nuclear density gauge.

Work Comments/Observations and Test Results

8:00 - Clay fill was delivered to the site and was stockpiled at the top of the north sideslope. The contractor placed a lift of clay in the northeast portion of the separation berm.
8:30 - The contractor rolled the clay fill with the pull-behind compactor.
8:30 - The contractor used a pump to dewater the pond floor on the east side of the separation berm.
8:30 - The contractor used a dozer to smooth out the ash in the closure area.
9:15 - Water was applied to the perimeter roads for dust control. Water was applied to the roads periodically throughout the day.
10:00 - SCS performed the standard calibration for the nuclear density gauge.
10:00 - The contractor rolled the closure area with the pull-behind compactor.
11:00 - The contractor performed a proof roll in the closure area with a loaded dumptruck. The proof roll passed.
11:00 - The contractor created a ramp on the south sideslope with clay fill allowing the road haul trucks to drive across the top of the separation berm to stockpile clay prior to placement.
11:30 - Crew rolled the northeast portion of the separation berm with the pull-behind compactor. This area was then rolled with the self-propelled compactor.
11:30 - The contractor used a dozer to place another lift of clay fill on the south side of the separation berm.
1:00 - Crew rolled the south side of the separation berm with the pull-behind compactor.
1:10 - Clay trucks started using the ramp on the south sideslope and stockpiled clay fill directly on the top of the separation berm.
1:30 - The contractor started spreading out another lift of clay fill on the north side of the separation berm.
1:30 - The contractor began hauling stockpiled ash material from the east side of the existing ash pond to the closure area. The material was spread out in the closure area with a dozer.
1:40 - Crew rolled the south side of the separation berm with the self-propelled compactor.
2:40 - SCS performed two clay compaction tests on the south side of the separation berm with the nuclear density gauge.
3:00 - The contractor continued spreading out a lift of clay fill on the separation berm.
5:30 - SCS staff left the site.

Material(s) Delivered to Site

Clay Fill

Construction Observer

Chris Calhoun

SCS ENGINEERS

DAILY FIELD ACTIVITIES REPORT

Client Name:	Ames Municipal Electric System	**Date:**	August 20, 2024
SCS Engineers Project Name:	Ames Ash Pond Closure	**Start Time:**	8:00 AM
SCS Engineers Project No:	27219356.02	**Stop Time:**	5:30 PM
Project Location:	Ames Municipal Electric System Ash Ponds Ames, Iowa		

Task: *Clay Fill Import, Separation Berm Construction, Ash Conditioning, Clay Compaction Testing*

Weather Information

78°, Cloudy, Winds from S at 5 mph

Contractors, Personnel, and Equipment On Site

Contractors: JB Holland Personnel: 6
Equipment: 2-John Deere 380G LC Excavators, 1-CAT D6N LGP Dozer, John Deere 624K Loader, Bobcat T770 Compact Track Loader, 2-CAT Dump Trucks, 1-ROME TAW-20S Wheel Offset Disc Harrow, 1-Bobcat E50 R2 Compact Excavator, 1-Fuel Truck, 1-CAT D6T LGP Dozer, 1-Water Truck, 1-CAT CP56B Compactor, 1-Hurricane HD3700 Drop Hammer, 1- John Deere 7800 Tractor, 1-Pull-behind sheepsfoot compactor with 7" pad length, 1 -John Deere 755D Crawler Loader, 1-John Deere 310 Disk, 1-ROME Disc, 1-Stoltz Truck-Mounted Site Spreader, 1-CAT D6K2 LGP Dozer, 1-Challenger MT765D Crawler Tractor, 1-CAT 140M Motor Grader

Work Areas/Boundaries

Existing Ash Pond

Testing Equipment Used/Observed and Calibration/Re-Calibration Documentation

Nuclear Density Gauge - Standard Calibration

Tests Completed/Observed

Five clay compaction tests performed with the nuclear density gauge.

Work Comments/Observations and Test Results

8:00 - SCS performed the standard calibration for the nuclear density gauge.
8:00 - Clay fill was delivered to the site and was stockpiled directly on the separation berm.
8:00 - The contractor continued placing a lift of ash in the lower level of the closure area.
8:00 - The contractor rolled the west side of the separation berm with the pull-behind compactor. This area was then rolled with the self-propelled compactor.
9:20 - SCS performed three clay compaction tests on the west side of the separation berm with the nuclear density gauge.
9:30 - The contractor disked the clay fill in the central portion of the separation berm.
10:20 - The contractor disked the ash in the lower level of the closure area.
10:30 - The contractor used an excavator to work the ash in the drying area on the east side of the existing ash pond.
10:30 - Crew disked the ash in the drying area on the east side of the existing ash pond.
1:10 - The contractor rolled the central portion of the separation berm with the pull-behind compactor. This area was then rolled with the self-propelled compactor.
2:10 - The contractor rolled the east side of the separation berm with the pull-behind compactor. This area was then rolled with the self-propelled compactor.
2:30 - The dozer operator began placing another lift of clay fill on the west side of the separation berm.
2:45 - Crew disked the ash in the drying area on the east side of the existing ash pond.
3:15 - The contractor disked the ash in the closure area.
3:30 - SCS performed two clay compaction tests on the east side of the separation berm with the nuclear density gauge.
4:00 - The contractor disked the clay fill in the southeast portion of the separation berm where a compaction test had failed.
5:15 - The contractor rolled the southeast portion of the separation berm with the pull-behind compactor. This area was then rolled with the self-propelled compactor.
5:15 - Crew disked the clay fill on the west side of the separation berm.
5:30 - SCS staff left the site.

Material(s) Delivered to Site

Clay Fill

Construction Observer

Chris Calhoun

SCS ENGINEERS

DAILY FIELD ACTIVITIES REPORT

Client Name:	Ames Municipal Electric System	**Date:**	August 21, 2024
SCS Engineers Project Name:	Ames Ash Pond Closure	**Start Time:**	7:30 AM
SCS Engineers Project No:	27219356.02	**Stop Time:**	6:50 PM
Project Location:	Ames Municipal Electric System Ash Ponds Ames, Iowa		

Task: *Clay Fill Import, Separation Berm Construction, Ash Conditioning, Clay Compaction Testing*

Weather Information

75°, Sunny, Winds from SE at 10 mph

Contractors, Personnel, and Equipment On Site

Contractors: JB Holland Personnel: 6
Equipment: 2-John Deere 380G LC Excavators, 1-CAT D6N LGP Dozer, John Deere 624K Loader, Bobcat T770 Compact Track Loader, 2-CAT Dump Trucks, 1-ROME TAW-20S Wheel Offset Disc Harrow, 1-Bobcat E50 R2 Compact Excavator, 1-Fuel Truck, 1-CAT D6T LGP Dozer, 1-Water Truck, 1-CAT CP56B Compactor, 1-Hurricane HD3700 Drop Hammer, 1- John Deere 7800 Tractor, 1-Pull-behind sheepsfoot compactor with 7" pad length, 1-Pull-behind sheepsfoot compactor with 8" pad length, 1 -John Deere 755D Crawler Loader, 1-John Deere 310 Disk, 1-ROME Disc, 1-Stoltz Truck-Mounted Site Spreader, 1-CAT D6K2 LGP Dozer, 1-Challenger MT765D Crawler Tractor, 1-CAT 140M Motor Grader, 1-Case IH MX270 Tractor, 1-Homes Rollerblade 11M

Work Areas/Boundaries

Existing Ash Pond

Testing Equipment Used/Observed and Calibration/Re-Calibration Documentation

Nuclear Density Gauge - Standard Calibration

Tests Completed/Observed

Eight clay compaction tests performed with the nuclear density gauge.

Work Comments/Observations and Test Results

7:30 - SCS performed the standard calibration for the nuclear density gauge.
7:45 - Clay fill was delivered to the site and was stockpiled directly on the separation berm.
7:45 - The contractor disked the ash in the closure area.
7:45 - Crew disked the clay fill on the western half of the separation berm.
7:45 - The contractor used a dozer to spread and work the ash in the drying area on the east side of the existing ash pond.
8:10 - The contractor rolled the western half of the separation berm with the pull-behind compactor. This area was then rolled with the self-propelled compactor.
8:30 - SCS performed a clay compaction test on the southeast side of the separation berm.
8:45 - The contractor disked the ash in the drying area on the east side of the existing ash pond. The contractor alternated between disking this area and the closure area for a majority of the day.
9:35 - SCS obtained a sample of the clay fill onsite.
9:40 - The contractor excavated ash along the east sideslope in the southeast corner of the existing ash pond.
10:15 - SCS performed three clay compaction tests on the western half of the separation berm with the nuclear density gauge.
10:15 - The contractor used a dozer to flatten the top of the ash mound on the west side of the closure area. The dozer operator also created a ramp for a dumptruck to access the top of the mound.
11:00 - The dozer operator began placing another lift of clay fill on the west side of the separation berm.
11:20 - Crew disked the clay fill on the eastern half of the separation berm.
11:40 - The contractor began hauling the excavated material from the southeast corner of the existing ash pond and placing it on top of the mound on the west side of the closure area.
12:15 - The contractor rolled the eastern half of the separation berm with the pull-behind compactor. This area was then rolled with the self-propelled compactor.
2:00 - SCS performed two clay compaction tests on the eastern half of the separation berm with the nuclear density gauge.
2:30 - The dozer operator began placing another lift of clay fill on the east side of the separation berm.
3:30 - Crew disked the clay fill on the western half of the separation berm. This area was then rolled with the pull-behind and self-propelled compactor.
5:45 - The contractor used a motor grader to level out the north perimeter access road.
5:45 - The dozer operator worked on grading the side slopes for the separation berm.
6:30 - SCS performed two clay compaction tests on the western half of the separation berm with the nuclear density gauge.
6:50 - SCS staff left the site.

Material(s) Delivered to Site

Clay Fill

Construction Observer

Chris Calhoun

SCS ENGINEERS

DAILY FIELD ACTIVITIES REPORT

Client Name:	Ames Municipal Electric System	**Date:**	August 22, 2024
SCS Engineers Project Name:	Ames Ash Pond Closure	**Start Time:**	8:40 AM
SCS Engineers Project No:	27219356.02	**Stop Time:**	7:10 PM
Project Location:	Ames Municipal Electric System Ash Ponds Ames, Iowa		

Task: *Clay Fill Import, Separation Berm Construction, Ash Conditioning, Clay Compaction Testing*

Weather Information

78°, Sunny, Winds from SE at 10 mph

Contractors, Personnel, and Equipment On Site

Contractors: JB Holland Personnel: 6
Equipment: 2-John Deere 380G LC Excavators, 1-CAT D6N LGP Dozer, John Deere 624K Loader, Bobcat T770 Compact Track Loader, 2-CAT Dump Trucks, 1-ROME TAW-20S Wheel Offset Disc Harrow, 1-Bobcat E50 R2 Compact Excavator, 1-Fuel Truck, 1-CAT D6T LGP Dozer, 1-Water Truck, 1-CAT CP56B Compactor, 1-Hurricane HD3700 Drop Hammer, 1- John Deere 7800 Tractor, 1-Pull-behind sheepsfoot compactor with 7" pad length, 1-Pull-behind sheepsfoot compactor with 8" pad length, 1 -John Deere 755D Crawler Loader, 1-John Deere 310 Disk, 1-ROME Disc, 1-Stoltz Truck-Mounted Site Spreader, 1-CAT D6K2 LGP Dozer, 1-Challenger MT765D Crawler Tractor, 1-CAT 140M Motor Grader, 1-Case IH MX270 Tractor, 1-Homes Rollerblade 11M

Work Areas/Boundaries

Existing Ash Pond

Testing Equipment Used/Observed and Calibration/Re-Calibration Documentation

Nuclear Density Gauge - Standard Calibration

Tests Completed/Observed

Eight clay compaction tests performed with the nuclear density gauge.

Work Comments/Observations and Test Results

8:40 - SCS performed the standard calibration for the nuclear density gauge.
8:45 - The dozer operator spread out a lift of clay fill on the west side of the separation berm. Crew disked the clay fill on the eastern half of the separation berm.
8:55 - The contractor excavated ash along the east sideslope in the southeast corner of the existing ash pond. The excavated material was hauled to the top of the mound on the west side of the closure area.
9:10 - The contractor disked the ash in the closure area.
9:45 - The contractor disked the ash in the east drying area. The contractor alternated between disking this area and the closure area for a majority of the day.
10:00 - The contractor used a dozer to work the ash in the drying area on the east side of the existing ash pond.
11:00 - The contractor rolled the eastern half of the separation berm with the pull-behind compactor. This area was then rolled with the self-propelled compactor.
12:10 - SCS performed three clay compaction tests on the east side of the separation berm.
1:00 - The contractor excavated ash to the north of the existing pond outlet. Material continued to be hauled to the top of the mound on the west side of the closure area.
1:30 - Crew rolled the upper level of the closure area with the pull-behind compactor.
2:45 - Crew disked the clay fill on the separation berm. The clay fill was disked several times over the next couple of hours.
3:20 - The contractor performed a proof roll of the upper level of the closure area. Rutting in most areas was between 1" to 6" with the dump truck easily traversing the surface. One area on the northern side of the closure area had rutting exceeding 12" where the truck struggled to move through the ash.
4:10 - The contractor placed another lift of ash on the upper level of the closure area. The placed material was excavated from the east containment pit in the drying area on the east side of the existing ash pond.
5:40 - The contractor rolled the separation berm with the pull-behind compactor. This area was then rolled with the self-propelled compactor.
6:30 - SCS performed five clay compaction tests on the separation berm.
7:10 - SCS staff left the site.

Material(s) Delivered to Site

Clay Fill

Construction Observer

Chris Calhoun

SCS ENGINEERS

DAILY FIELD ACTIVITIES REPORT

Client Name:	Ames Municipal Electric System	**Date:**	August 23, 2024
SCS Engineers Project Name:	Ames Ash Pond Closure	**Start Time:**	9:00 AM
SCS Engineers Project No:	27219356.02	**Stop Time:**	3:25 PM
Project Location:	Ames Municipal Electric System Ash Ponds Ames, Iowa		

Task: *Clay Fill Import, Separation Berm Construction, Ash Conditioning, Clay Compaction Testing*

Weather Information

81°, Sunny, Winds from SE at 10 mph

Contractors, Personnel, and Equipment On Site

Contractors: JB Holland Personnel: 6
Equipment: 2-John Deere 380G LC Excavators, 1-CAT D6N LGP Dozer, John Deere 624K Loader, Bobcat T770 Compact Track Loader, 2-CAT Dump Trucks, 1-ROME TAW-20S Wheel Offset Disc Harrow, 1-Bobcat E50 R2 Compact Excavator, 1-Fuel Truck, 1-CAT D6T LGP Dozer, 1-Water Truck, 1-CAT CP56B Compactor, 1-Hurricane HD3700 Drop Hammer, 1- John Deere 7800 Tractor, 1-Pull-behind sheepsfoot compactor with 7" pad length, 1-Pull-behind sheepsfoot compactor with 8" pad length, 1 -John Deere 755D Crawler Loader, 1-John Deere 310 Disk, 1-ROME Disc, 1-Stoltz Truck-Mounted Site Spreader, 1-CAT D6K2 LGP Dozer, 1-Challenger MT765D Crawler Tractor, 1-CAT 140M Motor Grader, 1-Case IH MX270 Tractor, 1-Homes Rollerblade 11M

Work Areas/Boundaries

Existing Ash Pond

Testing Equipment Used/Observed and Calibration/Re-Calibration Documentation

Nuclear Density Gauge - Standard Calibration

Tests Completed/Observed

Ten clay compaction tests performed with the nuclear density gauge.

Work Comments/Observations and Test Results

9:00 - The dozer operator placed a lift of clay fill on the east side of the separation berm. Crew disked the clay fill on the west side of the separation berm.
9:00 - The contractor excavated dry ash material from the mound on the west side of the closure area and spread it over the ash material in the low area on the far north side of the closure area.
9:45 - Crew rolled the western half of the separation berm with two pull-behind compactors. This area was then rolled with the self-propelled compactor.
10:00 - The contractor used a dozer to clean off the east sideslope in the southeast corner of the existing ash pond.
11:00 - SCS performed three clay compaction tests on the west side of the separation berm.
11:25 - The dozer operator spread out another lift of clay fill on the west side of the separation berm.
11:25 - The contractor placed another lift of ash in the lower level of the closure area. The placed material was excavated from the east containment pit in the drying area on the east side of the existing ash pond.
12:30 - Crew disked the clay fill on the east side of the separation berm.
12:50 - Crew disked the clay fill on the west side of the separation berm.
1:15 - The contractor disked the ash in the closure area.
1:45 - The contractor rolled the separation berm with the pull-behind compactor. This area was then rolled with the self-propelled compactor.
2:30 - SCS performed clay compaction tests on the separation berm.
3:00 - The contractor left the site.
3:25 - SCS staff left the site.

Material(s) Delivered to Site

Clay Fill

Construction Observer

Chris Calhoun

SCS ENGINEERS

DAILY FIELD ACTIVITIES REPORT

Client Name:	Ames Municipal Electric System	**Date:**	August 26, 2024
SCS Engineers Project Name:	Ames Ash Pond Closure	**Start Time:**	8:50 AM
SCS Engineers Project No:	27219356.02	**Stop Time:**	5:30 PM
Project Location:	Ames Municipal Electric System Ash Ponds Ames, Iowa		

Task: *Clay Fill Import, Separation Berm Construction, Ash Conditioning, Clay Compaction Testing*

Weather Information

97°, Sunny, Winds from S at 7 mph

Contractors, Personnel, and Equipment On Site

Contractors: JB Holland Personnel: 6
Equipment: 2-John Deere 380G LC Excavators, 1-CAT D6N LGP Dozer, John Deere 624K Loader, Bobcat T770 Compact Track Loader, 2-CAT Dump Trucks, 1-ROME TAW-20S Wheel Offset Disc Harrow, 1-Bobcat E50 R2 Compact Excavator, 1-Fuel Truck, 1-CAT D6T LGP Dozer, 1-Water Truck, 1-CAT CP56B Compactor, 1-Hurricane HD3700 Drop Hammer, 1- John Deere 7800 Tractor, 1-Pull-behind sheepsfoot compactor with 7" pad length, 1-Pull-behind sheepsfoot compactor with 8" pad length, 1 -John Deere 755D Crawler Loader, 1-John Deere 310 Disk, 1-ROME Disc, 1-Stoltz Truck-Mounted Site Spreader, 1-CAT D6K2 LGP Dozer, 1-Challenger MT765D Crawler Tractor, 1-CAT 140M Motor Grader, 1-Case IH MX270 Tractor, 1-Homes Rollerblade 11M

Work Areas/Boundaries

Existing Ash Pond

Testing Equipment Used/Observed and Calibration/Re-Calibration Documentation

Nuclear Density Gauge - Standard Calibration

Tests Completed/Observed

Twelve clay compaction tests performed with the nuclear density gauge.

Work Comments/Observations and Test Results

8:50 - SCS performed the standard calibration for the nuclear density gauge.
9:00 - Clay fill started being delivered to the site and was stockpiled directly on the separation berm. Contractor began disking.
9:15 - Contractyor began compacting north side seperation berm with self propelled compactor.
10:45 - Contractor began working ash on East side containment area with dozer.
11:00 - Contractor disked clay and compacted the eastern portion of seperation berm.
11:53 - Contractor disking closure area, and hauled ash material from east containment area to the closure area.
2:00 - Contractor graded more clay from seperation berm, and disked east conatinment area.
3:30 - Contractor rerolled test area of separation berm.
5:00 - 3 moisture-density tests were performed.
5:30 - SCS left site. The contractor continued placing clay to be compacted and tested next morning.

Material(s) Delivered to Site

Clay Fill

Construction Observer

Chris Calhoun/Isaac Creech

SCS ENGINEERS

DAILY FIELD ACTIVITIES REPORT

Client Name:	Ames Municipal Electric System	**Date:**	August 27, 2024
SCS Engineers Project Name:	Ames Ash Pond Closure	**Start Time:**	7:45AM
SCS Engineers Project No:	27219356.02	**Stop Time:**	4:45 PM
Project Location:	Ames Municipal Electric System Ash Ponds Ames, Iowa		

Task: *Clay Fill Import, Separation Berm Construction, Ash Conditioning, Clay Compaction Testing*

Weather Information

87°, Sunny, Winds from S at 7 mph

Contractors, Personnel, and Equipment On Site

Contractors: JB Holland Personnel: 6
Equipment: 2-John Deere 380G LC Excavators, 1-CAT D6N LGP Dozer, John Deere 624K Loader, Bobcat T770 Compact Track Loader, 2-CAT Dump Trucks, 1-ROME TAW-20S Wheel Offset Disc Harrow, 1-Bobcat E50 R2 Compact Excavator, 1-Fuel Truck, 1-CAT D6T LGP Dozer, 1-Water Truck, 1-CAT CP56B Compactor, 1-Hurricane HD3700 Drop Hammer, 1- John Deere 7800 Tractor, 1-Pull-behind sheepsfoot compactor with 7" pad length, 1-Pull-behind sheepsfoot compactor with 8" pad length, 1 -John Deere 755D Crawler Loader, 1-John Deere 310 Disk, 1-ROME Disc, 1-Stoltz Truck-Mounted Site Spreader, 1-CAT D6K2 LGP Dozer, 1-Challenger MT765D Crawler Tractor, 1-CAT 140M Motor Grader, 1-Case IH MX270 Tractor, 1-Homes Rollerblade 11M

Work Areas/Boundaries

Existing Ash Pond

Testing Equipment Used/Observed and Calibration/Re-Calibration Documentation

Nuclear Density Gauge - Standard Calibration

Tests Completed/Observed

Seven clay compaction tests performed with the nuclear density gauge.

Work Comments/Observations and Test Results

7:45 - SCS arrived onsite, performed standard count for NDG. Required 1 retest.
8:00 - Clay trucks began delivery, SCS began 3 NDG tests on west side of seperation berm lift 12.
8:30 - Completed 3 passing NDG tests on west side of seperation berm lift 12.
9:45 - Contractor disked east side of separation berm, and compacted the ash in the closure area.
10:15 - Contractor performed a proof roll, which was observed by Matt Kuhlenengel (SCS) and Isaac Creech (SCS). Ash required recompacting of three small areas.
10:30 - Contractor disked areas that failed proof roll.
11:15 - SCS performed NDG testing of ash in areas that passed proof roll. This was done for informational purposes only and was not recorded.
11:30 - Contractor performed dust control of roads.
12:00 - Contractor disked east containment area and east side of separation berm.
12:45 - Contractor moved ash from east containment area to parts of closure area cleared in proof roll.
2:15 - Contractor disked east closure area.
2:35 - Contractor began rolling east side of seperation berm for lift 12 and conducted dust control activities.
3:30 - SCS performed 2 NDG tests, 1 passed, 1 failed.
3:45 - SCS performed NDG retest, full lift 12 passed.
4:00 - Retest proof roll for West section of closure area, passed. Still need to complete proof roll for north and east area. Additional informational ash NDG tests were performed.
4:45 - SCS left site.

Material(s) Delivered to Site

Clay Fill

Construction Observer

Isaac Creech

SCS ENGINEERS

DAILY FIELD ACTIVITIES REPORT

Client Name:	Ames Municipal Electric System	**Date:**	August 28, 2024
SCS Engineers Project Name:	Ames Ash Pond Closure	**Start Time:**	8:00AM
SCS Engineers Project No:	27219356.02	**Stop Time:**	4:30 PM
Project Location:	Ames Municipal Electric System Ash Ponds Ames, Iowa		

Task: *Clay Fill Import, Separation Berm Construction, Ash Conditioning, Clay Compaction Testing*

Weather Information

87°, Sunny, Winds from S at 7 mph

Contractors, Personnel, and Equipment On Site

Contractors: JB Holland Personnel: 6
Equipment: 2-John Deere 380G LC Excavators, 1-CAT D6N LGP Dozer, John Deere 624K Loader, Bobcat T770 Compact Track Loader, 2-CAT Dump Trucks, 1-ROME TAW-20S Wheel Offset Disc Harrow, 1-Bobcat E50 R2 Compact Excavator, 1-Fuel Truck, 1-CAT D6T LGP Dozer, 1-Water Truck, 1-CAT CP56B Compactor, 1-Hurricane HD3700 Drop Hammer, 1- John Deere 7800 Tractor, 1-Pull-behind sheepsfoot compactor with 7" pad length, 1-Pull-behind sheepsfoot compactor with 8" pad length, 1 -John Deere 755D Crawler Loader, 1-John Deere 310 Disk, 1-ROME Disc, 1-Stoltz Truck-Mounted Site Spreader, 1-CAT D6K2 LGP Dozer, 1-Challenger MT765D Crawler Tractor, 1-CAT 140M Motor Grader, 1-Case IH MX270 Tractor, 1-Homes Rollerblade 11M

Work Areas/Boundaries

Existing Ash Pond

Testing Equipment Used/Observed and Calibration/Re-Calibration Documentation

Nuclear Density Gauge - Standard Calibration

Tests Completed/Observed

Fourteen clay compaction tests performed with the nuclear density gauge.

Work Comments/Observations and Test Results

8:00 - SCS arrived onsite, performed standard count for NDG. Required 1 retest.
8:15 - Clay trucks began delivery, SCS began 5 NDG tests on seperation berm lift 13.
9:00 - SCS completed 5 passing NDG tests on west side of seperation berm lift 13.
9:30 - Contractor disked closure area that did not pass proof roll on 8/27.
10:30 - Work stopped due to Elder clay truck tipping over.
11:30 - Clay trucks rerouted to north section of seperation berm, truck turned upright and inspected for damage.
11:50 - Contractor began rolling lift 14 on separation berm with pull behind roller.
12:00 - Contractor performed dust control, and disked closure area
12:30 - SCS perforemd 5 NDG tests, 4 pass 1 fail.
12:45 - Contractor recompacted grid of failed NDG test.
1:00 - Retest of failed NDG test, failed again. Contractor recompacted again.
1:30 - NDG test passed, lift 14 passed in full.
1:45 - Contractor began ash excavation and disking of east containment area.
3:00 - Contractor rolled and compacted lift 15.
3:15 - Contractor excavated ash and filled dump truck for proof roll.
3:30 - SCS performed 2 NDG tests on lift 15, west side of separation berm, both passed.
3:45 - Proof roll passed on low area, contractor began hauling ash to area cleared in proof roll.
4:30 - SCS left the site.

Material(s) Delivered to Site

Clay Fill

Construction Observer

Isaac Creech

SCS ENGINEERS

DAILY FIELD ACTIVITIES REPORT

Client Name:	Ames Municipal Electric System	**Date:**	August 29, 2024
SCS Engineers Project Name:	Ames Ash Pond Closure	**Start Time:**	7:15AM
SCS Engineers Project No:	27219356.02	**Stop Time:**	3:30 PM
Project Location:	Ames Municipal Electric System Ash Ponds Ames, Iowa		

Task: *Clay Fill Import, Separation Berm Construction, Ash Conditioning, Clay Compaction Testing*

Weather Information

8°, Sunny, Winds from S at 6 mph

Contractors, Personnel, and Equipment On Site

Contractors: JB Holland Personnel: 6
Equipment: 2-John Deere 380G LC Excavators, 1-CAT D6N LGP Dozer, John Deere 624K Loader, Bobcat T770 Compact Track Loader, 2-CAT Dump Trucks, 1-ROME TAW-20S Wheel Offset Disc Harrow, 1-Bobcat E50 R2 Compact Excavator, 1-Fuel Truck, 1-CAT D6T LGP Dozer, 1-Water Truck, 1-CAT CP56B Compactor, 1-Hurricane HD3700 Drop Hammer, 1- John Deere 7800 Tractor, 1-Pull-behind sheepsfoot compactor with 7" pad length, 1-Pull-behind sheepsfoot compactor with 8" pad length, 1 -John Deere 755D Crawler Loader, 1-John Deere 310 Disk, 1-ROME Disc, 1-Stoltz Truck-Mounted Site Spreader, 1-CAT D6K2 LGP Dozer, 1-Challenger MT765D Crawler Tractor, 1-CAT 140M Motor Grader, 1-Case IH MX270 Tractor, 1-Homes Rollerblade 11M

Work Areas/Boundaries

Existing Ash Pond

Testing Equipment Used/Observed and Calibration/Re-Calibration Documentation

Nuclear Density Gauge - Standard Calibration

Tests Completed/Observed

Nineteen clay compaction tests performed with the nuclear density gauge.

Work Comments/Observations and Test Results

7:15 - SCS performed the standard calibration for the NDG.
7:30 - Contractor disked ash placed in closure area.
7:45 - SCS performed 3 NDG tests, all passed. Lift 15 complete. Clay trucks begin delivery.
8:15 - Contractor began grading lift 16 on seperation berm.
8:30 - SCS used survey equipment/checked with dozer operator to confirm elevation/lift count.
9:30 - Contractor disked ash in east containment area.
10:34 - Confirmed change in material, clay trucks paused for 1 hour.
11:15 - Contractor compacted lift 16 on separation berm and disked ash in closure area.
12:00 - SCS performed 5 NDG tests on separation berm lift 16, 5 passed.
12:30 - Contractor compacted ash on closure area, preparing to deposit a new 6" lift on low closure area.
12:45 - Contractor began grading slope at north/south side of separation berm.
1:30 - SCS performed 5 NDG tests, 3 passed 2 failed. Contractor regraded areas of failing NDG tests.
2:00 - SCS perfromed 2 NDG retests, both passed.
2:30 - Contractor performed dust control and disked east containment area.
3:00 - Contractor disked closure area and compacted separation berm.
3:15 - SCS performed 3 NDG tests, 2 passed 1 failed for lift 18.
3:30 - SCS left site to deliver soil sample.

Material(s) Delivered to Site

Clay Fill

Construction Observer

Isaac Creech

SCS ENGINEERS

DAILY FIELD ACTIVITIES REPORT

Client Name:	Ames Municipal Electric System	**Date:**	September 3, 2024
SCS Engineers Project Name:	Ames Ash Pond Closure	**Start Time:**	8:30 AM
SCS Engineers Project No:	27219356.02	**Stop Time:**	6:20 PM
Project Location:	Ames Municipal Electric System Ash Ponds Ames, Iowa		

Task: *Clay Fill Import, Separation Berm Construction, Ash Conditioning, Clay Compaction Testing*

Weather Information

77°, Sunny, Winds from SE at 14 mph

Contractors, Personnel, and Equipment On Site

Contractors: JB Holland Personnel: 6
Equipment: 2-John Deere 380G LC Excavators, 1-CAT D6N LGP Dozer, John Deere 624K Loader, Bobcat T770 Compact Track Loader, 2-CAT Dump Trucks, 1-ROME TAW-20S Wheel Offset Disc Harrow, 1-Bobcat E50 R2 Compact Excavator, 1-Fuel Truck, 1-CAT D6T LGP Dozer, 1-Water Truck, 1-CAT CP56B Compactor, 1-Hurricane HD3700 Drop Hammer, 1- John Deere 7800 Tractor, 1-Pull-behind sheepsfoot compactor with 7" pad length, 1-Pull-behind sheepsfoot compactor with 8" pad length, 1 -John Deere 755D Crawler Loader, 1-John Deere 310 Disk, 1-ROME Disc, 1-Stoltz Truck-Mounted Site Spreader, 1-CAT D6K2 LGP Dozer, 1-Challenger MT765D Crawler Tractor, 1-CAT 140M Motor Grader, 1-Case IH MX270 Tractor, 1-Homes Rollerblade 11M

Work Areas/Boundaries

Existing Ash Pond

Testing Equipment Used/Observed and Calibration/Re-Calibration Documentation

Nuclear Density Gauge - Standard Calibration

Tests Completed/Observed

Ten clay compaction tests performed with the nuclear density gauge.

Work Comments/Observations and Test Results

8:30 - Clay trucks delivered clay to the site and stockpiled directly onto the separation berm. This continued for a majority of the day.
9:00 - SCS performed the standard calibration for the nuclear density gauge.
10:00 - SCS performed three clay compaction tests on the separation berm.
10:00 - Crew disked the ash in the closure area.
10:00 - The contractor used a pump to dewater the southeast corner of the existing ash pond.
10:40 - The dozer operator spread out another lift of clay fill on the separation berm.
11:00 - The contractor excavated dry ash material from the mound on the west side of the closure area and spread it over several sections of the closure area.
11:30 - Crew rolled the separation berm with the pull-behind compactor. This area was then rolled with the self-propelled compactor.
11:45 - The contractor disked the ash in the east drying area. The contractor alternated between disking this area and the closure area for the majority of the day.
12:15 - SCS performed three clay compaction tests on the east side of the separation berm.
1:00 - Crew rolled the separation berm with the pull-behind compactor. This area was then rolled with the self-propelled compactor.
1:35 - SCS performed two clay compaction tests on the west side of the separation berm.
2:05 - The contractor excavated ash material from the southeast portion of the existing ash pond. The excavated material was stockpiled in the drying area to the north.
2:05 - Crew rolled the upper level of the closure area with the self-propelled compactor.
2:20 - Crew rolled the separation berm with the pull-behind compactor. This area was then rolled with the self-propelled compactor.
2:45 - SCS performed two clay compaction tests on the separation berm.
4:25 - The contractor performed a proof roll on the north side of the closure area. The proof roll passed.
4:30 - The contractor placed another lift of ash in the upper level of the closure area. The placed material was excavated from the drying area on the east side of the existing ash pond.
5:15 - SCS surveyed elevations for the bottom of the clay liner at the top of the separation berm slope.
6:20 - SCS staff left the site.

Material(s) Delivered to Site

Clay Fill

Construction Observer

Chris Calhoun

SCS ENGINEERS

DAILY FIELD ACTIVITIES REPORT

Client Name:	Ames Municipal Electric System	**Date:**	September 4, 2024
SCS Engineers Project Name:	Ames Ash Pond Closure	**Start Time:**	8:00 AM
SCS Engineers Project No:	27219356.02	**Stop Time:**	6:20 PM
Project Location:	Ames Municipal Electric System Ash Ponds Ames, Iowa		

Task: *Clay Import, Clay Liner Construction, Ash Placement, Ash Conditioning, Clay Compaction Testing*

Weather Information

81°, Sunny, Winds from S at 15 mph

Contractors, Personnel, and Equipment On Site

Contractors: JB Holland Personnel: 6
Equipment: 2-John Deere 380G LC Excavators, 1-CAT D6N LGP Dozer, John Deere 624K Loader, Bobcat T770 Compact Track Loader, 2-CAT Dump Trucks, 1-ROME TAW-20S Wheel Offset Disc Harrow, 1-Bobcat E50 R2 Compact Excavator, 1-Fuel Truck, 1-CAT D6T LGP Dozer, 1-Water Truck, 1-CAT CP56B Compactor, 1-Hurricane HD3700 Drop Hammer, 1- John Deere 7800 Tractor, 1-Pull-behind sheepsfoot compactor with 7" pad length, 1-Pull-behind sheepsfoot compactor with 8" pad length, 1 -John Deere 755D Crawler Loader, 1-John Deere 310 Disk, 1-ROME Disc, 1-Stoltz Truck-Mounted Site Spreader, 1-CAT D6K2 LGP Dozer, 1-Challenger MT765D Crawler Tractor, 1-CAT 140M Motor Grader, 1-Case IH MX270 Tractor, 1-Homes Rollerblade 11M

Work Areas/Boundaries

Existing Ash Pond

Testing Equipment Used/Observed and Calibration/Re-Calibration Documentation

Nuclear Density Gauge - Standard Calibration

Tests Completed/Observed

Twelve clay compaction tests performed with the nuclear density gauge.

Work Comments/Observations and Test Results

8:00 - SCS performed the standard calibration for the nuclear density gauge.
8:00 - The contractor continued placing a lift of ash material in the upper level of the closure area.
8:00 - Crew disked the ash in the lower level of the closure area.
9:45 - The contractor rolled the lower level of the closure area with the self-propelled compactor.
10:00 - Clay trucks delivered clay to the site and dumped directly onto the separation berm. This continued for a majority of the day.
10:00 - The contractor used an excavator to clean the toe of the west slope of the separation berm.
12:00 - The contractor disked the ash in the east drying area. The contractor alternated between disking this area and the closure area for the majority of the day.
12:10 - Crew rolled the first lift of the clay liner with the pull-behind compactor and the self-propelled compactor.
1:20 - SCS performed clay compaction testing on the first lift of the clay liner. The water truck sprayed down the clay as the first round of testing was low on moisture.
1:45 - The contractor used a skidloader to pick up large stones from the toe of the liner slope.
2:00 - Lift 1 retests. After testing was complete, the dozer operator began placing another lift.
3:00 - The contractor performed a proof roll on the lower level of the closure area. The western portion of the lower level passed the proof roll. The northern portion of the lower level did not pass the proof roll. The contractor began placing a lift of wet ash material on the west side of the closure area.
3:15 - SCS performed clay compaction testing on the second lift of the clay liner.
3:45 - SCS collected two in-place samples of the clay liner by pushing Shelby tubes.
4:00 - The dozer operator began placing another lift of clay.
5:00 - The contractor compacted the third lift of the clay liner.
5:55 - SCS performed clay compaction testing on the third lift of the clay liner.
6:20 - SCS staff left the site.

Material(s) Delivered to Site

Clay

Construction Observer

Chris Calhoun

SCS ENGINEERS

DAILY FIELD ACTIVITIES REPORT

Client Name:	Ames Municipal Electric System	**Date:**	September 5, 2024
SCS Engineers Project Name:	Ames Ash Pond Closure	**Start Time:**	8:20 AM
SCS Engineers Project No:	27219356.02	**Stop Time:**	6:30 PM
Project Location:	Ames Municipal Electric System Ash Ponds Ames, Iowa		

Task: *Clay Import, Clay Liner Construction, Ash Placement, Ash Testing, Clay Compaction Testing*

Weather Information

79°, Mostly Cloudy, Winds from N at 13 mph

Contractors, Personnel, and Equipment On Site

Contractors: JB Holland Personnel: 6
Equipment: 2-John Deere 380G LC Excavators, 1-CAT D6N LGP Dozer, John Deere 624K Loader, Bobcat T770 Compact Track Loader, 2-CAT Dump Trucks, 1-ROME TAW-20S Wheel Offset Disc Harrow, 1-Bobcat E50 R2 Compact Excavator, 1-Fuel Truck, 1-CAT D6T LGP Dozer, 1-Water Truck, 1-CAT CP56B Compactor, 1-Hurricane HD3700 Drop Hammer, 1- John Deere 7800 Tractor, 1-Pull-behind sheepsfoot compactor with 7" pad length, 1-Pull-behind sheepsfoot compactor with 8" pad length, 1 -John Deere 755D Crawler Loader, 1-John Deere 310 Disk, 1-ROME Disc, 1-Stoltz Truck-Mounted Site Spreader, 1-CAT D6K2 LGP Dozer, 1-Challenger MT765D Crawler Tractor, 1-CAT 140M Motor Grader, 1-Case IH MX270 Tractor, 1-Homes Rollerblade 11M

Work Areas/Boundaries

Existing Ash Pond

Testing Equipment Used/Observed and Calibration/Re-Calibration Documentation

Nuclear Density Gauge - Standard Calibration

Tests Completed/Observed

Twenty clay compaction tests performed with the nuclear density gauge. Eight density tests performed on the ash in the closure area.

Work Comments/Observations and Test Results

8:20 - SCS performed the standard calibration for the nuclear density gauge.
8:30 - Clay trucks delivered clay to the site and stockpiled directly onto the separation berm. This continued for a majority of the day.
8:40 - SCS performed clay compaction testing on the fourth lift of the clay liner.
9:40 - Lift 4, Grid 2 & 4 retests. After testing was complete, the dozer operator began placing another lift.
10:10 - SCS collected three in-place samples of the clay liner by pushing Shelby tubes.
10:50 - The contractor began compacting the fifth lift of the clay liner.
10:55 - SCS staff left the site to deliver the three clay liner samples for lab testing.
12:45 - SCS collected one in-place sample of the clay liner by pushing a Shelby tube.
1:00 - SCS performed clay compaction testing on the fifth lift of the clay liner.
1:35 - The contractor performed a proof roll of the closure area. A majority of the tested area passed the proof roll. Areas on the north and south sides of the closure area had unacceptable rutting depths.
2:00 - Lift 5, Grid 3 retest. After testing was complete, the dozer operator began placing another lift.
2:15 - SCS performed density tests on the ash in the closure area at various rutting depths.
3:00 - The contractor placed additional ash material in the sections of the closure area that passed the proof roll.
3:20 - SCS performed clay compaction testing on the sixth lift of the clay liner.
5:15 - The contractor used a hoe to excavate material from the northwest corner of the separation berm to ensure a proper tie-in to the existing clay liner.
5:20 - Lift 6, Grid 3, 4 & 5 retests.
6:00 - SCS collected one in-place sample of the clay liner by pushing a Shelby tube.
6:30 - SCS staff left the site.

Material(s) Delivered to Site

Clay

Construction Observer

Chris Calhoun

SCS ENGINEERS

DAILY FIELD ACTIVITIES REPORT

Client Name:	Ames Municipal Electric System	**Date:**	September 6, 2024
SCS Engineers Project Name:	Ames Ash Pond Closure	**Start Time:**	7:55 AM
SCS Engineers Project No:	27219356.02	**Stop Time:**	4:20 PM
Project Location:	Ames Municipal Electric System Ash Ponds Ames, Iowa		

Task: *Clay Import, Clay Liner Construction, Clay Compaction Testing. Cement Application*

Weather Information

70°, Mostly Cloudy, Winds from N at 15 mph

Contractors, Personnel, and Equipment On Site

Contractors: JB Holland Personnel: 6
Equipment: 2-John Deere 380G LC Excavators, 1-CAT D6N LGP Dozer, John Deere 624K Loader, Bobcat T770 Compact Track Loader, 2-CAT Dump Trucks, 1-ROME TAW-20S Wheel Offset Disc Harrow, 1-Bobcat E50 R2 Compact Excavator, 1-Fuel Truck, 1-CAT D6T LGP Dozer, 1-Water Truck, 1-CAT CP56B Compactor, 1-Hurricane HD3700 Drop Hammer, 1- John Deere 7800 Tractor, 1-Pull-behind sheepsfoot compactor with 7" pad length, 1-Pull-behind sheepsfoot compactor with 8" pad length, 1 -John Deere 755D Crawler Loader, 1-John Deere 310 Disk, 1-ROME Disc, 1-Stoltz Truck-Mounted Site Spreader, 1-CAT D6K2 LGP Dozer, 1-Challenger MT765D Crawler Tractor, 1-CAT 140M Motor Grader, 1-Case IH MX270 Tractor, 1-Homes Rollerblade 11M

Work Areas/Boundaries

Existing Ash Pond

Testing Equipment Used/Observed and Calibration/Re-Calibration Documentation

Nuclear Density Gauge - Standard Calibration

Tests Completed/Observed

Fifteen clay compaction tests performed with the nuclear density gauge.

Work Comments/Observations and Test Results

7:55 - The contractor used a dozer and an excavator to clear out material from the southwest corner of the separation berm.
7:55 - Cement was delivered to the site and loaded into the site spreader.
8:00 - Crew used a skidloader to pick up large stones from the toe of the clay liner slope. The stones were placed in the closure area.
9:00 - SCS staff used surveying equipment to ensure excavation in the northwest and southwest corners was down to previously surveyed elevations of the existing clay liner. SCS marked areas that needed additional excavation.
10:00 - The contractor continued excavating material from the southwest and northwest corners until a proper tie-in to the existing clay liner was verified with surveying equipment.
10:00 - The contractor applied cement to the ash in the closure area with the site spreader. Only a portion of the ash in the closure area received cement treatment before the site spreader was no longer able to be utilized due to mechanical issues.
10:45 - Crew disked the cement into the ash in the closure area.
10:45 - The contractor used a dozer to slope back the previously placed clay liner material near the southwest and northwest corners of the separation berm. This was done to create a smooth tie-in to the previously placed liner material.
11:25 - Crew sprayed water on the existing clay liner in the southwest and northwest corners of the separation berm before placing the first lift of liner material.
11:55 - SCS performed clay compaction testing on the first lift of the clay liner in the southwest and northwest corners of the separation berm.
12:45 - The dozer operator began placing another lift of clay liner material. Water was sprayed on the liner before the placement of each lift. Each lift was compacted after placement.
1:20 - SCS performed clay compaction testing on the second lift of the clay liner.
1:55 - SCS performed clay compaction testing on the third lift of the clay liner.
2:45 - SCS performed clay compaction testing on the fourth lift of the clay liner.
3:20 - SCS performed clay compaction testing on the fifth lift of the clay liner.
3:55 - SCS performed clay compaction testing on the sixth lift of the clay liner.
4:20 - SCS staff and the contractor left the site.

Material(s) Delivered to Site

NA

Construction Observer

Chris Calhoun

SCS ENGINEERS

DAILY FIELD ACTIVITIES REPORT

Client Name:	Ames Municipal Electric System	**Date:**	September 9, 2024
SCS Engineers Project Name:	Ames Ash Pond Closure	**Start Time:**	8:45 AM
SCS Engineers Project No:	27219356.02	**Stop Time:**	5:30 PM
Project Location:	Ames Municipal Electric System Ash Ponds Ames, Iowa		

Task: *Contact Water Cleanouts, Geotextile Fabric Repair, Sand Placement, Ash Conditioning*

Weather Information

83°, Sunny, Winds from SE at 13 mph

Contractors, Personnel, and Equipment On Site

Contractors: JB Holland Personnel: 5
Equipment: 2-John Deere 380G LC Excavators, 1-CAT D6N LGP Dozer, John Deere 624K Loader, Bobcat T770 Compact Track Loader, 2-CAT Dump Trucks, 1-ROME TAW-20S Wheel Offset Disc Harrow, 1-Bobcat E50 R2 Compact Excavator, 1-Fuel Truck, 1-CAT D6T LGP Dozer, 1-Water Truck, 1-CAT CP56B Compactor, 1-Hurricane HD3700 Drop Hammer, 1- John Deere 7800 Tractor, 1-Pull-behind sheepsfoot compactor with 7" pad length, 1-Pull-behind sheepsfoot compactor with 8" pad length, 1 -John Deere 755D Crawler Loader, 1-John Deere 310 Disk, 1-ROME Disc, 1-Stoltz Truck-Mounted Site Spreader, 1-CAT D6K2 LGP Dozer, 1-Challenger MT765D Crawler Tractor, 1-CAT 140M Motor Grader, 1-Case IH MX270 Tractor, 1-Homes Rollerblade 11M

Work Areas/Boundaries

Existing Ash Pond

Testing Equipment Used/Observed and Calibration/Re-Calibration Documentation

NA

Tests Completed/Observed

NA

Work Comments/Observations and Test Results

8:45 - The contractor disked the east drying area.
8:45 - The dozer operator smoothed out the top of the liner slope.
9:15 - Crew disked the closure area. The contractor alternated between disking the closure area and the east drying area throughout the day.
9:15 - The contractor used an excavator to remove large stones from the toe of the liner slope.
10:00 - SCS staff surveyed top of clay liner elevations.
12:00 - SCS staff marked areas where the geotextile fabric had been damaged along the east contact water collection line.
12:15 - The contractor extended the contact water cleanouts in the southwest corner of the closure area.
1:30 - The contractor extended the the contact water cleanouts in the northwest corner of the closure area.
1:40 - Crew placed drainage aggregate around the cleanouts in the southwest corner of the closure area. After the drainage aggregate was placed, crew began backfilling around the cleanouts with ash material. Ash was placed and compacted in approximately 12" lifts.
2:50 - The contractor extended the the contact water cleanouts in the southeast corner of the closure area.
3:00 - Crew placed drainage aggregate around the cleanouts in the northwest corner of the closure area. The area around the cleanouts was backfilled and compacted similar to the southwest corner as described above.
4:15 - The contractor placed sand along the east contact water collection line, at the toe of the clay liner.
4:50 - The contractor patched several areas where the geotextile fabric around the east contact water collection line had been torn.
5:30 - SCS staff left the site.

Material(s) Delivered to Site

Sand, Drainage Aggregate

Construction Observer

Chris Calhoun

SCS ENGINEERS

DAILY FIELD ACTIVITIES REPORT

Client Name:	Ames Municipal Electric System	**Date:**	September 10, 2024
SCS Engineers Project Name:	Ames Ash Pond Closure	**Start Time:**	8:00 AM
SCS Engineers Project No:	27219356.02	**Stop Time:**	4:45 PM
Project Location:	Ames Municipal Electric System Ash Ponds Ames, Iowa		

Task: *Ash Placement, Ash Conditioning, Proof Roll*

Weather Information

81°, Sunny, Winds from S at 14 mph

Contractors, Personnel, and Equipment On Site

Contractors: JB Holland Personnel: 5
Equipment: 2-John Deere 380G LC Excavators, 1-CAT D6N LGP Dozer, John Deere 624K Loader, Bobcat T770 Compact Track Loader, 2-CAT Dump Trucks, 1-ROME TAW-20S Wheel Offset Disc Harrow, 1-Bobcat E50 R2 Compact Excavator, 1-Fuel Truck, 1-CAT D6T LGP Dozer, 1-Water Truck, 1-CAT CP56B Compactor, 1-Hurricane HD3700 Drop Hammer, 1- John Deere 7800 Tractor, 1-Pull-behind sheepsfoot compactor with 7" pad length, 1-Pull-behind sheepsfoot compactor with 8" pad length, 1 -John Deere 755D Crawler Loader, 1-John Deere 310 Disk, 1-ROME Disc, 1-Stoltz Truck-Mounted Site Spreader, 1-CAT D6K2 LGP Dozer, 1-Challenger MT765D Crawler Tractor, 1-CAT 140M Motor Grader, 1-Case IH MX270 Tractor, 1-Homes Rollerblade 11M

Work Areas/Boundaries

Existing Ash Pond

Testing Equipment Used/Observed and Calibration/Re-Calibration Documentation

NA

Tests Completed/Observed

NA

Work Comments/Observations and Test Results

8:00 - The contractor covered the east contact water collection pipe with drainage aggregate and geotextile fabric in the contact water storage area.
8:30 - Crew rolled the upper level of the closure area with the self-propelled compactor.
9:00 - The contractor removed the pump near the existing ash pond outlet.
9:20 - The contractor performed a proof roll in the upper level of the closure area. The proof roll passed.
10:00 - The contractor placed a lift of ash material in the upper level of the closure area. The ash material was excavated from the sideslope north of the existing ash pond outlet.
11:00 - Crew disked the ash in the lower level of the closure area.
11:10 - The contractor placed some of the wetter excavated ash material in the drying area on the east side of the existing ash pond.
1:20 - The dozer operator spread out the wet ash material in the east drying area.
2:30 - SCS collected samples of the clay fill and clay liner materials for lab testing.
2:45 - The contractor began placing a lift of ash material in the valley between the separation berm and the current ash slope in the closure area. A ramp was created for haul trucks to back into the area and dump ash.
3:20 - Crew disked the ash in the east drying area.
3:45 - Haul trucks began using the ramp and palscing asf material in the valley between the separation berm and current ash slope. The material was then spread out with a dozer.
4:45 - SCS staff left the site.

Material(s) Delivered to Site

NA

Construction Observer

Chris Calhoun

SCS ENGINEERS

DAILY FIELD ACTIVITIES REPORT

Client Name:	Ames Municipal Electric System	**Date:**	September 11, 2024
SCS Engineers Project Name:	Ames Ash Pond Closure	**Start Time:**	8:00 AM
SCS Engineers Project No:	27219356.02	**Stop Time:**	4:45 PM
Project Location:	Ames Municipal Electric System Ash Ponds Ames, Iowa		

Task: *Ash Placement, Ash Conditioning, Separation Berm Construction, Clay Compaction Testing*

Weather Information

86°, Sunny, Winds from S at 10 mph

Contractors, Personnel, and Equipment On Site

Contractors: JB Holland Personnel: 4
Equipment: 2-John Deere 380G LC Excavators, 1-CAT D6N LGP Dozer, John Deere 624K Loader, Bobcat T770 Compact Track Loader, 2-CAT Dump Trucks, 1-ROME TAW-20S Wheel Offset Disc Harrow, 1-Bobcat E50 R2 Compact Excavator, 1-Fuel Truck, 1-CAT D6T LGP Dozer, 1-Water Truck, 1-CAT CP56B Compactor, 1-Hurricane HD3700 Drop Hammer, 1- John Deere 7800 Tractor, 1-Pull-behind sheepsfoot compactor with 7" pad length, 1-Pull-behind sheepsfoot compactor with 8" pad length, 1 -John Deere 755D Crawler Loader, 1-John Deere 310 Disk, 1-ROME Disc, 1-Stoltz Truck-Mounted Site Spreader, 1-Challenger MT765D Crawler Tractor, 1-CAT 140M Motor Grader, 1-Case IH MX270 Tractor, 1-Homes Rollerblade 11M

Work Areas/Boundaries

Existing Ash Pond

Testing Equipment Used/Observed and Calibration/Re-Calibration Documentation

Nuclear Density Gauge - Standard Calibration

Tests Completed/Observed

Eight clay compaction tests performed with the nuclear density gauge.

Work Comments/Observations and Test Results

8:00 - The contractor disked the ash in the east drying area. The dozer operator pushed dry ash material from the east drying area into a stockpile on the west side of the area.
8:20 - Crew extended the contact water cleanouts in the southeast corner of the existing ash pond.
10:30 - The contractor disked the ash in the closure area.
11:20 - The contractor applied water to the clay on the top of the separation berm.
11:50 - SCS performed the standard calibration for the nuclear density gauge.
12:00 - The contractor placed a lift of clay fill on the top of the separation berm.
12:55 - Crew compacted the clay on the separation berm.
1:40 - SCS performed five clay compaction tests on the separation berm.
2:20 - The dozer operator placed another lift of clay fill on approximately half the length of the separation berm with the remaining clay on-site.
2:45 - Crew compacted the clay on the separation berm.
3:00 - Crew disked the ash in the valley between the separation berm liner and the current ash slope.
3:15 - SCS performed three clay compaction tests on the separation berm.
3:20 - Crew rolled the lower level of the closure area with the self-propelled compactor.
4:00 - The contractor performed a proof roll of the lower level of the closure area. The proof roll passed.
4:00 - Crew rolled the ash in the valley between the separation berm liner and the current ash slope with the self-propelled compactor. The contractor then performed a proof roll of this area. One small area to the north had rutting that exceeded 12" depths. The contractor continued to disk this area.
4:30 - The contractor began placing a lift of dry ash material in the lower level of the closure area.
4:45 - SCS staff left the site.

Material(s) Delivered to Site

NA

Construction Observer

Chris Calhoun

SCS ENGINEERS

DAILY FIELD ACTIVITIES REPORT

Client Name:	Ames Municipal Electric System	**Date:**	September 12, 2024
SCS Engineers Project Name:	Ames Ash Pond Closure	**Start Time:**	8:00 AM
SCS Engineers Project No:	27219356.02	**Stop Time:**	5:00 PM
Project Location:	Ames Municipal Electric System Ash Ponds Ames, Iowa		

Task: *Ash Excavation, Ash Placement, Ash Conditioning*

Weather Information

86°, Sunny, Winds from SE at 13 mph

Contractors, Personnel, and Equipment On Site

Contractors: JB Holland Personnel: 4
Equipment: 2-John Deere 380G LC Excavators, 1-CAT D6N LGP Dozer, John Deere 624K Loader, Bobcat T770 Compact Track Loader, 2-CAT Dump Trucks, 1-ROME TAW-20S Wheel Offset Disc Harrow, 1-Bobcat E50 R2 Compact Excavator, 1-Fuel Truck, 1-CAT D6T LGP Dozer, 1-Water Truck, 1-CAT CP56B Compactor, 1-Hurricane HD3700 Drop Hammer, 1- John Deere 7800 Tractor, 1-Pull-behind sheepsfoot compactor with 7" pad length, 1-Pull-behind sheepsfoot compactor with 8" pad length, 1 -John Deere 755D Crawler Loader, 1-John Deere 310 Disk, 1-ROME Disc, 1-Stoltz Truck-Mounted Site Spreader, 1-Challenger MT765D Crawler Tractor, 1-CAT 140M Motor Grader, 1-Case IH MX270 Tractor, 1-Homes Rollerblade 11M

Work Areas/Boundaries

Existing Ash Pond

Testing Equipment Used/Observed and Calibration/Re-Calibration Documentation

NA

Tests Completed/Observed

NA

Work Comments/Observations and Test Results

8:00 - The contractor continued placing ash in the lower level of the closure area. The ash material was excavated from the far east side of the existing ash pond.
11:00 - Crew disked the ash in the closure area.
11:30 - The contractor began excavating material from the southeast corner of the existing ash pond. The material was placed on the east side of the drying area where ash was excavated from earlier in the morning.
11:30 - Crew disked the ash in the east drying area.
12:30 - The contractor excavated material from the sideslope north of the existing ash pond outlet. The dozer operator was on the pond floor pushing material to the face of the excavation.
1:00 - Crew rolled the ash in the valley between the separation berm liner and the current ash slope with the self-propelled compactor.
1:40 - The contractor performed a proof roll of the ash in the valley between the separation berm liner and the current ash slope in the closure area. The proof roll passed.
2:00 - The contractor placed an approximately 12" lift of wetter ash material in the valley between the separation berm liner and the current ash slope. The material was taken from the top of the mound on the west side of the closure area.
3:45 - The contactor began placing a thicker lift of dry ash material over the 12" lift of wetter ash. This dry material was excavated from the mound on the west side of the closure area.
5:00 - SCS staff left the site.

Material(s) Delivered to Site

NA

Construction Observer

Chris Calhoun

SCS ENGINEERS

DAILY FIELD ACTIVITIES REPORT

Client Name:	Ames Municipal Electric System	**Date:**	September 16, 2024
SCS Engineers Project Name:	Ames Ash Pond Closure	**Start Time:**	8:30 AM
SCS Engineers Project No:	27219356.02	**Stop Time:**	5:30 PM
Project Location:	Ames Municipal Electric System Ash Ponds Ames, Iowa		

Task: *Ash Placement, Ash Excavation, Separation Berm Construction, Clay Compaction Testing*

Weather Information

86°, Sunny, Winds from SE at 12 mph

Contractors, Personnel, and Equipment On Site

Contractors: JB Holland Personnel: 4
Equipment: 2-John Deere 380G LC Excavators, 1-CAT D6N LGP Dozer, John Deere 624K Loader, Bobcat T770 Compact Track Loader, 2-CAT Dump Trucks, 1-ROME TAW-20S Wheel Offset Disc Harrow, 1-Bobcat E50 R2 Compact Excavator, 1-Fuel Truck, 1-CAT D6T LGP Dozer, 1-Water Truck, 1-CAT CP56B Compactor, 1-Hurricane HD3700 Drop Hammer, 1- John Deere 7800 Tractor, 1-Pull-behind sheepsfoot compactor with 7" pad length, 1-Pull-behind sheepsfoot compactor with 8" pad length, 1 -John Deere 755D Crawler Loader, 1-John Deere 310 Disk, 1-ROME Disc, 1-Stoltz Truck-Mounted Site Spreader, 1-Challenger MT765D Crawler Tractor, 1-CAT 140M Motor Grader, 1-Case IH MX270 Tractor, 1-Homes Rollerblade 11M

Work Areas/Boundaries

Existing Ash Pond

Testing Equipment Used/Observed and Calibration/Re-Calibration Documentation

Nuclear Density Gauge - Standard Calibration

Tests Completed/Observed

Three clay compaction tests performed with the nuclear density gauge.

Work Comments/Observations and Test Results

8:30 - SCS performed the standard calibration for the nuclear density gauge.
8:30 - The contractor disked the clay on the top of the separation berm.
8:45 - Crew rolled the closure area with the self-propelled compactor.
8:45 - The dozer operator pulled up a layer of dry ash material from the drying area on the east side of the existing ash pond. This material was piled on the west side of this area.
9:15 - Crew extended the contact water cleanouts in the southeast corner of the existing ash pond.
9:45 - The dozer operator scraped off a layer of dry ash material from the upper level of the closure area. This material was piled on the east side of the upper level.
10:30 - Crew extended the contact water cleanouts in the northeast corner of the existing ash pond.
11:30 - Crew extended the contact water cleanouts in the southwest corner of the existing ash pond.
12:30 - The contractor performed a proof roll of the closure area. The proof roll passed.
12:45 - The contarctor compacted the southern half of the separation berm.
1:00 - The contractor began placing another lift of ash material in the closure area. Material was excavated from the slope to the north of the existing ash pond outlet. The dozer operator helped clean material from the sideslope. As the day progressed, excavation continued along the sideslope towards the location of the separation berm.
1:15 - SCS performed three clay compaction tests on the southern half of the separation berm.
5:30 - SCS staff left the site.

Material(s) Delivered to Site

NA

Construction Observer

Chris Calhoun

SCS ENGINEERS

DAILY FIELD ACTIVITIES REPORT

Client Name:	Ames Municipal Electric System	**Date:**	September 17, 2024
SCS Engineers Project Name:	Ames Ash Pond Closure	**Start Time:**	8:00 AM
SCS Engineers Project No:	27219356.02	**Stop Time:**	4:45 PM
Project Location:	Ames Municipal Electric System Ash Ponds Ames, Iowa		

Task: *Ash Placement, Ash Excavation, Clay Compaction Testing*

Weather Information

88°, Sunny, Winds from SE at 17 mph

Contractors, Personnel, and Equipment On Site

Contractors: JB Holland Personnel: 4
Equipment: 2-John Deere 380G LC Excavators, 1-CAT D6N LGP Dozer, John Deere 624K Loader, Bobcat T770 Compact Track Loader, 2-CAT Dump Trucks, 1-ROME TAW-20S Wheel Offset Disc Harrow, 1-Fuel Truck, 1-CAT D6T LGP Dozer, 1-Water Truck, 1-CAT CP56B Compactor, 1-Hurricane HD3700 Drop Hammer, 1- John Deere 7800 Tractor, 1-Pull-behind sheepsfoot compactor with 7" pad length, 1-Pull-behind sheepsfoot compactor with 8" pad length, 1 -John Deere 755D Crawler Loader, 1-John Deere 310 Disk, 1-ROME Disc, 1-Stoltz Truck-Mounted Site Spreader, 1-Challenger MT765D Crawler Tractor, 1-CAT 140M Motor Grader, 1-Case IH MX270 Tractor, 1-Holmes Rollerblade 11M

Work Areas/Boundaries

Existing Ash Pond

Testing Equipment Used/Observed and Calibration/Re-Calibration Documentation

Nuclear Density Gauge - Standard Calibration

Tests Completed/Observed

Two clay compaction tests performed with the nuclear density gauge.

Work Comments/Observations and Test Results

8:00 - The contractor pulled up a lift of clay from the northern portion of the separation berm and piled it near the center of the berm. Crew then disked the clay on the northern portion of the separation berm.
8:30 - The contractor continued placing a lift of ash material in the closure area. This material was excavated from the east side of the existing ash pond.
9:45 - Crew compacted the ash in the lower level of the closure area.
10:15 - The contractor shifted ash excavation to near the southeast corner of the separation berm. Most of the excavated material was placed in the lower level of the closure area while the remainder was placed in the drying area on the east side of the existing ash pond. Ash was excavated from this area for the remainder of the day.
12:35 - SCS performed two clay compaction tests on the northern portion of the separation berm.
1:00 - The contractor disked the ash that was placed above the separation berm liner.
1:30 - SCS met with the contractor and City of Ames staff to discuss construction progress and winterization of the site.
4:00 - The contractor disked up the clay in the far northern part of the separation berm where a compaction test had failed.
4:45 - SCS staff left the site.

Material(s) Delivered to Site

NA

Construction Observer

Chris Calhoun, Matt Kuhlenengel

SCS ENGINEERS

DAILY FIELD ACTIVITIES REPORT

Client Name:	Ames Municipal Electric System	**Date:**	September 18, 2024
SCS Engineers Project Name:	Ames Ash Pond Closure	**Start Time:**	8:15 AM
SCS Engineers Project No:	27219356.02	**Stop Time:**	6:15 PM
Project Location:	Ames Municipal Electric System Ash Ponds Ames, Iowa		

Task: *Ash Placement, Ash Conditioning, Separation Berm Construction, Clay Compaction Testing*

Weather Information

88°, Mostly Cloudy, Winds from SE at 17 mph

Contractors, Personnel, and Equipment On Site

Contractors: JB Holland Personnel: 4
Equipment: 2-John Deere 380G LC Excavators, 1-CAT D6N LGP Dozer, John Deere 624K Loader, Bobcat T770 Compact Track Loader, 2-CAT Dump Trucks, 1-ROME TAW-20S Wheel Offset Disc Harrow, 1-Fuel Truck, 1-CAT D6T LGP Dozer, 1-Water Truck, 1-CAT CP56B Compactor, 1-Hurricane HD3700 Drop Hammer, 1- John Deere 7800 Tractor, 1-Pull-behind sheepsfoot compactor with 7" pad length, 1-Pull-behind sheepsfoot compactor with 8" pad length, 1 -John Deere 755D Crawler Loader, 1-John Deere 310 Disk, 1-ROME Disc, 1-Stoltz Truck-Mounted Site Spreader, 1-Challenger MT765D Crawler Tractor, 1-CAT 140M Motor Grader, 1-Case IH MX270 Tractor, 1-Holmes Rollerblade 11M

Work Areas/Boundaries

Existing Ash Pond

Testing Equipment Used/Observed and Calibration/Re-Calibration Documentation

Nuclear Density Gauge - Standard Calibration

Tests Completed/Observed

Three clay compaction tests performed with the nuclear density gauge.

Work Comments/Observations and Test Results

8:15 - The contractor placed an approximately 3' lift of dry ash material on the west side of the separation berm, above the clay liner. This material was hauled from the mound on the west side of the closure area.
8:30 - SCS performed the standard calibration for the nuclear density gauge.
9:00 - SCS performed one clay compaction test on the northern portion of the separation berm.
9:30 - The dozer operator worked the ash in the closure area.
12:15 - The dozer operator spread out a lift of clay on the northern portion of the separation berm.
1:00 - The contractor disked the ash in the closure area.
1:00 - Crew placed drainage aggregate around the contact water cleanouts in the southeast corner of the closure area.
2:00 - The contractor disked the clay in the northern portion of the separation berm.
2:00 - The contractor used an excavator to clean out material from the existing ash pond outlet.
2:10 - Crew disked the ash to the west of the separation berm.
4:45 - Crew compacted the clay on the northern portion of the separation berm.
5:00 - The contractor used excess clay to create a platform for their pump adjacent to the existing ash pond outlet.
5:00 - The contractor compacted the ash placed above the separation berm liner.
5:25 - SCS performed two clay compaction tests on the northern portion of the separation berm.
6:00 - The contractor performed a proof roll of the ash placed above the separation berm liner. The proof roll passed.
6:15 - SCS staff left the site.

Material(s) Delivered to Site

NA

Construction Observer

Chris Calhoun

SCS ENGINEERS

DAILY FIELD ACTIVITIES REPORT

Client Name:	Ames Municipal Electric System	**Date:**	September 19, 2024
SCS Engineers Project Name:	Ames Ash Pond Closure	**Start Time:**	8:15 AM
SCS Engineers Project No:	27219356.02	**Stop Time:**	10:15 PM
Project Location:	Ames Municipal Electric System Ash Ponds Ames, Iowa		

Task: *Site cleanup from morning rain, Site prep for weekend rain*

Weather Information

66°, Cloudy with rain, Winds from SE at 6 mph

Contractors, Personnel, and Equipment On Site

Contractors: JB Holland Personnel: 2
Equipment: 2-John Deere 380G LC Excavators, 1-CAT D6N LGP Dozer, John Deere 624K Loader, Bobcat T770 Compact Track Loader, 2-CAT Dump Trucks, 1-ROME TAW-20S Wheel Offset Disc Harrow, 1-Fuel Truck, 1-CAT D6T LGP Dozer, 1-Water Truck, 1-CAT CP56B Compactor, 1-Hurricane HD3700 Drop Hammer, 1- John Deere 7800 Tractor, 1-Pull-behind sheepsfoot compactor with 7" pad length, 1-Pull-behind sheepsfoot compactor with 8" pad length, 1 -John Deere 755D Crawler Loader, 1-John Deere 310 Disk, 1-ROME Disc, 1-Stoltz Truck-Mounted Site Spreader, 1-Challenger MT765D Crawler Tractor, 1-CAT 140M Motor Grader, 1-Case IH MX270 Tractor, 1-Holmes Rollerblade 11M

Work Areas/Boundaries

Existing Ash Pond

Testing Equipment Used/Observed and Calibration/Re-Calibration Documentation

NA

Tests Completed/Observed

NA

Work Comments/Observations and Test Results

8:15 - Rain was falling at the site and no work was occuring.
9:15 - The contractor used a skidloader to clean up and smooth the perimeter access roads after the morning rain.
9:15 - The dozer operator created drainage pathways in the closure area to limit standing water from expected rain over the weekend.
10:15 - SCS staff and the contractor left the site.

Material(s) Delivered to Site

NA

Construction Observer

Chris Calhoun

SCS ENGINEERS

DAILY FIELD ACTIVITIES REPORT

Client Name:	Ames Municipal Electric System	**Date:**	September 23, 2024
SCS Engineers Project Name:	Ames Ash Pond Closure	**Start Time:**	8:15 AM
SCS Engineers Project No:	27219356.02	**Stop Time:**	4:45 PM
Project Location:	Ames Municipal Electric System Ash Ponds Ames, Iowa		

Task: *Ash Excavation, Ash Placement, Cement Application, Silt Fence Repair*

Weather Information

72°, Sunny, Winds from E at 5 mph

Contractors, Personnel, and Equipment On Site

Contractors: JB Holland Personnel: 4
Equipment: 2-John Deere 380G LC Excavators, 1-CAT D6N LGP Dozer, John Deere 624K Loader, Bobcat T770 Compact Track Loader, 2-CAT Dump Trucks, 1-ROME TAW-20S Wheel Offset Disc Harrow, 1-Fuel Truck, 1-CAT D6T LGP Dozer, 1-Water Truck, 1-CAT CP56B Compactor, 1-Hurricane HD3700 Drop Hammer, 1- John Deere 7800 Tractor, 1-Pull-behind sheepsfoot compactor with 7" pad length, 1-Pull-behind sheepsfoot compactor with 8" pad length, 1 -John Deere 755D Crawler Loader, 1-John Deere 310 Disk, 1-ROME Disc, 1-Stoltz Truck-Mounted Site Spreader, 1-Challenger MT765D Crawler Tractor, 1-CAT 140M Motor Grader, 1-Case IH MX270 Tractor, 1-Holmes Rollerblade 11M

Work Areas/Boundaries

Existing Ash Pond

Testing Equipment Used/Observed and Calibration/Re-Calibration Documentation

NA

Tests Completed/Observed

NA

Work Comments/Observations and Test Results

9:00 - The contractor used dozers to work the top layer of ash in the closure area and east drying area.
9:15 - SCS met with City of Ames staff to discuss excavation and restoration along the south and east perimeter access roads.
9:30 - The contractor used a motor grader to level out the perimeter access roads.
10:00 - Crew disked the ash in the drying area on the east side of the existing ash pond.
11:00 - Crew disked the ash in the closure area.
11:15 - The contractor worked on repairing silt fence in several locations on the north side of the site.
11:45 - The contractor excavated ash from the southeast corner of the existing ash pond. The excavated material was placed and spread out on the east side of the closure area.
2:30 - The contractor used an excavator to move material around on the mound located on the west side of the closure area.
2:30 - Crew disked the ash in the closure area.
3:20 - Cement powder was delivered to the site and loaded into the site spreader.
4:10 - The contractor applied cement to the ash in the closure area with the site spreader.
4:45 - SCS staff left the site.

Material(s) Delivered to Site

NA

Construction Observer

Chris Calhoun

SCS ENGINEERS

DAILY FIELD ACTIVITIES REPORT

Client Name:	Ames Municipal Electric System	**Date:**	September 24, 2024
SCS Engineers Project Name:	Ames Ash Pond Closure	**Start Time:**	8:00 AM
SCS Engineers Project No:	27219356.02	**Stop Time:**	12:45 PM
Project Location:	Ames Municipal Electric System Ash Ponds Ames, Iowa		

Task: *Cement Application, Ash Conditioning*

Weather Information

74°, Cloudy with light rain, Winds from W at 8 mph

Contractors, Personnel, and Equipment On Site

Contractors: JB Holland Personnel: 5
Equipment: 2-John Deere 380G LC Excavators, 1-CAT D6N LGP Dozer, John Deere 624K Loader, Bobcat T770 Compact Track Loader, 2-CAT Dump Trucks, 1-ROME TAW-20S Wheel Offset Disc Harrow, 1-Fuel Truck, 1-CAT D6T LGP Dozer, 1-Water Truck, 1-CAT CP56B Compactor, 1-Hurricane HD3700 Drop Hammer, 1- John Deere 7800 Tractor, 1-Pull-behind sheepsfoot compactor with 7" pad length, 1-Pull-behind sheepsfoot compactor with 8" pad length, 1 -John Deere 755D Crawler Loader, 1-John Deere 310 Disk, 1-ROME Disc, 1-Stoltz Truck-Mounted Site Spreader, 1-Challenger MT765D Crawler Tractor, 1-CAT 140M Motor Grader, 1-Case IH MX270 Tractor, 1-Holmes Rollerblade 11M

Work Areas/Boundaries

Existing Ash Pond

Testing Equipment Used/Observed and Calibration/Re-Calibration Documentation

NA

Tests Completed/Observed

NA

Work Comments/Observations and Test Results

8:00 - The contractor applied cement to the ash in the closure area with the site spreader.
8:45 - Crew disked the cement into the ash in the closure area.
9:00 - Weekly construction progress meeting.
9:45 - The contractor used dozers to smooth out the top of the ash in the closure area and the east drying area to limit infiltration of rainwater.
12:45 - SCS staff and the contractor left the site. The contractor planned to return later in the day to dewater the site and prepare for the next day of work.

Material(s) Delivered to Site

NA

Construction Observer

Chris Calhoun

SCS ENGINEERS

DAILY FIELD ACTIVITIES REPORT

Client Name:	Ames Municipal Electric System	**Date:**	September 25, 2024
SCS Engineers Project Name:	Ames Ash Pond Closure	**Start Time:**	8:15 AM
SCS Engineers Project No:	27219356.02	**Stop Time:**	5:00 PM
Project Location:	Ames Municipal Electric System Ash Ponds Ames, Iowa		

Task: *Ash Excavation, Ash Placement, Ash Conditioning*

Weather Information

80°, Sunny, Winds from N at 6 mph

Contractors, Personnel, and Equipment On Site

Contractors: JB Holland Personnel: 4
Equipment: 1-John Deere 380G LC Excavator, 1-CAT D6N LGP Dozer, John Deere 624K Loader, Bobcat T770 Compact Track Loader, 2-CAT Dump Trucks, 1-ROME TAW-20S Wheel Offset Disc Harrow, 1-Fuel Truck, 1-CAT D6T LGP Dozer, 1-Water Truck, 1-CAT CP56B Compactor, 1-Hurricane HD3700 Drop Hammer, 1- John Deere 7800 Tractor, 1-Pull-behind sheepsfoot compactor with 7" pad length, 1-Pull-behind sheepsfoot compactor with 8" pad length, 1 -John Deere 755D Crawler Loader, 1-John Deere 310 Disk, 1-ROME Disc, 1-Stoltz Truck-Mounted Site Spreader, 1-Challenger MT765D Crawler Tractor, 1-CAT 140M Motor Grader, 1-Case IH MX270 Tractor, 1-Holmes Rollerblade 11M

Work Areas/Boundaries

Existing Ash Pond

Testing Equipment Used/Observed and Calibration/Re-Calibration Documentation

NA

Tests Completed/Observed

NA

Work Comments/Observations and Test Results

8:15 - The contractor placed a lift of dry ash material on the east side of the closure area. This material was hauled from the mound on the west side of the closure area.
11:30 - Crew disked the ash in the drying area on the east side of the existing ash pond.
1:00 - The contractor continued placing a lift of dry ash material on the east side of the closure area.
3:30 - Crew disked the ash in the closure area.
4:00 - The contractor excavated ash from the southeast corner of the existing ash pond. The excavated ash was placed in the drying area on the east side of the existing ash pond. The contractor used a dozer to assist in clearing the ash from the sideslope.
5:00 - SCS staff left the site.

Material(s) Delivered to Site

NA

Construction Observer

Chris Calhoun

SCS ENGINEERS

DAILY FIELD ACTIVITIES REPORT

Client Name:	Ames Municipal Electric System	**Date:**	September 26, 2024
SCS Engineers Project Name:	Ames Ash Pond Closure	**Start Time:**	8:15 AM
SCS Engineers Project No:	27219356.02	**Stop Time:**	5:30 PM
Project Location:	Ames Municipal Electric System Ash Ponds Ames, Iowa		

Task: *Ash Excavation, Ash Placement, Ash Conditioning*

Weather Information

82°, Sunny, Winds from N at 6 mph

Contractors, Personnel, and Equipment On Site

Contractors: JB Holland Personnel: 4
Equipment: 1-John Deere 380G LC Excavator, 1-CAT D6N LGP Dozer, John Deere 624K Loader, Bobcat T770 Compact Track Loader, 2-CAT Dump Trucks, 1-ROME TAW-20S Wheel Offset Disc Harrow, 1-Fuel Truck, 1-CAT D6T LGP Dozer, 1-Water Truck, 1-CAT CP56B Compactor, 1-Hurricane HD3700 Drop Hammer, 1- John Deere 7800 Tractor, 1-Pull-behind sheepsfoot compactor with 7" pad length, 1-Pull-behind sheepsfoot compactor with 8" pad length, 1 -John Deere 755D Crawler Loader, 1-John Deere 310 Disk, 1-ROME Disc, 1-Stoltz Truck-Mounted Site Spreader, 1-Challenger MT765D Crawler Tractor, 1-CAT 140M Motor Grader, 1-Case IH MX270 Tractor, 1-Holmes Rollerblade 11M

Work Areas/Boundaries

Existing Ash Pond

Testing Equipment Used/Observed and Calibration/Re-Calibration Documentation

NA

Tests Completed/Observed

NA

Work Comments/Observations and Test Results

8:15 - The contractor rolled the closure area with the self-propelled compactor.
9:00 - Site spreader mobilized to the site. Previous site spreader that was experiencing mechanical issues taken offsite.
10:15 - The contractor performed a proof roll of the closure area. Some areas passed the proof roll while other areas had rutting that exceeded the acceptable limits. SCS staff conveyed to the contractor which areas could receive another lift of ash and which areas required additional conditioning.
10:50 - Crew disked the ash in the areas that failed the proof roll.
11:00 - The contractor began placing a lift of ash material in the sections of the closure area that passed the proof roll. The placed material was excavated from the east pond area.
1:00 - Crew disked the ash in the closure area and the drying area on the east side of the existing ash pond.
2:45 - Crew rolled the upper level of the closure area with the self-propelled compactor.
3:00 - The contractor disked the areas in the lower level of the closure area.
3:45 - The contractor placed a lift of ash material in the upper level of the closure area. The placed material was excavated from the east pond area.
4:15 - SCS surveyed the location of the existing pond outlet to compare to the record drawings.
4:30 - Crew rolled a section of the lower level of the closure area with the self-propelled compactor. This area was then proof rolled. The western half of this area passed the proof roll while the eastern half required additional conditioning.
5:30 - SCS staff left the site.

Material(s) Delivered to Site

NA

Construction Observer

Chris Calhoun

SCS ENGINEERS

DAILY FIELD ACTIVITIES REPORT

Client Name:	Ames Municipal Electric System	**Date:**	September 27, 2024
SCS Engineers Project Name:	Ames Ash Pond Closure	**Start Time:**	8:15 AM
SCS Engineers Project No:	27219356.02	**Stop Time:**	4:45 PM
Project Location:	Ames Municipal Electric System Ash Ponds Ames, Iowa		

Task: *Cement Application, Ash Conditioning*

Weather Information

82°, Sunny, Winds from N at 13 mph

Contractors, Personnel, and Equipment On Site

Contractors: JB Holland Personnel: 4
Equipment: 1-John Deere 380G LC Excavator, 1-CAT D6N LGP Dozer, John Deere 624K Loader, Bobcat T770 Compact Track Loader, 2-CAT Dump Trucks, 1-ROME TAW-20S Wheel Offset Disc Harrow, 1-Fuel Truck, 1-CAT D6T LGP Dozer, 1-Water Truck, 1-CAT CP56B Compactor, 1-Hurricane HD3700 Drop Hammer, 1- John Deere 7800 Tractor, 1-Pull-behind sheepsfoot compactor with 7" pad length, 1-Pull-behind sheepsfoot compactor with 8" pad length, 1 -John Deere 755D Crawler Loader, 1-John Deere 310 Disk, 1-ROME Disc, 1-Stoltz Truck-Mounted Site Spreader, 1-Challenger MT765D Crawler Tractor, 1-CAT 140M Motor Grader, 1-Case IH MX270 Tractor, 1-Holmes Rollerblade 11M

Work Areas/Boundaries

Existing Ash Pond

Testing Equipment Used/Observed and Calibration/Re-Calibration Documentation

NA

Tests Completed/Observed

NA

Work Comments/Observations and Test Results

8:15 - The contractor applied cement to the ash in the upper level of the closure area with the site spreader.
8:45 - Crew disked the cement into the ash in the closure area.
10:30 - The contractor used the bucket on an excavator to spread out and compact the stockpiled ash in the drying area on the east side of the existing ash pond.
10:45 - A load of cement was delievered to the site and loaded into the site spreader.
11:10 - The contractor applied cement to the ash in the closure area. After application, the cement was disked into the ash.
1:10 - Another load of cement was delievered to the site and loaded into the site spreader.
1:55 - The contractor continued applying cement to the ash in the closure area.
2:10 - The contractor disked the ash in the drying area on the east side of the existing ash pond.
2:40 - Crew disked the cement into the ash in the closure area.
4:00 - Another load of cement was delievered to the site and loaded into the site spreader.
4:00 - The dozer operator began smoothing out the ash in the upper level of the closure area to seal it up for the weekend.
4:40 - The contractor applied cement to the ash on the lower (west) side of the closure area.
4:45 - SCS staff left the site.

Material(s) Delivered to Site

Cement

Construction Observer

Chris Calhoun

SCS ENGINEERS

DAILY FIELD ACTIVITIES REPORT

Client Name:	Ames Municipal Electric System	**Date:**	September 30, 2024
SCS Engineers Project Name:	Ames Ash Pond Closure	**Start Time:**	8:30 AM
SCS Engineers Project No:	27219356.02	**Stop Time:**	5:00 PM
Project Location:	Ames Municipal Electric System Ash Ponds Ames, Iowa		

Task: *Ash Excavation, Ash Placement, Ash Conditioning*

Weather Information

85°, Sunny, Winds from SW at 14 mph

Contractors, Personnel, and Equipment On Site

Contractors: JB Holland Personnel: 4
Equipment: 1-John Deere 380G LC Excavator, 1-CAT D6N LGP Dozer, John Deere 624K Loader, Bobcat T770 Compact Track Loader, 2-CAT Dump Trucks, 1-ROME TAW-20S Wheel Offset Disc Harrow, 1-Fuel Truck, 1-CAT D6T LGP Dozer, 1-Water Truck, 1-CAT CP56B Compactor, 1-Hurricane HD3700 Drop Hammer, 1- John Deere 7800 Tractor, 1-Pull-behind sheepsfoot compactor with 7" pad length, 1-Pull-behind sheepsfoot compactor with 8" pad length, 1 -John Deere 755D Crawler Loader, 1-John Deere 310 Disk, 1-ROME Disc, 1-Stoltz Truck-Mounted Site Spreader, 1-Challenger MT765D Crawler Tractor, 1-CAT 140M Motor Grader, 1-Case IH MX270 Tractor, 1-Holmes Rollerblade 11M

Work Areas/Boundaries

Existing Ash Pond

Testing Equipment Used/Observed and Calibration/Re-Calibration Documentation

NA

Tests Completed/Observed

NA

Work Comments/Observations and Test Results

8:30 - The contractor placed a lift of ash material on the east side of the closure area. This material was excavated from the southeast corner of the existing ash pond.
10:30 - Crew compacted the ash in the upper level and west side of the closure area.
11:30 - The contractor performed a proof roll of the closure area. A majority of the area passed the proof roll except for a small section in the southwest corner of the closure area. The contractor proceeded to disk the ash in the area that failed the proof roll.
12:00 - The contractor began placing a lift of ash material in the sections of the closure area that passed the proof roll. This material was initially being excavated from the containment pit on the east side of the existing ash pond. Later in the afternoon the material continued to be excavated from the southeast corner of the existing ash pond. The excavation and placement of material continued for the remainder of the day.
12:10 - Crew disked the ash in the drying area on the east side of the existing ash pond. This area and the southwest corner of the closure area were disked several more times throughout the remainder of the day.
5:00 - SCS staff left the site.

Material(s) Delivered to Site

Cement

Construction Observer

Chris Calhoun

SCS ENGINEERS

DAILY FIELD ACTIVITIES REPORT

Client Name:	Ames Municipal Electric System	**Date:**	October 1, 2024
SCS Engineers Project Name:	Ames Ash Pond Closure	**Start Time:**	8:00 AM
SCS Engineers Project No:	27219356.02	**Stop Time:**	4:15 PM
Project Location:	Ames Municipal Electric System Ash Ponds Ames, Iowa		

Task: *Cement Application, Ash Excavation, Ash Conditioning*

Weather Information

69°, Sunny, Winds from NW at 15 mph

Contractors, Personnel, and Equipment On Site

Contractors: JB Holland Personnel: 4
Equipment: 1-John Deere 380G LC Excavator, 1-CAT D6N LGP Dozer, John Deere 624K Loader, Bobcat T770 Compact Track Loader, 2-CAT Dump Trucks, 1-ROME TAW-20S Wheel Offset Disc Harrow, 1-Fuel Truck, 1-CAT D6T LGP Dozer, 1-Water Truck, 1-CAT CP56B Compactor, 1-Hurricane HD3700 Drop Hammer, 1- John Deere 7800 Tractor, 1-Pull-behind sheepsfoot compactor with 7" pad length, 1-Pull-behind sheepsfoot compactor with 8" pad length, 1 -John Deere 755D Crawler Loader, 1-John Deere 310 Disk, 1-ROME Disc, 1-Stoltz Truck-Mounted Site Spreader, 1-Challenger MT765D Crawler Tractor, 1-CAT 140M Motor Grader, 1-Case IH MX270 Tractor, 1-Holmes Rollerblade 11M

Work Areas/Boundaries

Existing Ash Pond

Testing Equipment Used/Observed and Calibration/Re-Calibration Documentation

NA

Tests Completed/Observed

NA

Work Comments/Observations and Test Results

8:00 - The contractor applied cement to the ash in the closure area.
8:30 - Crew disked the cement into the ash in the closure area. Another load of cement was delivered to the site and loaded into the site spreader.
8:30 - Crew disked the ash in the southwest corner of the closure area.
9:00 - The contractor continued applying cement to the ash in the closure area. After application the cement was disked into the ash.
9:30 - Crew compacted the ash in the southwest section of the closure area with the self-propelled compactor.
10:05 - The contractor performed a proof roll of the southwest corner of the closure area. The proof roll passed.
10:30 - The contractor placed a lift of ash material in the southwest corner of the closure area.
11:30 - Crew disked the ash in the drying area on the east side of the existing ash pond.
11:30 - The contractor continued applying cement to the ash in the closure area. After application the cement was disked into the ash.
12:10 - The dozer operator smoothed and sealed the sections of the closure area that had been treated with cement.
12:10 - The contracor used a skidloader to clean up the perimeter access roads.
1:45 - The contractor excavated ash in the southeast corner of the existing ash pond. The excavated material was placed in the containment pit on the east side of the existing ash pond.
3:55 - Excavation concluded for the day. Crew used a skidloader to clean up the east access road.
4:00 - Crew disked the ash in the drying area on the east side of the existing ash pond.
4:15 - SCS staff and the contractor left the site for the day.

Material(s) Delivered to Site

Cement

Construction Observer

Chris Calhoun

SCS ENGINEERS

DAILY FIELD ACTIVITIES REPORT

Client Name:	Ames Municipal Electric System	**Date:**	October 2, 2024
SCS Engineers Project Name:	Ames Ash Pond Closure	**Start Time:**	8:30 AM
SCS Engineers Project No:	27219356.02	**Stop Time:**	12:15 PM
Project Location:	Ames Municipal Electric System Ash Ponds Ames, Iowa		

Task: *Dewatering, Ash Conditioning*

Weather Information

70°, Sunny, Winds from S at 20 mph

Contractors, Personnel, and Equipment On Site

Contractors: JB Holland Personnel: 1
Equipment: 1-John Deere 380G LC Excavator, 1-CAT D6N LGP Dozer, John Deere 624K Loader, Bobcat T770 Compact Track Loader, 2-CAT Dump Trucks, 1-ROME TAW-20S Wheel Offset Disc Harrow, 1-Fuel Truck, 1-CAT D6T LGP Dozer, 1-Water Truck, 1-CAT CP56B Compactor, 1-Hurricane HD3700 Drop Hammer, 1- John Deere 7800 Tractor, 1-Pull-behind sheepsfoot compactor with 7" pad length, 1-Pull-behind sheepsfoot compactor with 8" pad length, 1 -John Deere 755D Crawler Loader, 1-John Deere 310 Disk, 1-ROME Disc, 1-Stoltz Truck-Mounted Site Spreader, 1-Challenger MT765D Crawler Tractor, 1-CAT 140M Motor Grader, 1-Case IH MX270 Tractor, 1-Holmes Rollerblade 11M

Work Areas/Boundaries

Existing Ash Pond

Testing Equipment Used/Observed and Calibration/Re-Calibration Documentation

NA

Tests Completed/Observed

NA

Work Comments/Observations and Test Results

8:30 - The contractor disked the ash in the drying area on the east side of the existing ash pond.
9:30 - The contractor worked the material in the containment pit on the east side of the existing ash pond.
10:20 - The contractor used a dozer to clean ash from the sideslope on the east side of the existing ash pond.
10:30 - The contractor used a dozer to work the bottom layer of wet ash material in the southeast corner of the existing ash pond. The dozer operator created a drainage pathway for surface water to travel towards the sump located near the existing pond outlet.
12:15 - SCS staff left the site.

Material(s) Delivered to Site

NA

Construction Observer

Chris Calhoun

SCS ENGINEERS

DAILY FIELD ACTIVITIES REPORT

Client Name:	Ames Municipal Electric System	**Date:**	October 3, 2024
SCS Engineers Project Name:	Ames Ash Pond Closure	**Start Time:**	8:15 AM
SCS Engineers Project No:	27219356.02	**Stop Time:**	5:15 PM
Project Location:	Ames Municipal Electric System Ash Ponds Ames, Iowa		

Task: *Ash Excavation, Ash Placement, Ash Conditioning*

Weather Information

81°, Sunny, Winds from E at 18 mph

Contractors, Personnel, and Equipment On Site

Contractors: JB Holland Personnel: 4
Equipment: 1-John Deere 380G LC Excavator, 1-CAT D6N LGP Dozer, John Deere 624K Loader, Bobcat T770 Compact Track Loader, 2-CAT Dump Trucks, 1-ROME TAW-20S Wheel Offset Disc Harrow, 1-Fuel Truck, 1-CAT D6T LGP Dozer, 1-Water Truck, 1-CAT CP56B Compactor, 1-Hurricane HD3700 Drop Hammer, 1- John Deere 7800 Tractor, 1-Pull-behind sheepsfoot compactor with 7" pad length, 1-Pull-behind sheepsfoot compactor with 8" pad length, 1 -John Deere 755D Crawler Loader, 1-John Deere 310 Disk, 1-ROME Disc, 1-Stoltz Truck-Mounted Site Spreader, 1-Challenger MT765D Crawler Tractor, 1-CAT 140M Motor Grader, 1-Case IH MX270 Tractor, 1-Holmes Rollerblade 11M

Work Areas/Boundaries

Existing Ash Pond

Testing Equipment Used/Observed and Calibration/Re-Calibration Documentation

NA

Tests Completed/Observed

NA

Work Comments/Observations and Test Results

8:15 - The contractor compacted the ash in the upper level and west side of the closure area.
9:05 - The contractor began placing another lift of ash material in the upper level and west side of the closure area. The placed material was excavated from the southeast corner of the existing ash pond.
11:45 - Crew disked a section of the closure area that needed additional conditioning prior to the placement of another lift.
1:45 - Crew disked the ash in the closure area again.
1:45 - The contractor compacted the ash on the east side of the closure area.
2:15 - SCS staff and the contractor traveled to the borrow site to inspect the general fill stockpile.
3:00 - The contractor performed a proof roll of the east side of the closure area. The proof roll passed.
3:25 - The contractor placed a lift of ash material on the east side of the closure area.
4:00 - The contractor placed a lift of ash material in the portion of the closure area that had been disked throughout the day.
5:15 - SCS staff left the site.

Material(s) Delivered to Site

NA

Construction Observer

Chris Calhoun

SCS ENGINEERS

DAILY FIELD ACTIVITIES REPORT

Client Name:	Ames Municipal Electric System	**Date:**	October 4, 2024
SCS Engineers Project Name:	Ames Ash Pond Closure	**Start Time:**	8:15 AM
SCS Engineers Project No:	27219356.02	**Stop Time:**	12:45 PM
Project Location:	Ames Municipal Electric System Ash Ponds Ames, Iowa		

Task: *Ash Excavation, Ash Placement, Ash Conditioning*

Weather Information

69°, Sunny, Winds from E at 13 mph

Contractors, Personnel, and Equipment On Site

Contractors: JB Holland Personnel: 4
Equipment: 1-John Deere 380G LC Excavator, 1-CAT D6N LGP Dozer, John Deere 624K Loader, Bobcat T770 Compact Track Loader, 2-CAT Dump Trucks, 1-ROME TAW-20S Wheel Offset Disc Harrow, 1-Fuel Truck, 1-CAT D6T LGP Dozer, 1-Water Truck, 1-CAT CP56B Compactor, 1-Hurricane HD3700 Drop Hammer, 1- John Deere 7800 Tractor, 1-Pull-behind sheepsfoot compactor with 7" pad length, 1-Pull-behind sheepsfoot compactor with 8" pad length, 1 -John Deere 755D Crawler Loader, 1-John Deere 310 Disk, 1-ROME Disc, 1-Stoltz Truck-Mounted Site Spreader, 1-Challenger MT765D Crawler Tractor, 1-CAT 140M Motor Grader, 1-Case IH MX270 Tractor, 1-Holmes Rollerblade 11M

Work Areas/Boundaries

Existing Ash Pond

Testing Equipment Used/Observed and Calibration/Re-Calibration Documentation

NA

Tests Completed/Observed

NA

Work Comments/Observations and Test Results

8:15 - The contractor disked cement powder into the ash on the west side of the closure area. A load of cement was delivered to the site and loaded into the site spreader.
9:25 - The contractor applied cement powder to the ash in the upper level of the closure area. After application, the cement was disked into the ash.
10:30 - The contractor continued applying cement in the upper level of the closure area and the east side of the closure area.
11:15 - The contractor disked the cement into the ash on the east side of the closure area.
11:15 - The dozer operator smoothed and sealed the ash in the treated and disked portions of the closure area.
12:00 - Crew used a skidloader to clean the perimeter roads.
12:25 - Crew cleaned the ash from the dozer tracks prior to ending work for the week.
12:45 - SCS staff and the contractor left the site.

Material(s) Delivered to Site

Cement

Construction Observer

Chris Calhoun

SCS ENGINEERS

DAILY FIELD ACTIVITIES REPORT

Client Name:	Ames Municipal Electric System	**Date:**	October 7, 2024
SCS Engineers Project Name:	Ames Ash Pond Closure	**Start Time:**	8:45 AM
SCS Engineers Project No:	27219356.02	**Stop Time:**	5:30 PM
Project Location:	Ames Municipal Electric System Ash Ponds Ames, Iowa		

Task: *Ash Excavation, Ash Placement*

Weather Information

71°, Sunny, Winds from W at 3 mph

Contractors, Personnel, and Equipment On Site

Contractors: JB Holland Personnel: 4
Equipment: 1-John Deere 380G LC Excavator, 1-CAT D6N LGP Dozer, John Deere 624K Loader, Bobcat T770 Compact Track Loader, 2-CAT Dump Trucks, 1-ROME TAW-20S Wheel Offset Disc Harrow, 1-Fuel Truck, 1-CAT D6T LGP Dozer, 1-Water Truck, 1-CAT CP56B Compactor, 1-Hurricane HD3700 Drop Hammer, 1- John Deere 7800 Tractor, 1-Pull-behind sheepsfoot compactor with 7" pad length, 1-Pull-behind sheepsfoot compactor with 8" pad length, 1 -John Deere 755D Crawler Loader, 1-John Deere 310 Disk, 1-ROME Disc, 1-Stoltz Truck-Mounted Site Spreader, 1-Challenger MT765D Crawler Tractor, 1-CAT 140M Motor Grader, 1-Case IH MX270 Tractor, 1-Holmes Rollerblade 11M

Work Areas/Boundaries

Existing Ash Pond

Testing Equipment Used/Observed and Calibration/Re-Calibration Documentation

NA

Tests Completed/Observed

NA

Work Comments/Observations and Test Results

8:45 - The contractor compacted the ash in the closure area.
10:35 - The contractor performed a proof roll of the closure area. A majority of the closure area passed the proof roll, with the exception of an approximately 20' wide strip in the lower level (west portion) of the closure area.
10:50 - The contractor began placing another lift of ash in the portions of the closure area that passed the proof roll. The placed material was excavated from the southeast corner of the existing ash pond. Ash excavation and placement continued for the remainder of the day.
12:45 - The contractor shifted to excavating material from the containment pit on the east side of the existing ash pond.
2:45 - The contractor shifted back to excavating material from the southeast portion of the existing ash pond.
5:30 - SCS staff left the site.

Material(s) Delivered to Site

NA

Construction Observer

Chris Calhoun

SCS ENGINEERS

DAILY FIELD ACTIVITIES REPORT

Client Name:	Ames Municipal Electric System	**Date:**	October 8, 2024
SCS Engineers Project Name:	Ames Ash Pond Closure	**Start Time:**	8:15 AM
SCS Engineers Project No:	27219356.02	**Stop Time:**	7:10 PM
Project Location:	Ames Municipal Electric System Ash Ponds Ames, Iowa		

Task: *Cement Application, Ash Excavation, Ash Placement, Cleaned Excavation Clearing*

Weather Information

79°, Sunny, Winds from SW at 6 mph

Contractors, Personnel, and Equipment On Site

Contractors: JB Holland Personnel: 4
Equipment: 1-John Deere 380G LC Excavator, 1-CAT D6N LGP Dozer, John Deere 624K Loader, Bobcat T770 Compact Track Loader, 2-CAT Dump Trucks, 1-ROME TAW-20S Wheel Offset Disc Harrow, 1-Fuel Truck, 1-CAT D6T LGP Dozer, 1-Water Truck, 1-CAT CP56B Compactor, 1-Hurricane HD3700 Drop Hammer, 1- John Deere 7800 Tractor, 1-Pull-behind sheepsfoot compactor with 7" pad length, 1-Pull-behind sheepsfoot compactor with 8" pad length, 1 -John Deere 755D Crawler Loader, 1-John Deere 310 Disk, 1-ROME Disc, 1-Stoltz Truck-Mounted Site Spreader, 1-Challenger MT765D Crawler Tractor, 1-CAT 140M Motor Grader, 1-Case IH MX270 Tractor, 1-Holmes Rollerblade 11M

Work Areas/Boundaries

Existing Ash Pond

Testing Equipment Used/Observed and Calibration/Re-Calibration Documentation

NA

Tests Completed/Observed

NA

Work Comments/Observations and Test Results

8:15 - The contractor disked cement powder into the ash in the upper level of the closure area. A load of cement was delivered to the site and loaded into the site spreader.
8:50 - The contractor applied cement powder to the ash in the upper level of the closure area. After application, the cement was disked into the ash.
9:35 - Another load of cement was delivered to the site and loaded into the site spreader.
10:25 - The contractor applied cement to the ash on the east and west sides of the closure area. After application, the cement was disked into the ash.
11:10 - The dozer operator smoothed and sealed the ash in the upper level of the closure area.
12:00 - The contractor continued applying cement to the ash on the west side of the closure area. After application, the cement was disked into the ash.
12:45 - Crew used a skidloader to clean the perimeter roads.
1:00 - The dozer operator continued smoothing and sealing the treated portions of the closure area.
2:40 - The contractor potholed several spots along the proposed top of the south sideslope in the southeast corner of the existing ash pond to investigate the potential presence of ash at the top of the slope. Ash was not discovered in the potholes.
3:20 - The contractor began excavating ash from the south sideslope. Excavated material was hauled and dumped in the closure area. A dozer was also utilized to clean the sideslope.
5:00 - SCS staff assessed the south sideslope in the southeast corner of the existing ash pond to be cleared as clean. It was determined that additional cleaning of the sideslope was required to remove remaining pockets of ash.
5:30 - The contractor continued cleaning the sideslope with the dozer.
6:00 - SCS staff inspected the south sideslope again. A section near the existing pond outlet was cleared as clean.
6:30 - SCS staff surveyed the section of sideslope that was cleared as clean.
7:10 - SCS staff left the site.

Material(s) Delivered to Site

Cement

Construction Observer

Chris Calhoun

SCS ENGINEERS

DAILY FIELD ACTIVITIES REPORT

Client Name:	Ames Municipal Electric System	**Date:**	October 9, 2024
SCS Engineers Project Name:	Ames Ash Pond Closure	**Start Time:**	7:15 AM
SCS Engineers Project No:	27219356.02	**Stop Time:**	6:50 PM
Project Location:	Ames Municipal Electric System Ash Ponds Ames, Iowa		

Task: *Sideslope Excavation, Cleaned Excavation Clearing, General Fill Placement*

Weather Information

85°, Sunny, Winds from SW at 9 mph

Contractors, Personnel, and Equipment On Site

Contractors: JB Holland Personnel: 4
Equipment: 1-John Deere 380G LC Excavator, 1-CAT D6N LGP Dozer, John Deere 624K Loader, Bobcat T770 Compact Track Loader, 2-CAT Dump Trucks, 1-ROME TAW-20S Wheel Offset Disc Harrow, 1-Fuel Truck, 1-CAT D6T LGP Dozer, 1-Water Truck, 1-CAT CP56B Compactor, 1-Hurricane HD3700 Drop Hammer, 1- John Deere 7800 Tractor, 1-Pull-behind sheepsfoot compactor with 7" pad length, 1-Pull-behind sheepsfoot compactor with 8" pad length, 1 -John Deere 755D Crawler Loader, 1-John Deere 310 Disk, 1-ROME Disc, 1-Stoltz Truck-Mounted Site Spreader, 1-Challenger MT765D Crawler Tractor, 1-CAT 140M Motor Grader, 1-Case IH MX270 Tractor, 1-Holmes Rollerblade 11M

Work Areas/Boundaries

Existing Ash Pond

Testing Equipment Used/Observed and Calibration/Re-Calibration Documentation

NA

Tests Completed/Observed

NA

Work Comments/Observations and Test Results

7:15 - SCS staff surveyed the top of the south sideslope. SCS staff identified several small areas further down the slope that required additional cleaning of remaining ash.
7:50 - General fill was delivered to the site and dumped at the top of the south sideslope in the southeast corner of the existing ash pond. The general fill was stockpiled on the south sideslope near the existing ash pond outlet.
8:45 - The dozer operator cleaned the remaining pockets of ash from the south sideslope. The sideslope was cleared as clean.
9:25 - SCS staff surveyed the remainder of the south sideslope.
9:45 - The dozer operator began spreading out a lift of general fill on the south sideslope.
10:25 - Crew compacted the lift of general fill with the self-propelled compactor.
12:00 - The dozer operator spread out another lift of general fill on the south sideslope.After placement, the general fill was compacted.
1:45 - The dozer operator spread out another lift of general fill on the south sideslope.After placement, the general fill was compacted.
2:00 - General fill continued to be dumped and stockpiled on the east end of the south sideslope.
3:25 - General fill import concluded for the day.
4:15 - The contractor continued excavating ash from the sideslope in the southeast corner of the existing ash pond, moving towards the southern end of the east sideslope. Excavated material was hauled and dumped in the closure area. A dozer was also utilized to clean the sideslope.
5:15 - Crew used a Holmes Rollerbade to smooth out the ash in the upper level of the closure area.
6:00 - SCS staff assessed the east sideslope in the southeast corner of the existing ash pond to be cleared as clean. A section of the sideslope in the far southeast corner was cleared as clean. A few areas on the east sideslope required additional cleaning to remove remaining pockets of ash.
6:20 - SCS staff surveyed the section of sideslope that was cleared as clean. The contractor continued cleaning the sideslope of any remaining pockets of ash.
6:45 - The contractor used an excavator to place general fill on the cleared section of the sideslope.
6:50 - SCS staff left the site.

Material(s) Delivered to Site

General Fill

Construction Observer

Chris Calhoun

SCS ENGINEERS

DAILY FIELD ACTIVITIES REPORT

Client Name:	Ames Municipal Electric System	**Date:**	October 10, 2024
SCS Engineers Project Name:	Ames Ash Pond Closure	**Start Time:**	7:15 AM
SCS Engineers Project No:	27219356.02	**Stop Time:**	5:55 PM
Project Location:	Ames Municipal Electric System Ash Ponds Ames, Iowa		

Task: *Cleaned Excavation Clearing, General Fill Placement, Ash Placement, Cement Application*

Weather Information

83°, Sunny, Winds from SE at 8 mph

Contractors, Personnel, and Equipment On Site

Contractors: JB Holland Personnel: 4
Equipment: 1-John Deere 380G LC Excavator, 1-CAT D6N LGP Dozer, John Deere 624K Loader, Bobcat T770 Compact Track Loader, 2-CAT Dump Trucks, 1-ROME TAW-20S Wheel Offset Disc Harrow, 1-Fuel Truck, 1-CAT D6T LGP Dozer, 1-Water Truck, 1-CAT CP56B Compactor, 1-Hurricane HD3700 Drop Hammer, 1- John Deere 7800 Tractor, 1-Pull-behind sheepsfoot compactor with 7" pad length, 1-Pull-behind sheepsfoot compactor with 8" pad length, 1 -John Deere 755D Crawler Loader, 1-John Deere 310 Disk, 1-ROME Disc, 1-Stoltz Truck-Mounted Site Spreader, 1-Challenger MT765D Crawler Tractor, 1-CAT 140M Motor Grader, 1-Case IH MX270 Tractor, 1-Holmes Rollerblade 11M

Work Areas/Boundaries

Existing Ash Pond

Testing Equipment Used/Observed and Calibration/Re-Calibration Documentation

NA

Tests Completed/Observed

NA

Work Comments/Observations and Test Results

7:15 - SCS staff performed a final inspection of a section of the east sideslope to clear as clean. The section was cleared as clean.
7:40 - SCS staff surveyed the section of sideslope that was cleared as clean.
7:50 - General fill was delivered to the site and dumped at the top of the cleared section of east sideslope.
8:45 - The dozer operator spread out a lift of general fill on the east sideslope. After placement, the general fill was compacted with the self-propelled compactor. Two additional lifts were placed and compacted throughout the remainder of the morning.
10:45 - The contractor applied water to the periemeter roads for dust control.
11:30 - The dozer operator pushed broken pieces of concrete that were removed from the general fill to the top of the east sideslope. The broken concrete was loaded into a haul truck and returned to the source of the general fill.
1:45 - The contractor excavated ash material from the northeast corner of the existing ash pond. The excavated ash was placed in the upper level of the closure area.
2:15 - The dozer operator smoothed out the compacted general fill in the southeast corner of the existing ash pond.
3:45 - A load of cement was delivered to the site and loaded into the site spreader.
4:05 - The contractor applied cement powder to the ash in the upper level of the closure area.
4:50 - The contractor disked the cement into the ash in the upper level of the closure area.
5:10 - Crew used a skidloader to clean the perimeter roads.
5:25 - The dozer operator smoothed and sealed the ash in the upper level of the closure area.
5:55 - SCS staff and the contractor left the site.

Material(s) Delivered to Site

General Fill, Cement

Construction Observer

Chris Calhoun

SCS ENGINEERS

DAILY FIELD ACTIVITIES REPORT

Client Name:	Ames Municipal Electric System	**Date:**	October 14, 2024
SCS Engineers Project Name:	Ames Ash Pond Closure	**Start Time:**	8:40 AM
SCS Engineers Project No:	27219356.02	**Stop Time:**	5:50 PM
Project Location:	Ames Municipal Electric System Ash Ponds Ames, Iowa		

Task: *Winter Stormwater Ditch, Perimeter Berm for Containment Pits*

Weather Information

53°, Cloudy, Winds from N at 10 mph

Contractors, Personnel, and Equipment On Site

Contractors: JB Holland Personnel: 4
Equipment: 1-John Deere 380G LC Excavator, 1-CAT D6N LGP Dozer, John Deere 624K Loader, Bobcat T770 Compact Track Loader, 2-CAT Dump Trucks, 1-ROME TAW-20S Wheel Offset Disc Harrow, 1-Fuel Truck, 1-CAT D6T LGP Dozer, 1-Water Truck, 1-CAT CP56B Compactor, 1-Hurricane HD3700 Drop Hammer, 1-Pull-behind sheepsfoot compactor with 7" pad length, 1-Pull-behind sheepsfoot compactor with 8" pad length, 1 -John Deere 755D Crawler Loader, 1-John Deere 310 Disk, 1-ROME Disc, 1-Stoltz Truck-Mounted Site Spreader, 1-Challenger MT765D Crawler Tractor, 1-Case IH MX270 Tractor, 1-Holmes Rollerblade 11M

Work Areas/Boundaries

Existing Ash Pond

Testing Equipment Used/Observed and Calibration/Re-Calibration Documentation

NA

Tests Completed/Observed

NA

Work Comments/Observations and Test Results

8:40 - The contractor rolled the upper level of the closure area with a dump truck to compact the ash. Crew rolled the west and east sides of the closure area with the self-propelled compactor.
10:55 - The contractor began excavating the perimeter ditch for stormwater control during the winter season. Some of the excavated material was placed on the east side of the closure area. The remainder of the material was used to construct a perimeter berm for the proposed containment pits in the closure area. Excavation and grading of the perimeter ditch occured for the remainder of the day.
12:30 - The dozer operator began shaping the perimeter berm for the proposed containment pits in the closure area.
1:15 - The contractor compacted the perimeter berm with the self-propelled compactor. Throughout the afternoon, additional ash was placed and compacted to increase the height of the berm.
4:00 - An existing 6" metal pipe was encountered while excavating the perimeter ditch on the west side of the closure area. The pipe appeared to extend to the west under the access road towards the adjacent lime pond.
5:50 - SCS staff left the site.

Material(s) Delivered to Site

NA

Construction Observer

Chris Calhoun

SCS ENGINEERS

DAILY FIELD ACTIVITIES REPORT

Client Name:	Ames Municipal Electric System	**Date:**	October 15, 2024
SCS Engineers Project Name:	Ames Ash Pond Closure	**Start Time:**	8:30 AM
SCS Engineers Project No:	27219356.02	**Stop Time:**	6:00 PM
Project Location:	Ames Municipal Electric System Ash Ponds Ames, Iowa		

Task: *Containment Pit Excavation, Pond Excavation, Ash Placement, Bollard Repair, Winter Ditch Outlet*

Weather Information

57°, Sunny, Winds from NE at 10 mph

Contractors, Personnel, and Equipment On Site

Contractors: JB Holland Personnel: 7
Equipment: 1-John Deere 380G LC Excavator, 1-CAT D6N LGP Dozer, John Deere 624K Loader, Bobcat T770 Compact Track Loader, 2-CAT Dump Trucks, 1-ROME TAW-20S Wheel Offset Disc Harrow, 1-Fuel Truck, 1-CAT D6T LGP Dozer, 1-Water Truck, 1-CAT CP56B Compactor, 1-Hurricane HD3700 Drop Hammer, 1-Pull-behind sheepsfoot compactor with 7" pad length, 1-Pull-behind sheepsfoot compactor with 8" pad length, 1 -John Deere 755D Crawler Loader, 1-John Deere 310 Disk, 1-ROME Disc, 1-Stoltz Truck-Mounted Site Spreader, 1-Challenger MT765D Crawler Tractor, 1-Case IH MX270 Tractor, 1-Holmes Rollerblade 11M, 1-CAT 320F L Excavator

Work Areas/Boundaries

Existing Ash Pond

Testing Equipment Used/Observed and Calibration/Re-Calibration Documentation

NA

Tests Completed/Observed

NA

Work Comments/Observations and Test Results

8:30 - The contractor excavated material to create a containment pit in the center of the closure area. Excavated material was placed on the sides of the pit and on the east side of the closure area.
11:20 - Crew compacted the ash on the east side of the closure area with the self-propelled compactor.
11:45 - The contractor began placing wet ash material into the containment pit created in the closure area. The material was excavated from the east pond area. Material was hauled and placed in the containment pit for the remainder of the day.
12:45 - Crew compacted the ash placed around the perimeter of the containment pit.
1:30 - The contractor repaired the concrete bollard for the monitoring well on the north side of the site. Concrete was poured around the base of the bollard.
4:00 - The contractor excavated the trench for the installation of the perimeter ditch outlet pipes.
5:00 - The dozer operator moved around the material at the top of the containment pit in the closure area.
6:00 - SCS staff left the site.

Material(s) Delivered to Site

NA

Construction Observer

Chris Calhoun

SCS ENGINEERS

DAILY FIELD ACTIVITIES REPORT

Client Name:	Ames Municipal Electric System	**Date:**	October 16, 2024
SCS Engineers Project Name:	Ames Ash Pond Closure	**Start Time:**	8:20 AM
SCS Engineers Project No:	27219356.02	**Stop Time:**	5:45 PM
Project Location:	Ames Municipal Electric System Ash Ponds Ames, Iowa		

Task: *Containment Pit Excavation, Pond Excavation, Ash Placement, Winter Ditch Outlet, Pipe Removal*

Weather Information

61°, Sunny, Winds from S at 11 mph

Contractors, Personnel, and Equipment On Site

Contractors: JB Holland Personnel: 7
Equipment: 1-John Deere 380G LC Excavator, 1-CAT D6N LGP Dozer, John Deere 624K Loader, Bobcat T770 Compact Track Loader, 2-CAT Dump Trucks, 1-ROME TAW-20S Wheel Offset Disc Harrow, 1-Fuel Truck, 1-CAT D6T LGP Dozer, 1-Water Truck, 1-CAT CP56B Compactor, 1-Hurricane HD3700 Drop Hammer, 1-Pull-behind sheepsfoot compactor with 7" pad length, 1-Pull-behind sheepsfoot compactor with 8" pad length, 1 -John Deere 755D Crawler Loader, 1-John Deere 310 Disk, 1-ROME Disc, 1-Stoltz Truck-Mounted Site Spreader, 1-Challenger MT765D Crawler Tractor, 1-Case IH MX270 Tractor, 1-Holmes Rollerblade 11M, 1-CAT 320F L Excavator

Work Areas/Boundaries

Existing Ash Pond

Testing Equipment Used/Observed and Calibration/Re-Calibration Documentation

NA

Tests Completed/Observed

NA

Work Comments/Observations and Test Results

8:20 - The contractor excavated material to create another containment pit in the closure area. Excavated material was placed on the sides of the pit and on the north side of the closure area.
8:20 - The contractor installed three 7" HDPE pipes with shut-off valves to outlet stormwater from the perimeter ditch to the east clearwater pond during the winter season.
9:30 - The contractor backfilled the perimeter ditch outlet trench with clay fill. The clay fill was placed and compacted in lifts with a plate compactor.
9:45 - The contractor removed the existing 24" HDPE pipe from under the access road on the south side of the closure area. The pipe was hauled to the laydown area. The pipe trench was backfilled with clay and compacted.
9:45 - Crew extended the contact water cleanouts in the southwest corner of the closure area.
10:00 - The contractor performed a proof roll of the east side of the closure area. The proof roll passed.
10:30 - The contractor began placing wet ash material into the containment pit created in the closure area. The material was excavated from the east pond area.
11:30 - The contractor removed the existing 6" metal pipe from under the access road on the west side of the closure area. The pipe only extended to the midpoint of the access road. The pipe was hauled to the laydown area.
1:30 - The contractor used an excavator to move material around at the top of the containment pits in the closure area.
3:25 - The contractor began excavating another containment pit in the closure area.
4:30 - Crew used the Holmes Rollerblade to smooth the ash on the south and west sides of the closure area.
4:45 - The dozer operator spread out the excavated ash that had been placed on north side of the closure area. The ash was then compacted with the self-propelled compactor.
5:30 - The contractor compacted the ash berm on the north side of the containment pit.
5:40 - The contractor placed wet ash material in the newest containment pit. Material continued to be excavated from the east pond area.
5:45 - SCS staff left the site.

Material(s) Delivered to Site

NA

Construction Observer

Chris Calhoun

SCS ENGINEERS

DAILY FIELD ACTIVITIES REPORT

Client Name:	Ames Municipal Electric System	**Date:**	October 17, 2024
SCS Engineers Project Name:	Ames Ash Pond Closure	**Start Time:**	8:30 AM
SCS Engineers Project No:	27219356.02	**Stop Time:**	5:50 PM
Project Location:	Ames Municipal Electric System Ash Ponds Ames, Iowa		

Task: *Containment Pit Excavation, Pond Excavation, Ash Placement*

Weather Information

69°, Sunny, Winds from S at 20 mph

Contractors, Personnel, and Equipment On Site

Contractors: JB Holland Personnel: 4
Equipment: 1-John Deere 380G LC Excavator, 1-CAT D6N LGP Dozer, John Deere 624K Loader, Bobcat T770 Compact Track Loader, 2-CAT Dump Trucks, 1-ROME TAW-20S Wheel Offset Disc Harrow, 1-Fuel Truck, 1-CAT D6T LGP Dozer, 1-Water Truck, 1-CAT CP56B Compactor, 1-Hurricane HD3700 Drop Hammer, 1-Pull-behind sheepsfoot compactor with 7" pad length, 1-Pull-behind sheepsfoot compactor with 8" pad length, 1 -John Deere 755D Crawler Loader, 1-John Deere 310 Disk, 1-ROME Disc, 1-Stoltz Truck-Mounted Site Spreader, 1-Challenger MT765D Crawler Tractor, 1-Case IH MX270 Tractor, 1-Holmes Rollerblade 11M, 1-CAT 320F L Excavator

Work Areas/Boundaries

Existing Ash Pond

Testing Equipment Used/Observed and Calibration/Re-Calibration Documentation

NA

Tests Completed/Observed

NA

Work Comments/Observations and Test Results

8:30 - The contractor continued placing wet ash material in one of the containment pits in the closure area. The material was excavated from the east pond area.
10:45 - The contractor excavated material to create another containment pit in the closure area. Excavated material was placed on the sides of the pit and on the east and west sides of the closure area.
12:00 - The ash material placed on the east side of the closure area was spread out with a dozer and compacted with the self-propelled compactor.
1:00 - The contractor graded and compacted the ash that was placed on the north side of the containment pit.
1:30 - The ash material placed on the west side of the closure area was spread out with a dozer and compacted with the self-propelled compactor.
1:55 - The contractor began placing wet ash material into the newly created containment pit in the closure area. The material was excavated from the east pond area. This continued for the remainder of the day.
4:00 - The contractor used an excavator to move material around on the top of the containment pits.
5:50 - SCS staff left the site.

Material(s) Delivered to Site

NA

Construction Observer

Chris Calhoun

SCS ENGINEERS

DAILY FIELD ACTIVITIES REPORT

Client Name:	Ames Municipal Electric System	**Date:**	October 21, 2024
SCS Engineers Project Name:	Ames Ash Pond Closure	**Start Time:**	8:45 AM
SCS Engineers Project No:	27219356.02	**Stop Time:**	5:50 PM
Project Location:	Ames Municipal Electric System Ash Ponds Ames, Iowa		

Task: *Containment Pit Excavation, Pond Excavation, Ash Placement*

Weather Information

81°, Partly Cloudy, Winds from S at 16 mph

Contractors, Personnel, and Equipment On Site

Contractors: JB Holland Personnel: 4
Equipment: 1-John Deere 380G LC Excavator, 1-CAT D6N LGP Dozer, John Deere 624K Loader, Bobcat T770 Compact Track Loader, 2-CAT Dump Trucks, 1-ROME TAW-20S Wheel Offset Disc Harrow, 1-Fuel Truck, 1-CAT D6T LGP Dozer, 1-Water Truck, 1-CAT CP56B Compactor, 1-Hurricane HD3700 Drop Hammer, 1-Pull-behind sheepsfoot compactor with 7" pad length, 1-Pull-behind sheepsfoot compactor with 8" pad length, 1 -John Deere 755D Crawler Loader, 1-John Deere 310 Disk, 1-ROME Disc, 1-Stoltz Truck-Mounted Site Spreader, 1-Challenger MT765D Crawler Tractor, 1-Case IH MX270 Tractor, 1-Holmes Rollerblade 11M, 1-CAT 320F L Excavator

Work Areas/Boundaries

Existing Ash Pond

Testing Equipment Used/Observed and Calibration/Re-Calibration Documentation

NA

Tests Completed/Observed

NA

Work Comments/Observations and Test Results

8:45 - The contractor continued placing wet ash material in one of the containment pits in the closure area. The material was excavated from the east pond area. The contractor used an excavator to move material around on the top of the containment pits.
11:00 - The contractor excavated material to create another containment pit in the closure area. Excavated material was placed on the sides of the pit and on the south, west, and east sides of the closure area.
11:40 - The ash material placed on the south and west sides of the closure area was spread out with a dozer and compacted with the self-propelled compactor.
12:00 - The contractor graded and compacted the ash that was placed on the north side of the containment pit.
12:20 - The dozer operator graded the top of the southern containment pits in the closure area to ensure positive drainage.
12:45 - The ash material placed on the east side of the closure area was spread out with a dozer and compacted with the self-propelled compactor.
1:10 - The contractor began placing wet ash material into the newly created containment pit in the closure area. The material was excavated from the east pond area. This continued for the remainder of the day.
4:30 - The contractor used an excavator to move material around on the top of the containment pits.
5:00 - The dozer operator continued to grade the top of the southern containment pits.
5:50 - SCS staff left the site.

Material(s) Delivered to Site

NA

Construction Observer

Chris Calhoun

SCS ENGINEERS

DAILY FIELD ACTIVITIES REPORT

Client Name:	Ames Municipal Electric System	**Date:**	October 22, 2024
SCS Engineers Project Name:	Ames Ash Pond Closure	**Start Time:**	8:15 AM
SCS Engineers Project No:	27219356.02	**Stop Time:**	5:30 PM
Project Location:	Ames Municipal Electric System Ash Ponds Ames, Iowa		

Task: *Containment Pit Excavation, Pond Excavation, Ash Placement*

Weather Information

74°, Sunny, Winds from W at 14 mph

Contractors, Personnel, and Equipment On Site

Contractors: JB Holland Personnel: 4
Equipment: 1-John Deere 380G LC Excavator, 1-CAT D6N LGP Dozer, John Deere 624K Loader, Bobcat T770 Compact Track Loader, 2-CAT Dump Trucks, 1-ROME TAW-20S Wheel Offset Disc Harrow, 1-Fuel Truck, 1-CAT D6T LGP Dozer, 1-Water Truck, 1-CAT CP56B Compactor, 1-Hurricane HD3700 Drop Hammer, 1-Pull-behind sheepsfoot compactor with 7" pad length, 1-Pull-behind sheepsfoot compactor with 8" pad length, 1 -John Deere 755D Crawler Loader, 1-John Deere 310 Disk, 1-ROME Disc, 1-Stoltz Truck-Mounted Site Spreader, 1-Challenger MT765D Crawler Tractor, 1-Case IH MX270 Tractor, 1-Holmes Rollerblade 11M, 1-CAT 320F L Excavator

Work Areas/Boundaries

Existing Ash Pond

Testing Equipment Used/Observed and Calibration/Re-Calibration Documentation

NA

Tests Completed/Observed

NA

Work Comments/Observations and Test Results

8:15 - The contractor excavated ash material from the northeast corner of the existing ash pond. The excavated material was placed on the south and east sides of the closure area.
9:45 - The contractor excavated material to create another containment pit in the closure area. Excavated material was placed on the north side of the pit and on the east side of the closure area.
11:00 - The contractor graded and compacted the ash that was placed on the north side of the containment pit.
11:30 - Crew used a skidloader to clean up the perimeter roads.
12:30 - The contractor began placing wet ash material into the newly created containment pit in the closure area. The material was excavated from the east pond area. This continued for a majority of the remainder of the day.
3:30 - The contractor used an excavator to move material around on the top of the containment pits.
5:00 - The contractor began placing a lift of ash material on the west side of the closure area.
5:30 - SCS staff left the site.

Material(s) Delivered to Site

NA

Construction Observer

Chris Calhoun

SCS ENGINEERS

DAILY FIELD ACTIVITIES REPORT

Client Name:	Ames Municipal Electric System	**Date:**	October 23, 2024
SCS Engineers Project Name:	Ames Ash Pond Closure	**Start Time:**	8:30 AM
SCS Engineers Project No:	27219356.02	**Stop Time:**	5:15 PM
Project Location:	Ames Municipal Electric System Ash Ponds Ames, Iowa		

Task: *Pond Excavation, Ash Placement , Perimeter Ditch*

Weather Information

61°, Sunny, Winds from NW at 13 mph

Contractors, Personnel, and Equipment On Site

Contractors: JB Holland Personnel: 4
Equipment: 1-John Deere 380G LC Excavator, 1-CAT D6N LGP Dozer, John Deere 624K Loader, Bobcat T770 Compact Track Loader, 2-CAT Dump Trucks, 1-ROME TAW-20S Wheel Offset Disc Harrow, 1-Fuel Truck, 1-CAT D6T LGP Dozer, 1-Water Truck, 1-Hurricane HD3700 Drop Hammer, 1-Pull-behind sheepsfoot compactor with 7" pad length, 1-Pull-behind sheepsfoot compactor with 8" pad length, 1 - John Deere 755D Crawler Loader, 1-John Deere 310 Disk, 1-ROME Disc, 1-Stoltz Truck-Mounted Site Spreader, 1-Challenger MT765D Crawler Tractor, 1-Case IH MX270 Tractor, 1-Holmes Rollerblade 11M, 1-CAT 320F L Excavator

Work Areas/Boundaries

Existing Ash Pond

Testing Equipment Used/Observed and Calibration/Re-Calibration Documentation

NA

Tests Completed/Observed

NA

Work Comments/Observations and Test Results

8:30 - The contractor continued placing a lift of ash material on the west, south, and east sides of the closure area. The material was excavated from the east pond area.
8:45 - The contractor began piling excavated material in the northeast corner of the closure area. This activity continued for the remainder of the morning and afternoon.
10:45 - The contractor moved material around on the top of the containment pits in the closure area.
11:00 - Crew used a skidloader to remove dust from the perimeter roads. This activity continued throughout the afternoon.
12:00 - The contractor used a dozer to clear ash from the sideslope on the east side of the existing ash pond. The dozer operator also baled wet ash material from the bottom of the existing ash pond.
4:30 - The contractor removed the pump near the existing ash pond outlet.
5:10 - The contractor worked on grading the perimeter ditch on the north side of the closure area.
5:15 - SCS staff left the site.

Material(s) Delivered to Site

NA

Construction Observer

Chris Calhoun

SCS ENGINEERS

DAILY FIELD ACTIVITIES REPORT

Client Name:	Ames Municipal Electric System	**Date:**	October 24, 2024
SCS Engineers Project Name:	Ames Ash Pond Closure	**Start Time:**	8:30 AM
SCS Engineers Project No:	27219356.02	**Stop Time:**	12:30 PM
Project Location:	Ames Municipal Electric System Ash Ponds Ames, Iowa		

Task: *Final Winterization Cleanup*

Weather Information

66°, Sunny, Winds from SE at 15 mph

Contractors, Personnel, and Equipment On Site

Contractors: JB Holland Personnel: 4
Equipment: 1-John Deere 380G LC Excavator, 1-CAT D6N LGP Dozer, John Deere 624K Loader, Bobcat T770 Compact Track Loader, 2-CAT Dump Trucks, 1-ROME TAW-20S Wheel Offset Disc Harrow, 1-Fuel Truck, 1-CAT D6T LGP Dozer, 1-Water Truck, 1-Hurricane HD3700 Drop Hammer, 1-Pull-behind sheepsfoot compactor with 7" pad length, 1-Pull-behind sheepsfoot compactor with 8" pad length, 1 - John Deere 755D Crawler Loader, 1-John Deere 310 Disk, 1-ROME Disc, 1-Stoltz Truck-Mounted Site Spreader, 1-Challenger MT765D Crawler Tractor, 1-Case IH MX270 Tractor, 1-Holmes Rollerblade 11M, 1-CAT 320F L Excavator

Work Areas/Boundaries

Existing Ash Pond

Testing Equipment Used/Observed and Calibration/Re-Calibration Documentation

NA

Tests Completed/Observed

NA

Work Comments/Observations and Test Results

8:30 - The contractor used a dozer to smooth the wet ash material on the perimeter of the closure area.
9:30 - The dozer operator graded the top of the containment pits in the closure area to ensure positive drainage.
10:00 - The contractor graded a small v-ditch around the perimeter of the piled ash material in the northeast corner of the existing ash pond.
10:30 - The dozer operator smoothed the wet ash material on the bottom of the existing pond on the east side of the site.
12:30 - SCS staff left the site.

Material(s) Delivered to Site

NA

Construction Observer

Chris Calhoun

SCS ENGINEERS

DAILY FIELD ACTIVITIES REPORT

Client Name:	Ames Municipal Electric System	**Date:**	March 27, 2025
SCS Engineers Project Name:	Ames Ash Pond Closure	**Start Time:**	8:00 AM
SCS Engineers Project No:	27219356.02	**Stop Time:**	11:15 AM
Project Location:	Ames Municipal Electric System Ash Ponds Ames, Iowa		

Task: *Proof Roll, Ash Conditioning, Background Soil Sampling*

Weather Information

48°, Cloudy, Winds from SE at 10 mph

Contractors, Personnel, and Equipment On Site

Contractors: JB Holland Personnel: 1
Equipment: 1-Hitachi Xaxis 350 LC Excavator, 1-CAT D6N LGP Dozer, 1-CAT D6K2 LGP Dozer, Bobcat T770 Compact Track Loader, 2-CAT Dump Trucks, 1-CAT CP56B Compactor, 1-Challenger MT765D Crawler Tractor, 1-Pull-behind sheepsfoot compactor, 1 -John Deere 755D Crawler Loader, 1-ROME TAW-20S Wheel Offset Disc Harrow, 1-John Deere 310 Disk, 1-ROME Disc, 1-Stoltz Truck-Mounted Site Spreader, 1-Fuel Truck, 1-Holmes Rollerblade 11M

Work Areas/Boundaries

Existing Ash Pond

Testing Equipment Used/Observed and Calibration/Re-Calibration Documentation

NA

Tests Completed/Observed

NA

Work Comments/Observations and Test Results

8:45 - The contractor performed a proof roll of the east, west, and south perimeter sides of the closure area. The proof roll passed.
9:45 - SCS staff used a hand auger to obtain background soil samples at the city park located to the north of the project site. Background samples were taken at two locations. At each location, a sample was taken at 1-2 ft depth and 2-3 ft depth. The soil from the 1-2 ft depth was mixed together and a portion was placed in a 4oz unpreserved glass jar. The same was done for the soil taken from the 2-3 ft depth.
11:00 - The contractor used a dozer to move wet ash material around in the bottom of the east pond area.
11:15 - SCS staff left the site.

Material(s) Delivered to Site

NA

Construction Observer

Chris Calhoun

SCS ENGINEERS

DAILY FIELD ACTIVITIES REPORT

Client Name:	Ames Municipal Electric System	**Date:**	March 28, 2025
SCS Engineers Project Name:	Ames Ash Pond Closure	**Start Time:**	11:30 AM
SCS Engineers Project No:	27219356.02	**Stop Time:**	2:30 PM
Project Location:	Ames Municipal Electric System Ash Ponds Ames, Iowa		

Task: *Ash Excavation, Ash Placement*

Weather Information

80°, Sunny, Winds from SW at 30 mph

Contractors, Personnel, and Equipment On Site

Contractors: JB Holland Personnel: 4
Equipment: 1-Hitachi Xaxis 350 LC Excavator, 1-CAT D6N LGP Dozer, 1-CAT D6K2 LGP Dozer, Bobcat T770 Compact Track Loader, 2-CAT Dump Trucks, 1-CAT CP56B Compactor, 1-Challenger MT765D Crawler Tractor, 1-Pull-behind sheepsfoot compactor, 1 -John Deere 755D Crawler Loader, 1-ROME TAW-20S Wheel Offset Disc Harrow, 1-John Deere 310 Disk, 1-ROME Disc, 1-Stoltz Truck-Mounted Site Spreader, 1-Fuel Truck, 1-Holmes Rollerblade 11M

Work Areas/Boundaries

Existing Ash Pond

Testing Equipment Used/Observed and Calibration/Re-Calibration Documentation

NA

Tests Completed/Observed

NA

Work Comments/Observations and Test Results

11:30 - The contractor excavated ash from the stockpile in the northeast corner of the existing ash pond. The ash was hauled and placed in piles around the perimeter of the closure area. Later on, excavated ash was placed in a containment pit located on the south side of the upper level of the closure area.
12:00 - The contractor used a dozer to shape the ash piled on the perimeter of the closure area for better drainage.
12:30 - SCS staff used a hand auger to pull up ash that was placed in containment pits in the closure area at the end of the 2024 construction season. Ash was pulled up in 6" increments and assessed for moisture content and structure. This was done at three different locations. The top 1-2 feet of ash had a higher moisture content but generally held its shape within the auger. The ash taken from a depth of 2-3 feet had a noticeably lower moisture content.
2:15 - The contractor finished ash placement for the day and began to seal and smooth the closure area with a dozer and a Holmes Rollerblade to prepare for expected rain over the weekend.
2:30 - SCS staff left the site.

Material(s) Delivered to Site

NA

Construction Observer

Chris Calhoun

SCS ENGINEERS

DAILY FIELD ACTIVITIES REPORT

Client Name:	Ames Municipal Electric System	**Date:**	March 31, 2025
SCS Engineers Project Name:	Ames Ash Pond Closure	**Start Time:**	10:30 AM
SCS Engineers Project No:	27219356.02	**Stop Time:**	5:00 PM
Project Location:	Ames Municipal Electric System Ash Ponds Ames, Iowa		

Task: *Containment Pit Excavation, Ash Excavation, Ash Placement*

Weather Information

49°, Partly Cloudy, Winds from NW at 9 mph

Contractors, Personnel, and Equipment On Site

Contractors: JB Holland Personnel: 4
Equipment: 1-Hitachi Xaxis 350 LC Excavator, 1-CAT D6N LGP Dozer, 1-CAT D6K2 LGP Dozer, Bobcat T770 Compact Track Loader, 2-CAT Dump Trucks, 1-CAT CP56B Compactor, 1-Challenger MT765D Crawler Tractor, 1-Pull-behind sheepsfoot compactor, 1 -John Deere 755D Crawler Loader, 1-ROME TAW-20S Wheel Offset Disc Harrow, 1-John Deere 310 Disk, 1-ROME Disc, 1-Stoltz Truck-Mounted Site Spreader, 1-Fuel Truck, 1-Holmes Rollerblade 11M

Work Areas/Boundaries

Existing Ash Pond

Testing Equipment Used/Observed and Calibration/Re-Calibration Documentation

NA

Tests Completed/Observed

NA

Work Comments/Observations and Test Results

10:30 - The contractor excavated ash from the northeast corner of the existing ash pond. The contractor continued placing the exacavated ash material in the containment pit located on the south side of the upper level of the closure area.
1:15 - The contractor finished filling the containment pit with ash material and began excavting another pit immediately to the north of the previous. Ash excavated from the creation of the containment pit was dumped on the western perimeter of the closure area and spread out with a dozer.
3:45 - The contractor continued excavating ash from the northeast corner of the existing ash pond. The excavated ash was initially placed in the newly created containment pit. After about an hour, the contractor began placing excavated ash on the south and east perimeters of the closure area.
4:40 - The contractor used a dozer to move around and dewater the bottom layer of ash in the eastern portion of the pond.
5:00 - SCS staff left the site.

Material(s) Delivered to Site

NA

Construction Observer

Chris Calhoun

SCS ENGINEERS

DAILY FIELD ACTIVITIES REPORT

Client Name:	Ames Municipal Electric System	**Date:**	April 7, 2025
SCS Engineers Project Name:	Ames Ash Pond Closure	**Start Time:**	8:45 AM
SCS Engineers Project No:	27219356.02	**Stop Time:**	5:00 PM
Project Location:	Ames Municipal Electric System Ash Ponds Ames, Iowa		

Task: *Containment Pit Excavation, Ash Excavation, Ash Placement*

Weather Information

45°, Fair, Winds from N at 15-20 mph

Contractors, Personnel, and Equipment On Site

Contractors: JB Holland Personnel: 4
Equipment: 1-Hitachi Xaxis 350 LC Excavator, 1-CAT D6N LGP Dozer, 1-CAT D6K2 LGP Dozer, Bobcat T770 Compact Track Loader, 2-CAT Dump Trucks, 1-CAT CP56B Compactor, 1-Challenger MT765D Crawler Tractor, 1-Pull-behind sheepsfoot compactor, 1 -John Deere 755D Crawler Loader, 1-ROME TAW-20S Wheel Offset Disc Harrow, 1-John Deere 310 Disk, 1-ROME Disc, 1-Stoltz Truck-Mounted Site Spreader, 1-Fuel Truck, 1-Holmes Rollerblade 11M

Work Areas/Boundaries

Existing Ash Pond

Testing Equipment Used/Observed and Calibration/Re-Calibration Documentation

NA

Tests Completed/Observed

NA

Work Comments/Observations and Test Results

8:45 - The contractor rolled the perimeter of the closure area with the self-propelled compactor.
9:00 - The contractor excavated ash from the northeast corner of the existing ash pond. The contractor placed the exacavated ash material in a containment pit located in the upper level of the closure area.
9:20 - The contractor performed a proof roll of the lower perimeter of the closure area. The proof roll passed.
11:30 - The contractor used a dozer to shape the top of the southernmost containment pit.
1:00 - The contractor finished filling the current containment pit with ash material and began excavating another pit immediately to the north of the previous. Ash excavated from the creation of the containment pit was dumped around the perimeter of the closure area and spread out with a dozer.
4:00 - The contractor continued excavating ash from the northeast corner of the existing ash pond. The excavated ash was placed in the newly created containment pit.
5:00 - SCS staff left the site.

Material(s) Delivered to Site

NA

Construction Observer

Chris Calhoun

SCS ENGINEERS

DAILY FIELD ACTIVITIES REPORT

Client Name:	Ames Municipal Electric System	**Date:**	April 8, 2025
SCS Engineers Project Name:	Ames Ash Pond Closure	**Start Time:**	9:15 AM
SCS Engineers Project No:	27219356.02	**Stop Time:**	5:00 PM
Project Location:	Ames Municipal Electric System Ash Ponds Ames, Iowa		

Task: *Containment Pit Excavation, Ash Excavation, Ash Placement, Ash Conditioning*

Weather Information

52°, Sunny, Winds from SE at 10 mph

Contractors, Personnel, and Equipment On Site

Contractors: JB Holland Personnel: 4
Equipment: 1-Hitachi Xaxis 350 LC Excavator, 1-CAT D6N LGP Dozer, 1-CAT D6K2 LGP Dozer, Bobcat T770 Compact Track Loader, 2-CAT Dump Trucks, 1-CAT CP56B Compactor, 1-Challenger MT765D Crawler Tractor, 1-Pull-behind sheepsfoot compactor, 1 -John Deere 755D Crawler Loader, 1-ROME TAW-20S Wheel Offset Disc Harrow, 1-John Deere 310 Disk, 1-ROME Disc, 1-Stoltz Truck-Mounted Site Spreader, 1-Fuel Truck, 1-Holmes Rollerblade 11M

Work Areas/Boundaries

Existing Ash Pond

Testing Equipment Used/Observed and Calibration/Re-Calibration Documentation

NA

Tests Completed/Observed

NA

Work Comments/Observations and Test Results

9:15 - The contractor excavated ash from the northeast corner of the existing ash pond. The contractor continued placing the exacavated ash material in a containment pit located in the upper level of the closure area.
11:55 - The contractor disked the ash around the lower perimeter of the closure area.
12:00 - The contractor finished filling the current containment pit with ash material and began excavating another pit immediately to the north of the previous. Ash excavated from the creation of the containment pit was dumped on the west side of the closure area and spread out with a dozer.
12:05 - The dozer operator bailed ash material from the bottom of the pond towards the current face of the excavation.
2:00 - The contractor continued excavating ash from the northeast corner of the existing ash pond. The excavated ash was placed in the newly created containment pit.
3:30 - The contractor disked the ash around the lower perimeter of the closure area.
5:00 - SCS staff left the site.

Material(s) Delivered to Site

NA

Construction Observer

Chris Calhoun

SCS ENGINEERS

DAILY FIELD ACTIVITIES REPORT

Client Name:	Ames Municipal Electric System	**Date:**	April 9, 2025
SCS Engineers Project Name:	Ames Ash Pond Closure	**Start Time:**	8:45 AM
SCS Engineers Project No:	27219356.02	**Stop Time:**	5:00 PM
Project Location:	Ames Municipal Electric System Ash Ponds Ames, Iowa		

Task: *Containment Pit Excavation, Ash Excavation, Ash Placement, Ash Conditioning*

Weather Information

64°, Partly Cloudy, Winds from NW at 8 mph

Contractors, Personnel, and Equipment On Site

Contractors: JB Holland Personnel: 4
Equipment: 1-Hitachi Xaxis 350 LC Excavator, 1-CAT D6N LGP Dozer, 1-CAT D6K2 LGP Dozer, Bobcat T770 Compact Track Loader, 2-CAT Dump Trucks, 1-CAT CP56B Compactor, 1-Challenger MT765D Crawler Tractor, 1-Pull-behind sheepsfoot compactor, 1 -John Deere 755D Crawler Loader, 1-ROME TAW-20S Wheel Offset Disc Harrow, 1-John Deere 310 Disk, 1-ROME Disc, 1-Stoltz Truck-Mounted Site Spreader, 1-Fuel Truck, 1-Holmes Rollerblade 11M

Work Areas/Boundaries

Existing Ash Pond

Testing Equipment Used/Observed and Calibration/Re-Calibration Documentation

NA

Tests Completed/Observed

NA

Work Comments/Observations and Test Results

9:00 - The contractor excavated ash from the northeast corner of the existing ash pond. The contractor continued placing the exacavated ash material in a containment pit located in the upper level of the closure area.
9:30 - The contractor disked the ash around the lower perimeter of the closure area.
9:40 - The contractor finished filling the current containment pit with ash material and began excavating another pit immediately to the north of the previous. Ash excavated from the creation of the containment pit was stockpiled near the northwest corner of the closure area.
10:30 - The contractor used a dozer to smooth and shape the top of the containment pits.
12:30 - The contractor continued excavating ash from the northeast corner of the existing ash pond. The excavated ash was placed in the newly created containment pit.
2:00 - The contractor disked the ash around the lower perimeter of the closure area.
4:15 - The dozer operator continued shaping the top of the containment pits.
5:00 - SCS staff left the site.

Material(s) Delivered to Site

NA

Construction Observer

Chris Calhoun

SCS ENGINEERS

DAILY FIELD ACTIVITIES REPORT

Client Name:	Ames Municipal Electric System	**Date:**	April 10, 2025
SCS Engineers Project Name:	Ames Ash Pond Closure	**Start Time:**	2:15 PM
SCS Engineers Project No:	27219356.02	**Stop Time:**	4:45 PM
Project Location:	Ames Municipal Electric System Ash Ponds Ames, Iowa		

Task: *Ash Placement*

Weather Information

61°, Cloudy, Winds from NW at 20 mph

Contractors, Personnel, and Equipment On Site

Contractors: JB Holland Personnel: 2
Equipment: 1-Hitachi Xaxis 350 LC Excavator, 1-CAT D6N LGP Dozer, 1-CAT D6K2 LGP Dozer, Bobcat T770 Compact Track Loader, 2-CAT Dump Trucks, 1-CAT CP56B Compactor, 1-Challenger MT765D Crawler Tractor, 1-Pull-behind sheepsfoot compactor, 1 -John Deere 755D Crawler Loader, 1-ROME TAW-20S Wheel Offset Disc Harrow, 1-John Deere 310 Disk, 1-ROME Disc, 1-Stoltz Truck-Mounted Site Spreader, 1-Fuel Truck, 1-Holmes Rollerblade 11M

Work Areas/Boundaries

Existing Ash Pond

Testing Equipment Used/Observed and Calibration/Re-Calibration Documentation

NA

Tests Completed/Observed

NA

Work Comments/Observations and Test Results

2:15 - The contractor exacavated material from the top of the containment pits and placed it in piles around the lower perimeter of the closure area. The material was spread out with a dozer.
4:45 - SCS staff left the site.

Material(s) Delivered to Site

NA

Construction Observer

Chris Calhoun

SCS ENGINEERS

DAILY FIELD ACTIVITIES REPORT

Client Name:	Ames Municipal Electric System	**Date:**	April 11, 2025
SCS Engineers Project Name:	Ames Ash Pond Closure	**Start Time:**	1:00 PM
SCS Engineers Project No:	27219356.02	**Stop Time:**	2:30 PM
Project Location:	Ames Municipal Electric System Ash Ponds Ames, Iowa		

Task: *Cement Application, Ash Conditioning*

Weather Information

50°, Partly Cloudy, Winds from NE at 7 mph

Contractors, Personnel, and Equipment On Site

Contractors: JB Holland Personnel: 2
Equipment: 1-Hitachi Xaxis 350 LC Excavator, 1-CAT D6N LGP Dozer, 1-CAT D6K2 LGP Dozer, Bobcat T770 Compact Track Loader, 2-CAT Dump Trucks, 1-CAT CP56B Compactor, 1-Challenger MT765D Crawler Tractor, 1-Pull-behind sheepsfoot compactor, 1 -John Deere 755D Crawler Loader, 1-ROME TAW-20S Wheel Offset Disc Harrow, 1-John Deere 310 Disk, 1-ROME Disc, 1-Stoltz Truck-Mounted Site Spreader, 1-Fuel Truck, 1-Holmes Rollerblade 11M

Work Areas/Boundaries

Existing Ash Pond

Testing Equipment Used/Observed and Calibration/Re-Calibration Documentation

NA

Tests Completed/Observed

NA

Work Comments/Observations and Test Results

1:00 - The contractor disked the ash around the lower perimeter of the closure area. Cement had been applied to the ash in this area earlier in the day.
1:45 - The contractor used a dozer and a Holmes Rollerblade to smooth and seal the lower perimeter of the closure area.
2:30 - The contractor and SCS staff left the site.

Material(s) Delivered to Site

Cement

Construction Observer

Chris Calhoun

SCS ENGINEERS

DAILY FIELD ACTIVITIES REPORT

Client Name:	Ames Municipal Electric System	**Date:**	April 14, 2025
SCS Engineers Project Name:	Ames Ash Pond Closure	**Start Time:**	9:00 AM
SCS Engineers Project No:	27219356.02	**Stop Time:**	5:30 PM
Project Location:	Ames Municipal Electric System Ash Ponds Ames, Iowa		

Task: *Containment Pit Excavation, Ash Excavation, Ash Placement, Ash Conditioning*

Weather Information

60°, Cloudy, Winds from NW at 25 mph

Contractors, Personnel, and Equipment On Site

Contractors: JB Holland Personnel: 4
Equipment: 1-Hitachi Xaxis 350 LC Excavator, 1-CAT D6N LGP Dozer, 1-CAT D6K2 LGP Dozer, Bobcat T770 Compact Track Loader, 2-CAT Dump Trucks, 1-CAT CP56B Compactor, 1-Challenger MT765D Crawler Tractor, 1-Pull-behind sheepsfoot compactor, 1 -John Deere 755D Crawler Loader, 1-ROME TAW-20S Wheel Offset Disc Harrow, 1-John Deere 310 Disk, 1-ROME Disc, 1-Stoltz Truck-Mounted Site Spreader, 1-Fuel Truck, 1-Holmes Rollerblade 11M

Work Areas/Boundaries

Existing Ash Pond

Testing Equipment Used/Observed and Calibration/Re-Calibration Documentation

NA

Tests Completed/Observed

NA

Work Comments/Observations and Test Results

9:00 - The contractor rolled the perimeter of the closure area with the self-propelled compactor.
9:30 - The contractor used a dozer to smooth and shape the top of the containment pits.
10:00 - The contractor performed a proof roll of the perimeter of the closure area. The proof roll passed.
11:00 - The contractor used an excavator to begin pulling ash grades back on the west side of the closure area to more closely align with the final grades. The ash that was pulled back was piled on the western perimeter of the closure area and spread out with a dozer.
11:30 - The dozer operator scraped a layer of ash from the top of the containment pits to spread out on the perimeter of the closure area.
12:00 - The contractor placed a lift of ash between the separation berm and the current east toe of the closure area, still maintaining space for stormwater drainage.
1:00 - The dozer operator shaped the slope on the west side of the closure area.
1:30 - The excavator began pulling back grades on the south side of the closure area.
1:45 - The contractor used the self-propelled compactor to compact the ash on the west slope and the ash that was spread out along the western perimeter at the top of the slope.
2:00 - The dozer shaped a portion of the southern closure area slope.
3:00 - The contractor performed a proof roll on the western perimeter and a portion of the southern perimeter of the closure area. The proof roll passed with the exception of one small area. The ash in that area was cored out, replaced with dryer material, and recompacted.
3:00 - SCS staff surveyed the current closure area grades.
3:45 - The small section that failed the previous proof roll was tested again. The proof roll passed.
4:30 - The contractor began spreading out another lift of ash on the perimeter of the closure area.
5:30 - SCS staff left the site.

Material(s) Delivered to Site

NA

Construction Observer

Chris Calhoun

SCS ENGINEERS

DAILY FIELD ACTIVITIES REPORT

Client Name:	Ames Municipal Electric System	**Date:**	April 15, 2025
SCS Engineers Project Name:	Ames Ash Pond Closure	**Start Time:**	8:45 AM
SCS Engineers Project No:	27219356.02	**Stop Time:**	5:15 PM
Project Location:	Ames Municipal Electric System Ash Ponds Ames, Iowa		

Task: *Cement Application, Ash Excavation*

Weather Information

61°, Sunny, Winds from NW at 20 mph

Contractors, Personnel, and Equipment On Site

Contractors: JB Holland Personnel: 4
Equipment: 1-Hitachi Xaxis 350 LC Excavator, 1-CAT D6N LGP Dozer, 1-CAT D6K2 LGP Dozer, Bobcat T770 Compact Track Loader, 2-CAT Dump Trucks, 1-CAT CP56B Compactor, 1-Challenger MT765D Crawler Tractor, 1-Pull-behind sheepsfoot compactor, 1 -John Deere 755D Crawler Loader, 1-ROME TAW-20S Wheel Offset Disc Harrow, 1-John Deere 310 Disk, 1-ROME Disc, 1-Stoltz Truck-Mounted Site Spreader, 1-Fuel Truck, 1-Holmes Rollerblade 11M

Work Areas/Boundaries

Existing Ash Pond

Testing Equipment Used/Observed and Calibration/Re-Calibration Documentation

NA

Tests Completed/Observed

NA

Work Comments/Observations and Test Results

8:45 - The contractor applied cement to the ash around the perimeter of the closure area.
9:00 - The contractor disked the cement into the ash.
9:00 - The contractor used a dozer to clean the bottom layer of ash from the pond floor. The ash material was pushed to the east sideslope of the pond.
10:30 - The contractor excavated ash from the east sideslope of the pond.The excavated material was stockpiled in the northwest corner of the closure area.
11:15 - The dozer operator began cleaning the east sideslope of the pond.
12:30 - The contractor began cleaning ash-impacted clay from the southern portion of the pond. Cleaning of the pond floor and sideslopes continued for the remainder of the day.

Material(s) Delivered to Site

Cement

Construction Observer

Chris Calhoun

SCS ENGINEERS

DAILY FIELD ACTIVITIES REPORT

Client Name:	Ames Municipal Electric System	**Date:**	April 16, 2025
SCS Engineers Project Name:	Ames Ash Pond Closure	**Start Time:**	9:30 AM
SCS Engineers Project No:	27219356.02	**Stop Time:**	5:45 PM
Project Location:	Ames Municipal Electric System Ash Ponds Ames, Iowa		

Task: *Cleaned Excavation Clearing, Ash Excavation, Ash Placement*

Weather Information

74°, Mostly Cloudy, Winds from SE at 18 mph

Contractors, Personnel, and Equipment On Site

Contractors: JB Holland Personnel: 5
Equipment: 1-Hitachi Xaxis 350 LC Excavator, 1-CAT D6N LGP Dozer, 1-CAT D6K2 LGP Dozer, 1-CAT D6 XE Dozer, Bobcat T770 Compact Track Loader, 2-CAT Dump Trucks, 1-CAT CP56B Compactor, 1-Challenger MT765D Crawler Tractor, 1-Pull-behind sheepsfoot compactor, 1-John Deere 755D Crawler Loader, 1-ROME TAW-20S Wheel Offset Disc Harrow, 1-John Deere 310 Disk, 1-ROME Disc, 1-Stoltz Truck-Mounted Site Spreader, 1-Fuel Truck, 1-Holmes Rollerblade 11M

Work Areas/Boundaries

Existing Ash Pond

Testing Equipment Used/Observed and Calibration/Re-Calibration Documentation

NA

Tests Completed/Observed

NA

Work Comments/Observations and Test Results

9:30 - The contractor continued cleaning ash and ash-impacted clay from the pond floor and east sideslope. SCS staff began to visually inspect areas as they were cleared to assess whether they could be considered clean. The boundary of areas that were considered to be clean were marked with green utility flags. Excavated ash and ash-impacted clay were stockpiled on the north side of the closure area.
1:00 - The contractor began cleaning the southern sideslope of the pond, near the separation berm. The contractor continued cleaning the pond floor and sideslopes for the remainder of the day.
1:45 - The contractor applied water to the perimeter roads for dust control. Ash and ash-impacted material began being placed on the east side of the closure area.
5:45 - SCS staff left the site.

Material(s) Delivered to Site

NA

Construction Observer

Chris Calhoun

SCS ENGINEERS

DAILY FIELD ACTIVITIES REPORT

Client Name:	Ames Municipal Electric System	**Date:**	April 17, 2025
SCS Engineers Project Name:	Ames Ash Pond Closure	**Start Time:**	8:15 AM
SCS Engineers Project No:	27219356.02	**Stop Time:**	7:15 PM
Project Location:	Ames Municipal Electric System Ash Ponds Ames, Iowa		

Task: *Cleaned Excavation Clearing, Ash Excavation, Ash Placement*

Weather Information

74°, Cloudy, Winds from SE at 20 mph

Contractors, Personnel, and Equipment On Site

Contractors: JB Holland Personnel: 5
Equipment: 1-Hitachi Xaxis 350 LC Excavator, 1-CAT D6N LGP Dozer, 1-CAT D6K2 LGP Dozer, 1-CAT D6 XE Dozer, Bobcat T770 Compact Track Loader, Bobcat E55 Compact Excavator, 2-CAT Dump Trucks, 1-CAT CP56B Compactor, 1-Challenger MT765D Crawler Tractor, 1-Pull-behind sheepsfoot compactor, 1 -John Deere 755D Crawler Loader, 1-ROME TAW-20S Wheel Offset Disc Harrow, 1-John Deere 310 Disk, 1-ROME Disc, 1-Stoltz Truck-Mounted Site Spreader, 1-Fuel Truck, 1-Holmes Rollerblade 11M

Work Areas/Boundaries

Existing Ash Pond

Testing Equipment Used/Observed and Calibration/Re-Calibration Documentation

NA

Tests Completed/Observed

NA

Work Comments/Observations and Test Results

9:00 - The contractor continued cleaning ash and ash-impacted clay from the pond floor and east sideslope. SCS staff visually inspected areas as they were cleared to assess whether they could be considered clean. Areas that required additional cleaning were marked with red utility flags. The contractor used a skidloader to conduct fine-tune cleaning of the pond floor and sideslopes. This activity continued for the majority of the day.
1:45 - The contractor began cleaning the north sideslope of the pond.
4:00 - The contractor used the Holmes Rollerblade to smooth and seal the ash in the closure area to prepare for potential rain.
4:20 - SCS collected soil samples from the pond area. Samples were taken from two different locations on the pond floor at three different depths (6-12", 12-18", & 18-24"). Samples were also taken from two locations on the pond sideslopes at a depth of 6-12".
6:00 - The contractor completed bulk excavation of ash from the pond floor and sideslopes.
7:15 - SCS and the contractor left the site for the day.

Material(s) Delivered to Site

NA

Construction Observer

Chris Calhoun

SCS ENGINEERS

DAILY FIELD ACTIVITIES REPORT

Client Name:	Ames Municipal Electric System	**Date:**	April 18, 2025
SCS Engineers Project Name:	Ames Ash Pond Closure	**Start Time:**	9:30 AM
SCS Engineers Project No:	27219356.02	**Stop Time:**	1:30 PM
Project Location:	Ames Municipal Electric System Ash Ponds Ames, Iowa		

Task: *Cleaned Excavation Clearing, Closure Area Grading*

Weather Information

50°, Cloudy, Winds from NW at 15 mph

Contractors, Personnel, and Equipment On Site

Contractors: JB Holland Personnel: 3
Equipment: 1-Hitachi Xaxis 350 LC Excavator, 1-CAT D6N LGP Dozer, 1-CAT D6K2 LGP Dozer, 1-CAT D6 XE Dozer, Bobcat T770 Compact Track Loader, Bobcat E55 Compact Excavator, 2-CAT Dump Trucks, 1-CAT CP56B Compactor, 1-Challenger MT765D Crawler Tractor, 1-Pull-behind sheepsfoot compactor, 1-John Deere 755D Crawler Loader, 1-ROME TAW-20S Wheel Offset Disc Harrow, 1-John Deere 310 Disk, 1-ROME Disc, 1-Stoltz Truck-Mounted Site Spreader, 1-Fuel Truck, 1-Holmes Rollerblade 11M

Work Areas/Boundaries

Existing Ash Pond

Testing Equipment Used/Observed and Calibration/Re-Calibration Documentation

NA

Tests Completed/Observed

NA

Work Comments/Observations and Test Results

9:30 - The contractor used an excavator and dozer to pull back ash grades and shape the western sideslope of the closure area. After being shaped, the sideslope was rolled with the self-propelled compactor. A portion of the southern sideslope was also shaped throughout the day.
10:00 - SCS staff worked with the contractor to spot clean areas with ash-impacted clay on the pond floor and northern sideslope. Areas that required additional cleaning were marked with red utility flags. The contractor used a skidloader to clean these areas. Excavated material was placed in the closure area.
1:30 - The contractor and SCS staff left the site.

Material(s) Delivered to Site

NA

Construction Observer

Chris Calhoun

SCS ENGINEERS

DAILY FIELD ACTIVITIES REPORT

Client Name:	Ames Municipal Electric System	**Date:**	April 21, 2025
SCS Engineers Project Name:	Ames Ash Pond Closure	**Start Time:**	8:45 AM
SCS Engineers Project No:	27219356.02	**Stop Time:**	2:15 PM
Project Location:	Ames Municipal Electric System Ash Ponds Ames, Iowa		

Task: *Closure Area Grading*

Weather Information

60°, Mostly Cloudy, Winds from NW at 12 mph

Contractors, Personnel, and Equipment On Site

Contractors: JB Holland Personnel: 1
Equipment: 1-Hitachi Xaxis 350 LC Excavator, 1-CAT D6N LGP Dozer, 1-CAT D6K2 LGP Dozer, 1-CAT D6 XE Dozer, Bobcat T770 Compact Track Loader, Bobcat E55 Compact Excavator, 2-CAT Dump Trucks, 1-CAT CP56B Compactor, 1-Challenger MT765D Crawler Tractor, 1-Pull-behind sheepsfoot compactor, 1-John Deere 755D Crawler Loader, 1-ROME TAW-20S Wheel Offset Disc Harrow, 1-John Deere 310 Disk, 1-ROME Disc, 1-Stoltz Truck-Mounted Site Spreader, 1-Fuel Truck, 1-Holmes Rollerblade 11M

Work Areas/Boundaries

Existing Ash Pond

Testing Equipment Used/Observed and Calibration/Re-Calibration Documentation

NA

Tests Completed/Observed

NA

Work Comments/Observations and Test Results

8:45 - The contractor used an excavator and dozer to pull back ash grades and shape the southern sideslope of the closure area. The excavated ash material was piled towards the top of the south slope of the closure area.
12:15 - The contractor shaped and sealed the pile of excavated ash material to prepare for potential rain.
2:15 - SCS staff left the site.

Material(s) Delivered to Site

NA

Construction Observer

Chris Calhoun

SCS ENGINEERS

DAILY FIELD ACTIVITIES REPORT

Client Name:	Ames Municipal Electric System	**Date:**	April 22, 2025
SCS Engineers Project Name:	Ames Ash Pond Closure	**Start Time:**	8:30 AM
SCS Engineers Project No:	27219356.02	**Stop Time:**	6:15 PM
Project Location:	Ames Municipal Electric System Ash Ponds Ames, Iowa		

Task: *Ash Excavation*

Weather Information

58°, Cloudy, Winds from NW at 15 mph

Contractors, Personnel, and Equipment On Site

Contractors: JB Holland Personnel: 3
Equipment: 1-Hitachi Xaxis 350 LC Excavator, 1-CAT D6N LGP Dozer, 1-CAT D6K2 LGP Dozer, 1-CAT D6 XE Dozer, Bobcat T770 Compact Track Loader, Bobcat E55 Compact Excavator, 2-CAT Dump Trucks, 1-CAT CP56B Compactor, 1-Challenger MT765D Crawler Tractor, 1-Pull-behind sheepsfoot compactor, 1-John Deere 755D Crawler Loader, 1-ROME TAW-20S Wheel Offset Disc Harrow, 1-John Deere 310 Disk, 1-ROME Disc, 1-Stoltz Truck-Mounted Site Spreader, 1-Fuel Truck, 1-Holmes Rollerblade 11M

Work Areas/Boundaries

Existing Ash Pond

Testing Equipment Used/Observed and Calibration/Re-Calibration Documentation

NA

Tests Completed/Observed

NA

Work Comments/Observations and Test Results

8:30 - The contractor dewatered the perimeter ditch on the south side of the closure area. Water was pumped to the east clearwater pond.
9:00 - The dozer operator scraped the upper layer of saturated ash material from a section on the east side of the closure area.
10:30 - The contractor began excavating ash material from beneath the access road and above the existing clay liner on the south side of the closure area. Excavated material was placed on the cleared-off section on the east side of the closure area. The dozer operator helped clear the ash from underneath the roadway and along the existing liner sideslope. This activity continued for the remainder of the day. While clearing the south liner sideslope, the pvc pipe that had been discovered further to the east was found again, trenched into the existing clay liner. The portion of pipe that was exposed was located near the top of the south liner sideslope. This pvc pipe is assumed to be the housing for the conduit that ran to the previously removed electrical transformer.
6:00 - The contractor reached the southwest corner of the existing clay liner.
6:15 - SCS staff left the site.

Material(s) Delivered to Site

NA

Construction Observer

Chris Calhoun

SCS ENGINEERS

DAILY FIELD ACTIVITIES REPORT

Client Name:	Ames Municipal Electric System	**Date:**	April 23, 2025
SCS Engineers Project Name:	Ames Ash Pond Closure	**Start Time:**	6:30 AM
SCS Engineers Project No:	27219356.02	**Stop Time:**	6:30 PM
Project Location:	Ames Municipal Electric System Ash Ponds Ames, Iowa		

Task: *Ash Excavation*

Weather Information

76°, Mostly Cloudy, Light rain early morning and evening, Winds varying 5-15 mph

Contractors, Personnel, and Equipment On Site

Contractors: JB Holland Personnel: 3
Equipment: 1-Hitachi Xaxis 350 LC Excavator, 1-CAT D6N LGP Dozer, 1-CAT D6K2 LGP Dozer, 1-CAT D6 XE Dozer, Bobcat T770 Compact Track Loader, Bobcat E55 Compact Excavator, 1-CAT Dump Truck, 1-CAT CP56B Compactor, 1-Challenger MT765D Crawler Tractor, 1-CAT CS563E Smooth Drum Roller, 1-Pull-behind sheepsfoot compactor, 1-John Deere 755D Crawler Loader, 1-ROME TAW-20S Wheel Offset Disc Harrow, 1-John Deere 310 Disk, 1-ROME Disc, 1-Fuel Truck

Work Areas/Boundaries

Existing Ash Pond

Testing Equipment Used/Observed and Calibration/Re-Calibration Documentation

NA

Tests Completed/Observed

NA

Work Comments/Observations and Test Results

6:30 - SCS staff and the contractor met on-site to discuss the west liner sideslope appearing to be further west than anticipated and to assess whether there was ash material present underneath the west access road. It was determined that there was ash underneath the access road and that the road would need to be taken out to remove the ash.
7:30 - The contractor began excavating ash material from beneath the access road and above the existing clay liner on the west side of the closure area. Excavated material was piled on the western edge of the closure area. The dozer operator helped clear the ash from underneath the roadway and along the existing liner sideslope. Periodically, the contractor used the excavator and dozers to move the excavated material from the perimeter of the closure area to the top of the closure area. This activity continued for the remainder of the day. While clearing the southwest corner of the liner sideslope, two pipes were found extending through the liner from the south. One was the approximately 9" dia. cooling tower blow down pipe indicated for removal on the construction drawings. The other was an approximately 15" dia. pipe that appeared to outlet into the ash pond at some point in time but is not shown on the construction drawings. Removal of the 9" pipe continued as excavation progressed along the west side of the closure area. The removed pipe sections were separated from the excavated material and set aside for disposal.
6:30 - SCS staff left the site.

Material(s) Delivered to Site

NA

Construction Observer

Chris Calhoun

SCS ENGINEERS

DAILY FIELD ACTIVITIES REPORT

Client Name:	Ames Municipal Electric System	**Date:**	April 24, 2025
SCS Engineers Project Name:	Ames Ash Pond Closure	**Start Time:**	9:30 AM
SCS Engineers Project No:	27219356.02	**Stop Time:**	6:00 PM
Project Location:	Ames Municipal Electric System Ash Ponds Ames, Iowa		

Task: *Ash Excavation, Closure Area Grading*

Weather Information

70°, Cloudy, Winds from E at 10 mph

Contractors, Personnel, and Equipment On Site

Contractors: JB Holland Personnel: 3
Equipment: 1-Hitachi Xaxis 350 LC Excavator, 1-CAT D6N LGP Dozer, 1-CAT D6K2 LGP Dozer, 1-CAT D6 XE Dozer, Bobcat T770 Compact Track Loader, Bobcat E55 Compact Excavator, 1-CAT Dump Truck, 1-CAT CP56B Compactor, 1-Challenger MT765D Crawler Tractor, 1-CAT CS563E Smooth Drum Roller, 1-Pull-behind sheepsfoot compactor, 1-John Deere 755D Crawler Loader, 1-ROME TAW-20S Wheel Offset Disc Harrow, 1-John Deere 310 Disk, 1-ROME Disc, 1-Fuel Truck

Work Areas/Boundaries

Existing Ash Pond

Testing Equipment Used/Observed and Calibration/Re-Calibration Documentation

NA

Tests Completed/Observed

NA

Work Comments/Observations and Test Results

9:30 - The contractor continued excavating ash material from beneath the access road and above the existing clay liner on the west side of the closure area. Excavated material was piled on the western edge of the closure area. The dozer operator helped clear the ash from underneath the roadway and along the existing liner sideslope. Periodically, the contractor would use the excavator and dozers to move the excavated material from the perimeter of the closure area to the top of the closure area. This activity continued for a majority of the day.
10:45 - SCS staff collected a sample of ash material for arsenic testing.
3:00 - SCS staff staked the proposed revised locations for the contact water vault, wingwall, and area intake near the southeast corner of the closure area. [REVIEW NOTE: The staked items were later redesigned to be located further north]
3:30 - The contractor worked on shaping the closure area.
6:00 - SCS staff left the site.

Material(s) Delivered to Site

NA

Construction Observer

Chris Calhoun

SCS ENGINEERS

DAILY FIELD ACTIVITIES REPORT

Client Name:	Ames Municipal Electric System	**Date:**	April 28, 2025
SCS Engineers Project Name:	Ames Ash Pond Closure	**Start Time:**	9:00 AM
SCS Engineers Project No:	27219356.02	**Stop Time:**	6:15 PM
Project Location:	Ames Municipal Electric System Ash Ponds Ames, Iowa		

Task: *Ash Excavation, Cleaned Excavation Clearing*

Weather Information

78°, Cloudy, Winds from S at 20-30 mph

Contractors, Personnel, and Equipment On Site

Contractors: JB Holland Personnel: 6
Equipment: 1-Hitachi Xaxis 350 LC Excavator, 1-John Deere 135 Mid-Size Excavator, 1-CAT D6N LGP Dozer, 1-CAT D6K2 LGP Dozer, 1-CAT D6 XE Dozer, Bobcat T770 Compact Track Loader, Bobcat E55 Compact Excavator, 1-CAT Dump Truck, 1-CAT CP56B Compactor, 1-Challenger MT765D Crawler Tractor, 1-CAT CS563E Smooth Drum Roller, 1-Pull-behind sheepsfoot compactor, 1-John Deere 755D Crawler Loader, 1-ROME TAW-20S Wheel Offset Disc Harrow, 1-John Deere 310 Disk, 1-ROME Disc, 1-Fuel Truck

Work Areas/Boundaries

Existing Ash Pond

Testing Equipment Used/Observed and Calibration/Re-Calibration Documentation

NA

Tests Completed/Observed

NA

Work Comments/Observations and Test Results

9:00 - 12 rolls of geomembrane were delivered to the site.
9:00 - The contractor began excavating ash material from beneath the proposed perimeter ditch on the north side the closure area. Excavated material was piled on the northern edge of the closure area. This activity continued for a majority of the day.
9:30 - The contractor performed a final clean of the west liner sideslope. SCS staff inspected sections of the sideslope as they were cleared to assess whether they could be considered "clean". Once the entirety of the west sideslope was determined to be "clean", SCS staff surveyed the final excavation grades. This activity continued for a majority of the day.
3:00 - The contractor hauled removed sections of cooling tower blow down pipe to the laydown area for disposal.
3:30 - The contractor worked on shaping the closure area.
4:00 - The contractor used an excavator to pull back grades on the east side of the closure area.
5:45 - The contracor worked to create a bench in the west liner sideslope for haul trucks to utilize for general fill placement in the coming days.
6:15 - SCS staff left the site.

Material(s) Delivered to Site

12 rolls of geomembrane

Construction Observer

Chris Calhoun

SCS ENGINEERS

DAILY FIELD ACTIVITIES REPORT

Client Name:	Ames Municipal Electric System	**Date:**	April 29, 2025
SCS Engineers Project Name:	Ames Ash Pond Closure	**Start Time:**	8:00 AM
SCS Engineers Project No:	27219356.02	**Stop Time:**	7:15 PM
Project Location:	Ames Municipal Electric System Ash Ponds Ames, Iowa		

Task: *General Fill Placement, Ash Excavation*

Weather Information

64°, Sunny, Winds from NW at 14 mph

Contractors, Personnel, and Equipment On Site

Contractors: JB Holland Personnel: 6
Equipment: 1-Hitachi Xaxis 350 LC Excavator, 1-John Deere 135 Mid-Size Excavator, 1-CAT D6N LGP Dozer, 1-CAT D6K2 LGP Dozer, 1-CAT D6 XE Dozer, Bobcat T770 Compact Track Loader, Bobcat E55 Compact Excavator, 1-CAT Dump Truck, 1-CAT CP56B Compactor, 1-Challenger MT765D Crawler Tractor, 1-CAT CS563E Smooth Drum Roller, 1-Pull-behind sheepsfoot compactor, 1-John Deere 755D Crawler Loader, 1-ROME TAW-20S Wheel Offset Disc Harrow, 1-John Deere 310 Disk, 1-ROME Disc, 1-Fuel Truck

Work Areas/Boundaries

Existing Ash Pond

Testing Equipment Used/Observed and Calibration/Re-Calibration Documentation

NA

Tests Completed/Observed

NA

Work Comments/Observations and Test Results

8:00 - The contractor excavated ash material along the south liner sideslope. Excavated material was piled on the southern edge of the closure area. The three temporary pipes placed beneath the south access road were removed in preparation of general fill placement.
8:30 - The contractor dewatered the ditch on the east side of the closure area.
8:45 - General fill started getting delivered to the site with sidedumps. The trucks dumped general fill on the edge of the haul road that had been benched out in the west liner sideslope.
9:00 - The contractor dewatered the area between the west liner sideslope and western limits of ash.
9:30 - The contractor began placing a lift of general fill along the toe of the west liner sideslope.
1:00 - The contractor began excavating ash around the 18" contact water riser pipe and contact water cleanouts near the southeast corner of the closure area.
3:15 - The contractor compacted the first lift of general fill along the west liner sideslope with the self propelled compactor.
3:45 - The contractor began placing another lift of general fill along the west liner sideslope.
5:10 - The contractor compacted the second lift of general fill along the west liner sideslope with the self propelled compactor.
5:30 - The contractor performed a proof roll of the initital lifts of general fill. A majority of the length of the lifts passed the proof roll. A section towards the north end had rutting of several inches and failed the proof roll.
5:45 - The contractor removed the failing portions of general fill.
6:15 - The contractor placed and compacted two new lifts of general fill in the failing area.
6:50 - The contractor performed another proof roll of the general fill. The proof roll passed.
7:15 - SCS staff left the site.

Material(s) Delivered to Site

2 rolls of geomembrane

Construction Observer

Chris Calhoun

SCS ENGINEERS

DAILY FIELD ACTIVITIES REPORT

Client Name:	Ames Municipal Electric System	**Date:**	April 30, 2025
SCS Engineers Project Name:	Ames Ash Pond Closure	**Start Time:**	8:00 AM
SCS Engineers Project No:	27219356.02	**Stop Time:**	7:00 PM
Project Location:	Ames Municipal Electric System Ash Ponds Ames, Iowa		

Task: *General Fill Placement, Cleaned Excavation Clearing, Ash Excavation*

Weather Information

66°, Partly Cloudy, Winds from SE at 16 mph

Contractors, Personnel, and Equipment On Site

Contractors: JB Holland Personnel: 6
Equipment: 1-Hitachi Xaxis 350 LC Excavator, 1-John Deere 135 Mid-Size Excavator, 1-CAT D6N LGP Dozer, 1-CAT D6 XE Dozer, Bobcat T770 Compact Track Loader, Bobcat E55 Compact Excavator, 1-Volvo Dump Truck, 1-CAT CP56B Compactor, 1-Challenger MT765D Crawler Tractor, 1-CAT CS563E Smooth Drum Roller, 1-Pull-behind sheepsfoot compactor, 1-John Deere 755D Crawler Loader, 1-ROME TAW-20S Wheel Offset Disc Harrow, 1-John Deere 310 Disk, 1-ROME Disc, 1-Fuel Truck

Work Areas/Boundaries

Existing Ash Pond

Testing Equipment Used/Observed and Calibration/Re-Calibration Documentation

NA

Tests Completed/Observed

NA

Work Comments/Observations and Test Results

8:00 - General fill was delivered to the site and dumped along the west liner sideslope. The contractor continued placing lifts of general fill in approximately 1-foot lifts along the west liner sideslope. Each lift was compacted with the self-propelled compactor. A proof roll was performed in two-lift increments. This activity continued for the entirety of the day.
8:30 - The contractor used a dozer to clean the clay liner on the north side of the closure area.
10:00 - SCS staff assessed a section of the clay liner on the north side of the closure area to be considered "clean". SCS staff surveyed the excavated area that was considered "clean".
10:30 - The contractor performed a final clean on a section of the south liner sideslope. SCS staff assessed the excavated portion of sideslope and determined it to be "clean". The excavated sideslope area was surveyed.
1:15 - The contractor continued excavating ash material along the south liner sideslope.
1:30 - The contractor began placing a lift of general fill in the "clean" excavated area on the north side of the closure area. Three lifts of fill were placed and compacted in this area throughout the day. A proof roll was performed after the second lift was compacted. The proof roll passed.
3:00 - The contractor used a mini excavator and hand shovels to clean the ash around the 18" riser pipe and cleanouts near the southeast corner of the closure area.
3:45 - The contractor built a stand to support the 18" riser pipe as they continued to clean around it.
5:30 - The contractor began placing a lift of general fill along the cleaned section of south liner sideslope. The lift was compacted towards the end of the day.
7:00 - SCS staff left the site.

Material(s) Delivered to Site

NA

Construction Observer

Chris Calhoun

SCS ENGINEERS

DAILY FIELD ACTIVITIES REPORT

Client Name:	Ames Municipal Electric System	**Date:**	May 1, 2025
SCS Engineers Project Name:	Ames Ash Pond Closure	**Start Time:**	8:45 AM
SCS Engineers Project No:	27219356.02	**Stop Time:**	6:00 PM
Project Location:	Ames Municipal Electric System Ash Ponds Ames, Iowa		

Task: *Cleaned Excavation Clearing, Ash Excavation*

Weather Information

66°, Cloudy, Rain in the afternoon, Winds from NW at 10-15 mph

Contractors, Personnel, and Equipment On Site

Contractors: JB Holland Personnel: 6 in the morning, 3 in the afternoon/evening
Equipment: 1-Hitachi Xaxis 350 LC Excavator, 1-John Deere 135 Mid-Size Excavator, 1-CAT D6N LGP Dozer, 1-CAT D6 XE Dozer, Bobcat T770 Compact Track Loader, Bobcat E55 Compact Excavator, 1-Volvo Dump Truck, 1-CAT CP56B Compactor, 1-Challenger MT765D Crawler Tractor, 1-CAT CS563E Smooth Drum Roller, 1-Pull-behind sheepsfoot compactor, 1-John Deere 755D Crawler Loader, 1-ROME TAW-20S Wheel Offset Disc Harrow, 1-John Deere 310 Disk, 1-ROME Disc, 1-Fuel Truck

Work Areas/Boundaries

Existing Ash Pond

Testing Equipment Used/Observed and Calibration/Re-Calibration Documentation

NA

Tests Completed/Observed

NA

Work Comments/Observations and Test Results

8:45 - The contractor continued excavating ash from the south liner sideslope to accomodate the revised perimeter ditch alignment.
12:30 - The contractor performed a final clean on a section of the south liner sideslope. SCS staff assessed the excavated portion of sideslope and determined it to be "clean". The excavated sideslope area was surveyed.
2:30 - The contractor performed a final clean on a section of the clay liner on the north side of the closure area. SCS staff assessed the excavated portion of liner and determined it to be "clean". The excavated area was surveyed.
3:00 - The contractor used a mini excavator to clean the ash around the 18" riser pipe and cleanouts near the southeast corner of the closure area. The contractor continued excavating ash from the southeast corner of the closure area for the remainder of the day.
6:00 - SCS staff left the site.

Material(s) Delivered to Site

NA

Construction Observer

Chris Calhoun

SCS ENGINEERS

DAILY FIELD ACTIVITIES REPORT

Client Name:	Ames Municipal Electric System	**Date:**	May 2, 2025
SCS Engineers Project Name:	Ames Ash Pond Closure	**Start Time:**	8:15 AM
SCS Engineers Project No:	27219356.02	**Stop Time:**	2:30 PM
Project Location:	Ames Municipal Electric System Ash Ponds Ames, Iowa		

Task: *General Fill Placement, Cleaned Excavation Clearing, Ash Excavation*

Weather Information

57°, Partly Cloudy, Winds from NW at 9 mph

Contractors, Personnel, and Equipment On Site

Contractors: JB Holland Personnel: 6
Equipment: 1-Hitachi Xaxis 350 LC Excavator, 1-John Deere 135 Mid-Size Excavator, 1-CAT D6N LGP Dozer, 1-CAT D6 XE Dozer, Bobcat T770 Compact Track Loader, Bobcat E55 Compact Excavator, 1-Volvo Dump Truck, 1-CAT CP56B Compactor, 1-Challenger MT765D Crawler Tractor, 1-CAT CS563E Smooth Drum Roller, 1-Pull-behind sheepsfoot compactor, 1-John Deere 755D Crawler Loader, 1-ROME TAW-20S Wheel Offset Disc Harrow, 1-John Deere 310 Disk, 1-ROME Disc, 1-Fuel Truck

Work Areas/Boundaries

Existing Ash Pond

Testing Equipment Used/Observed and Calibration/Re-Calibration Documentation

NA

Tests Completed/Observed

NA

Work Comments/Observations and Test Results

8:15 - General fill was delivered to the site and dumped near the southwest corner of the closure area.
8:30 - The contractor continued excavating ash near the southeast corner of the closure area.
8:45 - The contractor continued placing a lift of general fill along the south liner sideslope.
10:30 - SCS staff assessed the excavated portion of liner near the southeast corner of the closure area to be considered as "clean". The area was determined to be "clean" and was subsequently surveyed.
11:30 - The contractor compacted the general fill placed along the south liner sideslope with the self-propelled compactor.
12:00 - The contractor placed a lift of general fill along the north and west sides of the closure area. The lift was compacted with the self-propelled compactor.
12:50 - The contractor performed a proof roll of the general fill on the west side of the closure area. The proof roll passed.
1:00 - The contractor used an excavator to place general fill around the 18" riser pipe and cleanouts near the southeast corner of the closure area.
1:30 - The contractor used a plate compactor attached to a mini excavator to compact the general fill around the 18" riser pipe and cleanouts.
1:45 - The contractor compacted the general fill placed along the south and west sides of the closure area with the self-propelled compactor.
2:30 - SCS staff left the site.

Material(s) Delivered to Site

NA

Construction Observer

Chris Calhoun

SCS ENGINEERS

DAILY FIELD ACTIVITIES REPORT

Client Name:	Ames Municipal Electric System	**Date:**	May 5, 2025
SCS Engineers Project Name:	Ames Ash Pond Closure	**Start Time:**	8:45 AM
SCS Engineers Project No:	27219356.02	**Stop Time:**	7:15 PM
Project Location:	Ames Municipal Electric System Ash Ponds Ames, Iowa		

Task: *General Fill Placement*

Weather Information

72°, Sunny, Winds from NE at 12 mph

Contractors, Personnel, and Equipment On Site

Contractors: JB Holland Personnel: 3
Equipment: 1-Hitachi Xaxis 350 LC Excavator, 1-John Deere 135 Mid-Size Excavator, 1-CAT D6N LGP Dozer, 1-CAT D6 XE Dozer, Bobcat T770 Compact Track Loader, Bobcat E55 Compact Excavator, 1-Volvo Dump Truck, 1-CAT CP56B Compactor, 1-Challenger MT765D Crawler Tractor, 1-CAT CS563E Smooth Drum Roller, 1-Pull-behind sheepsfoot compactor, 1-John Deere 755D Crawler Loader, 1-ROME TAW-20S Wheel Offset Disc Harrow, 1-John Deere 310 Disk, 1-ROME Disc, 1-Fuel Truck

Work Areas/Boundaries

Existing Ash Pond

Testing Equipment Used/Observed and Calibration/Re-Calibration Documentation

NA

Tests Completed/Observed

NA

Work Comments/Observations and Test Results

9:00 - General fill was delivered to the site for placement around the perimeter of the closure area. General fill was placed and compacted in approximately 1-foot lifts on the north, west, and south sides of the closure area. This activity continued through most of the day.
11:00 - SCS staff began surveying the ash excavation limits in the east pond area.
11:45 - The contractor performed a proof roll of the general fill on the north and west sides of the closure area. The proof roll passed.
12:00 - The contractor disked the ash in the closure area. This activity was conducted several times throughout the day.
12:15 - SCS staff continued surveying the ash excavation limits in the east pond area.
2:30 - The contractor performed a proof roll of the general fill on the south side of the closure area. The eastern portion of the general fill passed the proof roll while a section on the west side failed. The failing section was pushed off to the side with a dozer to dry out.
6:00 - The contractor performed a proof roll of the general fill on the west side of the closure area. The proof roll passed.
6:05 - The contractor disked sections of general fill on the west and south sides of the closure area.
6:20 - SCS staff surveyed the extents of general fill placement around the perimeter of the closure area.
7:15 - SCS staff left the site.

Material(s) Delivered to Site

NA

Construction Observer

Chris Calhoun

SCS ENGINEERS

DAILY FIELD ACTIVITIES REPORT

Client Name:	Ames Municipal Electric System	**Date:**	May 6, 2025
SCS Engineers Project Name:	Ames Ash Pond Closure	**Start Time:**	8:15 AM
SCS Engineers Project No:	27219356.02	**Stop Time:**	6:30 PM
Project Location:	Ames Municipal Electric System Ash Ponds Ames, Iowa		

Task: *General Fill Placement*

Weather Information

74°, Sunny, Winds varying from 5-10 mph

Contractors, Personnel, and Equipment On Site

Contractors: JB Holland Personnel: 4
Equipment: 1-John Deere 380G Excavator, 1-John Deere 135 Mid-Size Excavator, 1-CAT D6N LGP Dozer, 1-CAT D6 XE Dozer, Bobcat T770 Compact Track Loader, 1-Volvo Dump Truck, 1-CAT CP56B Compactor, 1-CAT CS563E Smooth Drum Roller, 1-Pull-behind sheepsfoot compactor, 1-John Deere 755D Crawler Loader, 1-John Deere 310 Disk, 1-ROME Disc, 1-Fuel Truck

Work Areas/Boundaries

Existing Ash Pond

Testing Equipment Used/Observed and Calibration/Re-Calibration Documentation

NA

Tests Completed/Observed

NA

Work Comments/Observations and Test Results

8:15 - General fill was excavated from the on-site west soil stockpile. General fill was placed and compacted in approximately 1-foot lifts along the west and south sides of the closure area. This activity continued through most of the day.
8:30 - The contractor performed a proof roll of the general fill on the south side of the closure area. The proof roll passed.
10:30 - The contractor performed a proof roll of the general fill on the west side of the closure area. The proof roll passed.
11:15 - SCS staff continued surveying the ash excavation limits in the east pond area.
1:00 - The contractor performed a proof roll of the general fill on the south side of the closure area. The proof roll passed.
3:00 - SCS staff completed surveying the ash excavation limits in the east pond area.
5:00 - The contractor began placing general fill near the southeast corner of the closure area to the east of the 18" riser pipe and cleanouts. The general fill placed in this area was compacted with a plate compactor attached to an excavator.
6:30 - SCS staff left the site.

Material(s) Delivered to Site

NA

Construction Observer

Chris Calhoun

SCS ENGINEERS

DAILY FIELD ACTIVITIES REPORT

Client Name:	Ames Municipal Electric System	**Date:**	May 7, 2025
SCS Engineers Project Name:	Ames Ash Pond Closure	**Start Time:**	8:15 AM
SCS Engineers Project No:	27219356.02	**Stop Time:**	6:30 PM
Project Location:	Ames Municipal Electric System Ash Ponds Ames, Iowa		

Task: *General Fill Placement, Closure Area Grading*

Weather Information

80°, Partly cloudy, Light rain in the early evening, Winds from ESE at 10 mph

Contractors, Personnel, and Equipment On Site

Contractors: JB Holland Personnel: 4 in the morning, 2 in the afternoon/evening
Equipment: 1-John Deere 380G Excavator, 1-John Deere 135 Mid-Size Excavator, 1-CAT D6 XE Dozer, Bobcat T770 Compact Track Loader, 1-Volvo Dump Truck, 1-CAT CP56B Compactor, 1-CAT CS563E Smooth Drum Roller, 1-Pull-behind sheepsfoot compactor, 1-John Deere 755D Crawler Loader, 1-John Deere 310 Disk, 1-ROME Disc, 1-Fuel Truck

Work Areas/Boundaries

Existing Ash Pond

Testing Equipment Used/Observed and Calibration/Re-Calibration Documentation

NA

Tests Completed/Observed

NA

Work Comments/Observations and Test Results

8:15 - General fill was excavated from the on-site west soil stockpile. General fill was placed and compacted in approximately 1-foot lifts along the west side and in the southeast corner of the closure area. This activity continued until approximately 11:00am.
10:00 - The contractor performed a proof roll of the general fill on the west side of the closure area. The proof roll passed.
11:00 - The contractor used an excavator to shape the bottom of the closure area slope.
12:30 - The contractor used a plate compactor attached to an excavator to compact general fill around the 18" riser pipe and cleanouts near the southeast corner of the closure area.
2:00 - The contractor used a dozer to push ash material down the east closure area slope to fill in the toe of the slope adjacent to the separation berm. The contractor placed and compacted the ash in lifts along the toe of the slope. This activity continued for the remainder of the day.
6:30 - SCS staff left the site.

Material(s) Delivered to Site

NA

Construction Observer

Chris Calhoun

SCS ENGINEERS

DAILY FIELD ACTIVITIES REPORT

Client Name:	Ames Municipal Electric System	**Date:**	May 8, 2025
SCS Engineers Project Name:	Ames Ash Pond Closure	**Start Time:**	8:45 AM
SCS Engineers Project No:	27219356.02	**Stop Time:**	6:45 PM
Project Location:	Ames Municipal Electric System Ash Ponds Ames, Iowa		

Task: *Contact Water Collection Riser and Cleanouts, Closure Area Grading*

Weather Information

72°, Sunny, Winds from NE at 12 mph

Contractors, Personnel, and Equipment On Site

Contractors: JB Holland Personnel: 2
Equipment: 1-John Deere 380G Excavator, 1-John Deere 135 Mid-Size Excavator, 1-CAT D6 XE Dozer, Bobcat T770 Compact Track Loader, 1-CAT CP56B Compactor, 1-CAT CS563E Smooth Drum Roller, 1-John Deere 755D Crawler Loader, 1-John Deere 310 Disk, 1-ROME Disc, 1-Fuel Truck

Work Areas/Boundaries

Existing Ash Pond

Testing Equipment Used/Observed and Calibration/Re-Calibration Documentation

Nuclear Density Gauge - Standard Calibration

Tests Completed/Observed

Two compaction tests performed with the nuclear density gauge.

Work Comments/Observations and Test Results

8:45 - The contractor worked to establish the alignment and profile of the 18" riser pipe and cleanouts located near the southeast corner of the closure area.
11:00 - The contractor placed and compacted fill around the 18" riser pipe and cleanouts.
2:00 - The contractor used a dozer to work on the final grading of the ash in the closure area.
5:30 - The contractor used a smooth drum roller to compact the north slope of the closure area.
5:45 - SCS staff performed the daily standard calibration for the nuclear density gauge.
6:15 - SCS staff performed two compaction tests on the general fill placed beneath the to-be-replaced west access road with the nuclear density gauge. One test was conducted on the southern half of the west road alignment, the other was conducted on the northern half. The results were as follows: Test #1 (South) - 97.8% compaction, 11.9% moisture content. Test #2 (North) - 97.4% compaction, 12.2% moisture content. Both tests passed.
6:45 - SCS staff left the site.

Material(s) Delivered to Site

NA

Construction Observer

Chris Calhoun

SCS ENGINEERS

DAILY FIELD ACTIVITIES REPORT

Client Name:	Ames Municipal Electric System	**Date:**	May 9, 2025
SCS Engineers Project Name:	Ames Ash Pond Closure	**Start Time:**	8:45 AM
SCS Engineers Project No:	27219356.02	**Stop Time:**	1:45 PM
Project Location:	Ames Municipal Electric System Ash Ponds Ames, Iowa		

Task: *Closure Area Grading*

Weather Information

68°, Sunny, Winds varying 0-5 mph

Contractors, Personnel, and Equipment On Site

Contractors: JB Holland Personnel: 2
Equipment: 1-John Deere 380G Excavator, 1-John Deere 135 Mid-Size Excavator, 1-CAT D6 XE Dozer, Bobcat T770 Compact Track Loader, 1-CAT CP56B Compactor, 1-CAT CS563E Smooth Drum Roller, 1-John Deere 755D Crawler Loader, 1-John Deere 310 Disk, 1-ROME Disc, 1-Fuel Truck

Work Areas/Boundaries

Existing Ash Pond

Testing Equipment Used/Observed and Calibration/Re-Calibration Documentation

NA

Tests Completed/Observed

NA

Work Comments/Observations and Test Results

8:45: The contractor continued working on the final grading of the ash in the closure area. The contractor also continued to use a smooth drum roller to compact and smooth the closure area slopes.
10:00 - SCS staff, the contractor, and City of Ames staff met on-site to discuss necessary access road widths and other project related items.
11:45 - The contractor used a dozer to excavate several soft spots in the closure area. The dozer operator spread out the excavated material to dry.
1:45 - SCS staff left the site.

Material(s) Delivered to Site

NA

Construction Observer

Chris Calhoun, Matt Kuhlenengel

SCS ENGINEERS

DAILY FIELD ACTIVITIES REPORT

Client Name:	Ames Municipal Electric System	**Date:**	May 12, 2025
SCS Engineers Project Name:	Ames Ash Pond Closure	**Start Time:**	8:45 AM
SCS Engineers Project No:	27219356.02	**Stop Time:**	5:15 PM
Project Location:	Ames Municipal Electric System Ash Ponds Ames, Iowa		

Task: *Proof Roll, Ash Conditioning, Trash Picking*

Weather Information

83°, Sunny, Winds from SE at 14 mph

Contractors, Personnel, and Equipment On Site

Contractors: JB Holland Personnel: 2
Equipment: 1-John Deere 380G Excavator, 1-John Deere 135 Mid-Size Excavator, 1-CAT D6 XE Dozer, Bobcat T770 Compact Track Loader, 1-CAT CP56B Compactor, 1-CAT CS563E Smooth Drum Roller, 1-John Deere 755D Crawler Loader, 1-John Deere 310 Disk, 1-ROME Disc, 1-Fuel Truck, 1-4,000 Gal. Water Truck

Work Areas/Boundaries

Existing Ash Pond

Testing Equipment Used/Observed and Calibration/Re-Calibration Documentation

NA

Tests Completed/Observed

NA

Work Comments/Observations and Test Results

8:45 - The contractor continued working on the final grading of the ash in the closure area. The contractor also continued to use a smooth drum roller to compact and smooth the closure area slopes.
11:00 - The contractor began hand-picking trash and other debris from the cap that could potentially affect the integrity of the geomembrane.
2:00 - The contractor performed a proof roll of the closure area. A majority of the cap passed the proof roll. A few soft spots were present towards the top of the closure slopes that had rutting greather than one inch.
2:45 - The contractor used a dozer to open up the soft spots in the cap to dry out.
3:00 - The contractor continued hand-picking trash and other debris from the cap.
5:15 - SCS staff left the site.

Material(s) Delivered to Site

NA

Construction Observer

Chris Calhoun

SCS ENGINEERS

DAILY FIELD ACTIVITIES REPORT

Client Name:	Ames Municipal Electric System	**Date:**	May 13, 2025
SCS Engineers Project Name:	Ames Ash Pond Closure	**Start Time:**	8:15 AM
SCS Engineers Project No:	27219356.02	**Stop Time:**	5:00 PM
Project Location:	Ames Municipal Electric System Ash Ponds Ames, Iowa		

Task: *Proof Roll, Ash Conditioning, Trash Picking*

Weather Information

82°, Sunny, Winds from SE at 13 mph

Contractors, Personnel, and Equipment On Site

Contractors: JB Holland Personnel: 1
Equipment: 1-John Deere 380G Excavator, 1-John Deere 135 Mid-Size Excavator, 1-CAT D6 XE Dozer, Bobcat T770 Compact Track Loader, 1-CAT CP56B Compactor, 1-CAT CS563E Smooth Drum Roller, 1-John Deere 755D Crawler Loader, 1-Fuel Truck, 1-4,000 Gal. Water Truck, 1-McElroy Tracstar Series 2 Fusion Machine

Work Areas/Boundaries

Existing Ash Pond

Testing Equipment Used/Observed and Calibration/Re-Calibration Documentation

Nuclear Density Gauge - Standard Calibration

Tests Completed/Observed

Two compaction tests performed with the nuclear density gauge.

Work Comments/Observations and Test Results

8:15 - The contractor compacted a portion of the cap on the southeast side of the closure area with the self-propelled compactor. This area had failed a proof roll the day prior.
9:00 - The contractor performed a proof roll on the section of the cap that had been compacted. The proof roll passed.
10:00 - The contractor spent the remainder of the day conditioning the ash in the areas of the cap that failed the proof roll the day prior. This was done by continuing to turn the ash over to dry and rolling with the self-propelled compactor. The contractor also periodically hand-picked trash and debris from the closure cap.
1:30 - SCS staff performed the daily standard count for the nuclear density gauge.
1:45 - SCS staff performed two compaction tests on the general fill placed beneath the to-be-replaced south access road with the nuclear density gauge. One test was conducted on the western half of the south road alignment, the other was conducted on the eastern half. The results were as follows: Test #1 (West) - 100.3% compaction, 9.6% moisture content. Test #2 (East) - 97.8% compaction, 11.1% moisture content. Both tests passed.
5:00 - SCS staff left the site.

Material(s) Delivered to Site

NA

Construction Observer

Chris Calhoun

SCS ENGINEERS

DAILY FIELD ACTIVITIES REPORT

Client Name:	Ames Municipal Electric System	**Date:**	May 14, 2025
SCS Engineers Project Name:	Ames Ash Pond Closure	**Start Time:**	8:45 AM
SCS Engineers Project No:	27219356.02	**Stop Time:**	1:45 PM
Project Location:	Ames Municipal Electric System Ash Ponds Ames, Iowa		

Task: *Proof Roll, Contact Water Collection Cleanouts, Closure Area Grading*

Weather Information

84°, Sunny, Winds from SE at 14 mph

Contractors, Personnel, and Equipment On Site

Contractors: JB Holland Personnel: 1
Equipment: 1-John Deere 380G Excavator, 1-John Deere 135 Mid-Size Excavator, 1-CAT D6 XE Dozer, Bobcat T770 Compact Track Loader, 1-CAT CP56B Compactor, 1-CAT CS563E Smooth Drum Roller, 1-John Deere 755D Crawler Loader, 1-Fuel Truck, 1-4,000 Gal. Water Truck, 1-McElroy Tracstar Series 2 Fusion Machine

Work Areas/Boundaries

Existing Ash Pond

Testing Equipment Used/Observed and Calibration/Re-Calibration Documentation

NA

Tests Completed/Observed

NA

Work Comments/Observations and Test Results

8:45 - The contractor performed a proof roll on portions of the west and south closure slopes that had failed a proof roll two days prior. The proof roll passed.
9:05 - The contractor placed AquaBlok around the contact water collection cleanouts on the north side of the closure area.
10:00 - The contractor worked the ash near the top of the north closure slope to help eliminate moisture.
12:05 - The contractor compacted the ash near the top of the north closure slope with the self-propelled compactor.
12:45 - The contractor performed a proof roll of the northern slope of the closure area. The proof roll passed.
1:15 - The contractor worked on trimming and shaping the closure area to final grades.
1:45 - SCS staff left the site.

Material(s) Delivered to Site

NA

Construction Observer

Chris Calhoun

SCS ENGINEERS

DAILY FIELD ACTIVITIES REPORT

Client Name:	Ames Municipal Electric System	**Date:**	May 16, 2025
SCS Engineers Project Name:	Ames Ash Pond Closure	**Start Time:**	8:15 AM
SCS Engineers Project No:	27219356.02	**Stop Time:**	3:30 PM
Project Location:	Ames Municipal Electric System Ash Ponds Ames, Iowa		

Task: *Subgrade Preparation, Trash Picking*

Weather Information

72°, Partly Cloudy, Winds from W at 33 mph

Contractors, Personnel, and Equipment On Site

Contractors: JB Holland Personnel: 5
Equipment: 1-John Deere 380G Excavator, 1-John Deere 135 Mid-Size Excavator, 1-CAT D6 XE Dozer, Bobcat T770 Compact Track Loader, 1-CAT CP56B Compactor, 1-CAT CS563E Smooth Drum Roller, 1-John Deere 755D Crawler Loader, 1-Fuel Truck, 1-4,000 Gal. Water Truck, 1-McElroy Tracstar Series 2 Fusion Machine

Work Areas/Boundaries

Existing Ash Pond

Testing Equipment Used/Observed and Calibration/Re-Calibration Documentation

NA

Tests Completed/Observed

NA

Work Comments/Observations and Test Results

8:15 - The contractor rolled the slopes of the closure area with the smooth drum roller. This activity continued throughout the morning.
8:30 - The contractor hand-picked trash and debris from the closure cap. This activity continued throughout the morning.
1:00 - SCS staff surveyed the top of ash grades in the closure area.
2:00 - The contractor began prepping the site for forecasted rain. The contractor cut a ditch and bermed general fill along the toe of the west closure slope to drain stormwater to the south and to contain any ash sediment from migrating outside of the project area. The contractor also cut a ditch that discharged directly to the east clearwater pond.
2:30 - The contractor constructed a berm on the western edge of the separation berm to contain ash within the east side of the closure area.
3:00 - The contractor left the site.
3:30 - SCS staff left the site.

Material(s) Delivered to Site

17.6 Tons of Sand

Construction Observer

Chris Calhoun

SCS ENGINEERS

DAILY FIELD ACTIVITIES REPORT

Client Name:	Ames Municipal Electric System	**Date:**	May 19, 2025
SCS Engineers Project Name:	Ames Ash Pond Closure	**Start Time:**	8:00 AM
SCS Engineers Project No:	27219356.02	**Stop Time:**	10:30 PM
Project Location:	Ames Municipal Electric System Ash Ponds Ames, Iowa		

Task: *Sandbags*

Weather Information

52°, Cloudy, Winds from E at 20 mph

Contractors, Personnel, and Equipment On Site

Contractors: JB Holland (JBH), Clean Air and Water (CAAW) Personnel: JBH - 4, CAAW - 13
Equipment: 1-John Deere 380G Excavator, 1-John Deere 135 Mid-Size Excavator, 1-CAT D6 XE Dozer, 2-Bobcat T770 Compact Track Loader, 1-John Deere 333P Compact Track Loader, 1-CAT CP56B Compactor, 1-CAT CS563E Smooth Drum Roller, 1-John Deere 755D Crawler Loader, 1-Fuel Truck, 1-4,000 Gal. Water Truck, 1-McElroy Tracstar Series 2 Fusion Machine

Work Areas/Boundaries

Existing Ash Pond

Testing Equipment Used/Observed and Calibration/Re-Calibration Documentation

NA

Tests Completed/Observed

NA

Work Comments/Observations and Test Results

8:00 - SCS, JB Holland, Clean Air and Water (CAAW), and City of Ames staff met at the power plant to discuss installation of the cap liner system.
9:00 - CAAW filled sandbags at the project site.
10:30 - SCS staff left the site.

Material(s) Delivered to Site

NA

Construction Observer

Chris Calhoun

SCS ENGINEERS

DAILY FIELD ACTIVITIES REPORT

Client Name:	Ames Municipal Electric System	**Date:**	May 21, 2025
SCS Engineers Project Name:	Ames Ash Pond Closure	**Start Time:**	9:40 AM
SCS Engineers Project No:	27219356.02	**Stop Time:**	4:00 PM
Project Location:	Ames Municipal Electric System Ash Ponds Ames, Iowa		

Task: *Closure Area Perimeter Cleanup, Dewatering, Pipe Welding*

Weather Information

58°, Cloudy, Winds from NW at 23 mph

Contractors, Personnel, and Equipment On Site

Contractors: JB Holland (JBH) Personnel: JBH - 4
Equipment: 1-John Deere 380G Excavator, 1-John Deere 135 Mid-Size Excavator, 1-CAT D6 XE Dozer, 2-Bobcat T770 Compact Track Loader, 1-John Deere 333P Compact Track Loader, 1-CAT CP56B Compactor, 1-CAT CS563E Smooth Drum Roller, 1-John Deere 755D Crawler Loader, 1-Fuel Truck, 1-4,000 Gal. Water Truck, 1-McElroy Tracstar Series 2 Fusion Machine

Work Areas/Boundaries

Existing Ash Pond

Testing Equipment Used/Observed and Calibration/Re-Calibration Documentation

NA

Tests Completed/Observed

NA

Work Comments/Observations and Test Results

9:40 - The contractor used an excavator to pull back ash sediment that had washed out to the toe of the closure area slopes during the rain storms the day prior. The contractor used a dozer to spread the wet ash out on the closure area slopes to dry. This activity continued for a majority of the day.
10:00 - The contractor worked on dewatering the north side of the closure area.
12:00 - The contractor fusion welded the blind flange for the contact water riser to a short section of 18" pipe. The contractor also fusion welded fittings for the toe drain system.
4:00 - SCS staff left the site.

Material(s) Delivered to Site

NA

Construction Observer

Chris Calhoun

SCS ENGINEERS

DAILY FIELD ACTIVITIES REPORT

Client Name:	Ames Municipal Electric System	**Date:**	May 22, 2025
SCS Engineers Project Name:	Ames Ash Pond Closure	**Start Time:**	8:30 AM
SCS Engineers Project No:	27219356.02	**Stop Time:**	4:00 PM
Project Location:	Ames Municipal Electric System Ash Ponds Ames, Iowa		

Task: *Closure Area Perimeter Cleanup, Contact Water Collection Vault, Sandbags*

Weather Information

58°, Cloudy with light rain midday, Winds from NW at 18 mph

Contractors, Personnel, and Equipment On Site

Contractors: JB Holland (JBH), Clean Air and Water (CAAW) Personnel: JBH - 4, CAAW - 13
Equipment: 1-John Deere 380G Excavator, 1-John Deere 135 Mid-Size Excavator, 1-CAT D6 XE Dozer, 2-Bobcat T770 Compact Track Loader, 1-John Deere 333P Compact Track Loader, 1-CAT CP56B Compactor, 1-CAT CS563E Smooth Drum Roller, 1-John Deere 755D Crawler Loader, 1-Fuel Truck, 1-4,000 Gal. Water Truck, 1-McElroy Tracstar Series 2 Fusion Machine

Work Areas/Boundaries

Existing Ash Pond

Testing Equipment Used/Observed and Calibration/Re-Calibration Documentation

NA

Tests Completed/Observed

NA

Work Comments/Observations and Test Results

8:30 - The contractor continued placing ash sediment back into the closure area and spreading it out to dry. This activity continued throughout the morning.
9:00 - The liner crew continued filling sandbags and preparing for liner deployment.
9:15 - The contractor began excavation for the placement of the contact water collection vault. Aggregate was placed for the vault bedding.
11:30 - The contractor began placement of the contact water collection vault.
12:30 - SCS staff collected a sample of the cover protective soil from the offsite borrow for lab testing.
1:15 - The contractor worked on the 18" riser pipe connection into the contact water collection vault.
2:45 - The contractor prepared the 18" riser pipe sections for placement of the electrofusion coupling. The electrofusion coupling was subsequently placed on the 18" riser pipe sections.
3:00 - SCS staff inspected the perimeter of the closure area to ensure that ash sediment had been placed back within the closure limits.
4:00 - SCS staff left the site.

Material(s) Delivered to Site

NA

Construction Observer

Chris Calhoun

SCS ENGINEERS

DAILY FIELD ACTIVITIES REPORT

Client Name:	Ames Municipal Electric System	**Date:**	May 23, 2025
SCS Engineers Project Name:	Ames Ash Pond Closure	**Start Time:**	7:45 AM
SCS Engineers Project No:	27219356.02	**Stop Time:**	8:30 PM
Project Location:	Ames Municipal Electric System Ash Ponds Ames, Iowa		

Task: *Subgrade Preparation, Geomembrane Placement, Contact Water Collection Vault*

Weather Information

69°, Partly Cloudy, Winds from W at 6 mph

Contractors, Personnel, and Equipment On Site

Contractors: JB Holland (JBH), Clean Air and Water (CAAW) Personnel: JBH - 4, CAAW - 13
Equipment: 1-John Deere 380G Excavator, 1-John Deere 135 Mid-Size Excavator, 1-CAT D6 XE Dozer, 2-Bobcat T770 Compact Track Loader, 1-John Deere 333P Compact Track Loader, 1-CAT CP56B Compactor, 1-CAT CS563E Smooth Drum Roller, 1-John Deere 755D Crawler Loader, 1-Fuel Truck, 1-4,000 Gal. Water Truck, 1-McElroy Tracstar Series 2 Fusion Machine

Work Areas/Boundaries

Existing Ash Pond

Testing Equipment Used/Observed and Calibration/Re-Calibration Documentation

NA

Tests Completed/Observed

NA

Work Comments/Observations and Test Results

7:45 - The contractor prepared the ash subgrade for geomembrane placement. The closure area was compacted with the smooth drum roller.
8:00 - The contractor began backfilling around the base of the contact water collection vault with general fill. A Jumping Jack style tamper was used to compact the general fill.
10:00 - The contractor extended the cleanout risers located next to the contact water collection vault.
11:00 - SCS staff began surveying the top of ash in the closure area.
11:15 - The contractor began excavating the anchor trench on the north side of the closure area.
11:30 - The contractor compacted the ash around the contact water collection cleanouts.
1:15 - CAAW began placing geomembrane on the north side of the closure area. Geomembrane placement continued for the remainder of the day. Panels 1 through 28 were placed on the north side and northeast corner of the closure area.
3:15 - The contractor used a skidloader to grade the northeast corner of the closure area to promote positive drainage into the anchor trench.
7:15 - The liner crew left the site.
7:45 - SCS staff continued surveying the top of ash in the closure area.
8:30 - SCS staff left the site.

Material(s) Delivered to Site

NA

Construction Observer

Chris Calhoun, Matthew Kuhlenengel

SCS ENGINEERS

DAILY FIELD ACTIVITIES REPORT

Client Name:	Ames Municipal Electric System	**Date:**	May 24, 2025
SCS Engineers Project Name:	Ames Ash Pond Closure	**Start Time:**	6:00 AM
SCS Engineers Project No:	27219356.02	**Stop Time:**	6:15 PM
Project Location:	Ames Municipal Electric System Ash Ponds Ames, Iowa		

Task: *Geomembrane Placement*

Weather Information

68°, Cloudy, Winds from E at 9 mph

Contractors, Personnel, and Equipment On Site

Contractors: JB Holland (JBH), Clean Air and Water (CAAW) Personnel: JBH - 1, CAAW - 13
Equipment: 1-John Deere 380G Excavator, 1-John Deere 135 Mid-Size Excavator, 1-CAT D6 XE Dozer, 2-Bobcat T770 Compact Track Loader, 1-John Deere 333P Compact Track Loader, 1-CAT CP56B Compactor, 1-CAT CS563E Smooth Drum Roller, 1-John Deere 755D Crawler Loader, 1-Fuel Truck, 1-4,000 Gal. Water Truck, 1-McElroy Tracstar Series 2 Fusion Machine

Work Areas/Boundaries

Existing Ash Pond

Testing Equipment Used/Observed and Calibration/Re-Calibration Documentation

NA

Tests Completed/Observed

NA

Work Comments/Observations and Test Results

6:00 - The contractor continued excavating the anchor trench. SCS staff surveyed the geomembrane panels placed the day prior.
6:45 - CAAW continued placing geomembrane, starting in the northwest corner of the closure area. One trial weld failed in the morning. CAAW worked on tuning the corresponding machine. After tuning, the machine produced trial welds that passed testing. Geomembrane placement continued for the remainder of the day. Panels 29 through 58 were placed in the northwest and southeast corners of the closure area.
5:00 - CAAW left the site.
5:30 - SCS staff surveyed the geomembrane panels placed for the day.
6:15 - SCS staff left the site.

Material(s) Delivered to Site

NA

Construction Observer

Chris Calhoun, Matthew Kuhlenengel

SCS ENGINEERS

DAILY FIELD ACTIVITIES REPORT

Client Name:	Ames Municipal Electric System	**Date:**	May 25, 2025
SCS Engineers Project Name:	Ames Ash Pond Closure	**Start Time:**	6:15 AM
SCS Engineers Project No:	27219356.02	**Stop Time:**	12:30 PM
Project Location:	Ames Municipal Electric System Ash Ponds Ames, Iowa		

Task: *Geomembrane Placement*

Weather Information

59°, Cloudy, Winds from NE at 9 mph

Contractors, Personnel, and Equipment On Site

Contractors: Clean Air and Water (CAAW) Personnel: CAAW - 13
Equipment: 1-John Deere 380G Excavator, 1-John Deere 135 Mid-Size Excavator, 1-CAT D6 XE Dozer, 2-Bobcat T770 Compact Track Loader, 1-John Deere 333P Compact Track Loader, 1-CAT CP56B Compactor, 1-CAT CS563E Smooth Drum Roller, 1-John Deere 755D Crawler Loader, 1-Fuel Truck, 1-4,000 Gal. Water Truck, 1-McElroy Tracstar Series 2 Fusion Machine

Work Areas/Boundaries

Existing Ash Pond

Testing Equipment Used/Observed and Calibration/Re-Calibration Documentation

NA

Tests Completed/Observed

NA

Work Comments/Observations and Test Results

6:15 - CAAW continued placing geomembrane, starting on the south side of the closure area. Geomembrane placement continued for the remainder of the morning. Panels 59 through 78 were placed in the southwest corner of the closure area.
11:30 - SCS staff surveyed the geomembrane panels placed for the day.
12:30 - SCS staff left the site.

Material(s) Delivered to Site

NA

Construction Observer

Chris Calhoun

SCS ENGINEERS

DAILY FIELD ACTIVITIES REPORT

Client Name:	Ames Municipal Electric System	**Date:**	May 27, 2025
SCS Engineers Project Name:	Ames Ash Pond Closure	**Start Time:**	6:15 AM
SCS Engineers Project No:	27219356.02	**Stop Time:**	6:45 PM
Project Location:	Ames Municipal Electric System Ash Ponds Ames, Iowa		

Task: *Geomembrane Repairs, Destructs, Stormwater Piping*

Weather Information

62°, Cloudy with scattered rain showers throughout the day, Winds from NE at 9 mph

Contractors, Personnel, and Equipment On Site

Contractors: JB Holland (JBH), Clean Air and Water (CAAW) Personnel: JBH - 4, CAAW - 13
Equipment: 1-John Deere 380G Excavator, 1-John Deere 135 Mid-Size Excavator, 1-CAT D6 XE Dozer, 2-Bobcat T770 Compact Track Loader, 1-John Deere 333P Compact Track Loader, 1-CAT CP56B Compactor, 1-CAT CS563E Smooth Drum Roller, 1-John Deere 755D Crawler Loader, 1-Fuel Truck, 1-4,000 Gal. Water Truck, 1-McElroy Tracstar Series 2 Fusion Machine

Work Areas/Boundaries

Existing Ash Pond

Testing Equipment Used/Observed and Calibration/Re-Calibration Documentation

NA

Tests Completed/Observed

NA

Work Comments/Observations and Test Results

6:15 - The liner crew began blow drying the geomembrane to prepare for repairs in the northwest and southwest corners of the closure area.
6:45 - The liner crew began tack welding patches to the geomembrane at repair locations. Trial welds were performed for each repair seamer and machine.
7:30 - Rain began to fall at the site and geomembrane repair operations were paused.
9:00 - After the rain had ceased and the geomembrane was dried off, the liner crew began grinding the geomembrane surfaces to prepare for extrusion welding. Once the surfaces were adequately prepared, the seamers began extrusion welding the geomembrane repair patches.
9:15 - SCS staff began marking seams for destructive testing. The liner crew cut panels out at the marked locations for field and lab testing. Four destructs were pulled for testing before it started raining.
9:50 - Rain began falling at the site and geomembrane repair operations were once again paused. Due to the forecasted rain, welding operations ceased for the remainder of the day.
10:00 - JB Holland began excavating the pipe trench for the stormwater piping near the southeast corner of the closure area.
11:15 - JB Holland began excavation for the installation of the area intake near the southeast corner of the closure area.
12:00 - JB Holland began placing and compacting the sand bedding for the southeast stormwater piping. Rock bedding for the area intake was also placed.
12:15 - The area intake was placed.
12:30 - The liner crew continued pulling destructs for testing. 21 destructs were pulled and field tested in total for the day. A portion of each destruct was shipped out for laboratory testing later in the day.
1:30 - JB Holland began placing the southeast stormwater piping.
3:30 - JB Holland began backfilling around the stormwater pipe with sand.
5:30 - SCS staff surveyed top of stormwater pipe evelevations and geomembrane repair/destruct locations.
6:40 - JB Holland began excavating the pipe trench for the stormwater piping near the northeast corner of the closure area.
6:45 - SCS staff left the site.

Material(s) Delivered to Site

Sand and drainage aggregate

Construction Observer

Chris Calhoun

SCS ENGINEERS

DAILY FIELD ACTIVITIES REPORT

Client Name:	Ames Municipal Electric System	**Date:**	May 28, 2025
SCS Engineers Project Name:	Ames Ash Pond Closure	**Start Time:**	6:00 AM
SCS Engineers Project No:	27219356.02	**Stop Time:**	6:45 PM
Project Location:	Ames Municipal Electric System Ash Ponds Ames, Iowa		

Task: *Geomembrane Repairs, Destructs, Stormwater Piping*

Weather Information

66°, Cloudy, Winds from NW at 8 mph

Contractors, Personnel, and Equipment On Site

Contractors: JB Holland (JBH), Clean Air and Water (CAAW) Personnel: JBH - 4, CAAW - 13
Equipment: 1-John Deere 380G Excavator, 1-John Deere 135 Mid-Size Excavator, 1-CAT D6 XE Dozer, 2-Bobcat T770 Compact Track Loader, 1-John Deere 333P Compact Track Loader, 1-CAT CP56B Compactor, 1-CAT CS563E Smooth Drum Roller, 1-John Deere 755D Crawler Loader, 1-Fuel Truck, 1-4,000 Gal. Water Truck, 1-McElroy Tracstar Series 2 Fusion Machine

Work Areas/Boundaries

Existing Ash Pond

Testing Equipment Used/Observed and Calibration/Re-Calibration Documentation

NA

Tests Completed/Observed

NA

Work Comments/Observations and Test Results

6:30 - The liner crew continued extrusion welding geomembrane repairs. This activity continued through the afternoon. Trial welds were performed and field tested in the morning and after lunch. Pipe boots were installed on the dual contact water cleanouts in the southwest, northwest, and northeast corners of the closure area throughout the day.
7:00 - JB Holland continued trenching, bedding, and placing the stormwater piping near the northeast corner of the closure area. This activity continued through the morning and early afternoon.
1:00 - JB Holland installed the concrete apron near the northeast corner of the closure area.
1:15 - SCS staff surveyed the northeast stormwater piping and concrete apron.
1:30 - The liner crew began vacuum box testing the extrusion weld seams on the geomembrane repairs. .
2:30 - Two extrusion weld destructs were marked and pulled for field and lab testing.
4:00 - JB Holland installed a short 2" HDPE pipe stub from the vault for the contact water forcemain.
4:15 - The liner crew left the site for the day.
5:45 - SCS staff surveyed geomembrane repair and destruct locations.
6:40 - JB Holland installed the concrete apron near the southeast corner of the closure area.
6:45 - SCS staff left the site.

Material(s) Delivered to Site

4" Toe Drain Pipe, Geotextile Fabric

Construction Observer

Chris Calhoun

SCS ENGINEERS

DAILY FIELD ACTIVITIES REPORT

Client Name:	Ames Municipal Electric System	**Date:**	May 29, 2025
SCS Engineers Project Name:	Ames Ash Pond Closure	**Start Time:**	6:15 AM
SCS Engineers Project No:	27219356.02	**Stop Time:**	6:30 PM
Project Location:	Ames Municipal Electric System Ash Ponds Ames, Iowa		

Task: *Geocomposite Placement, Toe Drain, Contact Water Forcemain, Stormwater Structures/Piping*

Weather Information

69°, Partly Cloudy, Winds from NW at 8 mph

Contractors, Personnel, and Equipment On Site

Contractors: JB Holland (JBH), Clean Air and Water (CAAW) Personnel: JBH - 5, CAAW - 13
Equipment: 1-John Deere 380G Excavator, 1-John Deere 135 Mid-Size Excavator, 1-CAT D6 XE Dozer, 2-Bobcat T770 Compact Track Loader, 1-John Deere 333P Compact Track Loader, 1-CAT CP56B Compactor, 1-CAT CS563E Smooth Drum Roller, 1-John Deere 755D Crawler Loader, 1-Fuel Truck, 1-4,000 Gal. Water Truck, 1-McElroy Tracstar Series 2 Fusion Machine

Work Areas/Boundaries

Existing Ash Pond

Testing Equipment Used/Observed and Calibration/Re-Calibration Documentation

NA

Tests Completed/Observed

NA

Work Comments/Observations and Test Results

6:30 - The liner crew began placing geocomposite over the geomembrane in the closure area. The geonet panel connections were ziptied and the seams of the top layer of geotextile were sewn. This activity continued for a majority of the day. The completed area of geocomposite placement for the day was the north slope, northeast corner, and a portion of the west slope.
8:45 - JB Holland began placing geotextile fabric and drainage aggregate in the portions of the anchor trench that had received geocomposite.
9:30 - JB Holland installed concrete forms for the collars at the stormwater pipe connections into the area intake near the southeast corner of the closure area.
11:15 - Concrete was poured into the forms at the area intake. Concrete was also poured inside the area intake and shaped to promote drainage through the structure.
1:00 - JB Holland began excavating the trench for the 2" contact water forcemain and placing the sand bedding.
2:00 - JB Holland began placing the 4" toe drain into the anchor trench. SCS staff surveyed the toe drain pipe as it was placed. After the pipe was surveyed, drainage aggregate was backfilled around the pipe and the geotextile fabric was closed.
4:30 - JB Holland placed and welded sections of 2" forcemain in the excavated portion of pipe trench. SCS staff surveyed the pipe.
5:00 - The liner crew began cleaning up material scraps and left the site for the day.
6:00 - Foam insulation board was placed over a portion of 2" forcemain just outside of the contact water collection vault. Sand was was backfilled and compacted over the pipe and insulation board. Green tracer wire was run along the sand bedding above the pipe.
6:30 - SCS staff left the site.

Material(s) Delivered to Site

Sand, Drainage Aggregate

Construction Observer

Chris Calhoun

SCS ENGINEERS

DAILY FIELD ACTIVITIES REPORT

Client Name:	Ames Municipal Electric System	**Date:**	May 30, 2025
SCS Engineers Project Name:	Ames Ash Pond Closure	**Start Time:**	6:15 AM
SCS Engineers Project No:	27219356.02	**Stop Time:**	5:30 PM
Project Location:	Ames Municipal Electric System Ash Ponds Ames, Iowa		

Task: *Geocomposite Placement, Toe Drain, Contact Water Forcemain*

Weather Information

79°, Partly Cloudy, Winds from NW at 14 mph

Contractors, Personnel, and Equipment On Site

Contractors: JB Holland (JBH), Clean Air and Water (CAAW) Personnel: JBH - 5, CAAW - 13
Equipment: 1-John Deere 380G Excavator, 1-John Deere 135 Mid-Size Excavator, 1-CAT D6 XE Dozer, 2-Bobcat T770 Compact Track Loader, 1-John Deere 333P Compact Track Loader, 1-Volvo Dump Truck, 1-CAT CP56B Compactor, 1-CAT CS563E Smooth Drum Roller, 1-John Deere 755D Crawler Loader, 1-Fuel Truck, 1-4,000 Gal. Water Truck, 1-McElroy Tracstar Series 2 Fusion Machine

Work Areas/Boundaries

Existing Ash Pond

Testing Equipment Used/Observed and Calibration/Re-Calibration Documentation

NA

Tests Completed/Observed

NA

Work Comments/Observations and Test Results

6:15 - The liner crew continued placing the geocomposite over the geomembrane in the closure area. This activity continued for a majority of the day. The completed area of geocomposite placement for the day was the remainder of the northwest corner, the southeast corner, and a portion of the southwest corner.
7:45 - JB Holland continued excavating the trench for the 2" contact water forcemain and placing the sand bedding. The contractor switched to drainage aggregate bedding while excavating between the the east and west clearwater ponds as water was infiltrating the bottom of the trench.
8:00 - JB Holland continued placing geotextile fabric, drainage aggregate, and 4" toe drain pipe in the anchor trench as geocomposite placement progressed. SCS staff surveyed the pipe as it was placed. Once surveyed, the pipe was covered with drainage aggregate and the geotextile fabric was closed. This activity continued for a majority of the day.
12:15 - JB Holland placed 2" forcemain pipe in the trench between the clearwater ponds and fusion welded it to the section of pipe installed the day prior. SCS staff surveyed the pipe.
2:30 - JB Holland finished excavating the remainder of the contact water forcemain trench. The contractor siwtched back to sand bedding once the trench was up and out of the low area between the clearwater ponds.
4:00 - JB Holland placed and welded the final sections of 2" forcemain. SCS staff surveyed the pipe. The contractor began backfilling over the pipe with sand and installed the tracer wire. Once the tracer wire was placed, the contractor began backfilling the trench with soil.
5:15 - The liner crew began cleaning up material scraps and left the site for the day.
5:30 - SCS staff left the site.

Material(s) Delivered to Site

Drainage Aggregate

Construction Observer

Chris Calhoun

SCS ENGINEERS

DAILY FIELD ACTIVITIES REPORT

Client Name:	Ames Municipal Electric System	**Date:**	May 31, 2025
SCS Engineers Project Name:	Ames Ash Pond Closure	**Start Time:**	6:15 AM
SCS Engineers Project No:	27219356.02	**Stop Time:**	3:30 PM
Project Location:	Ames Municipal Electric System Ash Ponds Ames, Iowa		

Task: *Geocomposite Placement, Geomembrane Placement, Geomembrane Repairs*

Weather Information

82°, Partly Cloudy, Winds from NW at 5 mph

Contractors, Personnel, and Equipment On Site

Contractors: Clean Air and Water (CAAW) Personnel: CAAW - 13
Equipment: 1-John Deere 380G Excavator, 1-John Deere 135 Mid-Size Excavator, 1-CAT D6 XE Dozer, 2-Bobcat T770 Compact Track Loader, 1-John Deere 333P Compact Track Loader, 1-Volvo Dump Truck, 1-CAT CP56B Compactor, 1-CAT CS563E Smooth Drum Roller, 1-John Deere 755D Crawler Loader, 1-Fuel Truck, 1-4,000 Gal. Water Truck, 1-McElroy Tracstar Series 2 Fusion Machine

Work Areas/Boundaries

Existing Ash Pond

Testing Equipment Used/Observed and Calibration/Re-Calibration Documentation

NA

Tests Completed/Observed

NA

Work Comments/Observations and Test Results

6:15 - The liner crew continued placing the geocomposite over the geomembrane in the southwest corner of the closure area.
10:45 - The liner crew cleaned the edge of geomembrane panels P-38, P-39, and P-40 to prepare for the placement and welding of the final panel (P-79).
11:20 - The liner crew placed the final panel of geomembrane. The panel was subsequently fusion welded to the adjacent panels. A small puncture was found in P-79 on the west slope and was marked for repair.
1:30 - The liner crew began air testing the final seams and prepared to make geomembrane repairs.
2:00 - The liner crew began extrusion welding geomembrane repair patches. The extrusion weld seams were subsequently vacuum box tested.
2:30 - The liner crew began placing the final panels of geocomposite over the geomembrane.
3:30 - SCS staff left the site.

Material(s) Delivered to Site

NA

Construction Observer

Chris Calhoun

SCS ENGINEERS

DAILY FIELD ACTIVITIES REPORT

Client Name:	Ames Municipal Electric System	**Date:**	June 2, 2025
SCS Engineers Project Name:	Ames Ash Pond Closure	**Start Time:**	8:30 AM
SCS Engineers Project No:	27219356.02	**Stop Time:**	6:15 PM
Project Location:	Ames Municipal Electric System Ash Ponds Ames, Iowa		

Task: *Toe Drain Installation*

Weather Information

87°, Sunny, Winds from S at 22 mph

Contractors, Personnel, and Equipment On Site

Contractors: JB Holland (JBH) Personnel: JBH - 3
Equipment: 1-John Deere 380G Excavator, 1-John Deere 135 Mid-Size Excavator, 1-CAT D6 XE Dozer, 2-Bobcat T770 Compact Track Loader, 1-John Deere 333P Compact Track Loader, 1-Volvo Dump Truck, 1-CAT CP56B Compactor, 1-CAT CS563E Smooth Drum Roller, 1-John Deere 755D Crawler Loader, 1-Fuel Truck, 1-4,000 Gal. Water Truck, 1-McElroy Tracstar Series 2 Fusion Machine

Work Areas/Boundaries

Existing Ash Pond

Testing Equipment Used/Observed and Calibration/Re-Calibration Documentation

NA

Tests Completed/Observed

NA

Work Comments/Observations and Test Results

8:30 - JB Holland used a plate compactor to compact the backfill over the contact water forcemain trench.
9:30 - JB Holland continued placing geotextile fabric, drainage aggregate, and 4" toe drain pipe in the anchor trench. SCS staff surveyed the pipe as it was placed. Once surveyed, the pipe was covered with drainage aggregate and the geotextile fabric was closed. This activity continued through the afternoon.
12:30 - JB Holland excavated the trench for the north toe drain outlet pipe. Sand bedding was placed in the bottom of the trench.
2:30 - JB Holland fusion welded the HDPE toe drain fittings to the north and south toe drain outlet pipes.
5:00 - JB Holland installed the south toe drain outlet piping in the anchor trench and area intake structure. SCS staff surveyed the pipe and fittings. Bentonite was placed around the perforated to solid connections.
5:45 - JB Holland installed the north toe drain outlet piping. SCS staff surveyed the pipe and fittings.
6:15 - SCS staff left the site.

Material(s) Delivered to Site

NA

Construction Observer

Chris Calhoun

SCS ENGINEERS

DAILY FIELD ACTIVITIES REPORT

Client Name:	Ames Municipal Electric System	**Date:**	June 4, 2025
SCS Engineers Project Name:	Ames Ash Pond Closure	**Start Time:**	8:00 AM
SCS Engineers Project No:	27219356.02	**Stop Time:**	5:00 PM
Project Location:	Ames Municipal Electric System Ash Ponds Ames, Iowa		

Task: *Cover Protective Soil Placement, Stormwater Outlet Rock Chutes*

Weather Information

76°, Sunny, Winds from NE at 6 mph

Contractors, Personnel, and Equipment On Site

Contractors: JB Holland (JBH) Personnel: JBH - 4
Equipment: 1-John Deere 380G Excavator, 1-John Deere 135 Mid-Size Excavator, 1-CAT D6 XE Dozer, 1-CAT D6N LGP Dozer, 1-Bobcat T770 Compact Track Loader, 1-Volvo Dump Truck, 1-CAT CP56B Compactor, 1-CAT CS563E Smooth Drum Roller, 1-John Deere 755D Crawler Loader, 1-Fuel Truck, 1-4,000 Gal. Water Truck, 1-McElroy Tracstar Series 2 Fusion Machine

Work Areas/Boundaries

Existing Ash Pond

Testing Equipment Used/Observed and Calibration/Re-Calibration Documentation

NA

Tests Completed/Observed

NA

Work Comments/Observations and Test Results

8:00 - JB Holland used a dozer to clean up the perimeter roads to prepare for cover protective soil hauling after the rain the day prior.
10:30 - JB Holland began hauling cover protective soil from the on-site west soil stockpile. Soil was initially dumped on the north and west perimeter sides of the closure area. Soil hauling continued for the entirety of the work day.
11:00 - JB Holland began pushing the cover protective soil up the 4:1 slopes in the closure area. This activity continued for the remainder of the day.
1:15 - JB Holland began excavation for the installation of the rock chute at the south stormwater pipe outlet.
3:30 - Haul trucks began dumping soil on the southern perimeter of the closure area. The dozer operator pushed the soil up the south closure slope.
4:30 - JB Holland placed the geotextile fabric for the rock chute at the south stormwater pipe outlet.
5:00 - SCS staff left the site.

Material(s) Delivered to Site

42.5 Tons of Erosion Stone

Construction Observer

Chris Calhoun

SCS ENGINEERS

DAILY FIELD ACTIVITIES REPORT

Client Name:	Ames Municipal Electric System	**Date:**	June 5, 2025
SCS Engineers Project Name:	Ames Ash Pond Closure	**Start Time:**	8:30 AM
SCS Engineers Project No:	27219356.02	**Stop Time:**	5:00 PM
Project Location:	Ames Municipal Electric System Ash Ponds Ames, Iowa		

Task: *Cover Protective Soil Placement, Stormwater Outlet Rock Chutes*

Weather Information

78°, Sunny, Winds from SE at 8 mph

Contractors, Personnel, and Equipment On Site

Contractors: JB Holland (JBH) Personnel: JBH - 4
Equipment: 1-John Deere 380G Excavator, 1-John Deere 135 Mid-Size Excavator, 1-CAT D6 XE Dozer, 1-CAT D6N LGP Dozer, 1-Bobcat T770 Compact Track Loader, 1-Volvo Dump Truck, 1-CAT CP56B Compactor, 1-CAT CS563E Smooth Drum Roller, 1-John Deere 755D Crawler Loader, 1-Fuel Truck, 1-4,000 Gal. Water Truck, 1-McElroy Tracstar Series 2 Fusion Machine

Work Areas/Boundaries

Existing Ash Pond

Testing Equipment Used/Observed and Calibration/Re-Calibration Documentation

NA

Tests Completed/Observed

NA

Work Comments/Observations and Test Results

8:30 - JB Holland graded the cover protective soils on the 4:1 slopes of the closure area.
10:00 - JB Holland began excavation for the installation of the rock chute at the north stormwater pipe outlet.
11:30 - JB Holland cotinued hauling cover protective soil from the on-site west soil stockpile. Soil was initially dumped on the south side of the closure area. The dozer operator pushed the soil up the closure slopes. Soil hauling and placement continued for the remainder of the work day.
1:00 - JB Holland placed the geotextile fabric and set stakes for the rock chute at the north stormwater pipe outlet.
1:30 - Haul trucks began dumping soil on the northern perimeter of the closure area.
1:40 - JB Holland placed the erosion stone for the rock chute at the north stormwater pipe outlet.
4:15 - JB Holland finished placing the erosion stone for the rock chute at the south stormwater pipe outlet.
4:30 - Haul trucks began dumping soil on the eastern perimeter of the closure area.
5:00 - SCS staff left the site.

Material(s) Delivered to Site

60.59 Tons of Erosion Stone

Construction Observer

Chris Calhoun

SCS ENGINEERS

DAILY FIELD ACTIVITIES REPORT

Client Name:	Ames Municipal Electric System	**Date:**	June 6, 2025
SCS Engineers Project Name:	Ames Ash Pond Closure	**Start Time:**	8:30 AM
SCS Engineers Project No:	27219356.02	**Stop Time:**	3:30 PM
Project Location:	Ames Municipal Electric System Ash Ponds Ames, Iowa		

Task: *Cover Protective Soil Placement, Contact Water Collection Vault*

Weather Information

76°, Mostly Cloudy, Winds Calm

Contractors, Personnel, and Equipment On Site

Contractors: JB Holland (JBH) Personnel: JBH - 4
Equipment: 1-John Deere 380G Excavator, 1-John Deere 135 Mid-Size Excavator, 1-CAT D6 XE Dozer, 1-CAT D6N LGP Dozer, 1-Bobcat T770 Compact Track Loader, 1-Volvo Dump Truck, 1-CAT CP56B Compactor, 1-CAT CS563E Smooth Drum Roller, 1-John Deere 755D Crawler Loader, 1-Fuel Truck, 1-4,000 Gal. Water Truck, 1-McElroy Tracstar Series 2 Fusion Machine

Work Areas/Boundaries

Existing Ash Pond

Testing Equipment Used/Observed and Calibration/Re-Calibration Documentation

NA

Tests Completed/Observed

NA

Work Comments/Observations and Test Results

8:30 - JB Holland continued hauling cover protective soil from the on-site west soil stockpile. Soil was dumped on the east side of the closure area. The dozer operator pushed the soil up the closure slopes. Soil hauling and placement continued for the remainder of the work day.
9:00 - JB Holland worked on the internal plumbing of the contact water collection vault. This actvity continued throughout the day.
3:00 - Trucks stopped hauling soil for the day.
3:30 - SCS staff left the site.

Material(s) Delivered to Site

NA

Construction Observer

Chris Calhoun

SCS ENGINEERS

DAILY FIELD ACTIVITIES REPORT

Client Name:	Ames Municipal Electric System	**Date:**	June 9, 2025
SCS Engineers Project Name:	Ames Ash Pond Closure	**Start Time:**	9:00 AM
SCS Engineers Project No:	27219356.02	**Stop Time:**	5:00 PM
Project Location:	Ames Municipal Electric System Ash Ponds Ames, Iowa		

Task: *Cover Protective Soil Placement*

Weather Information

69°, Partly Cloudy, Winds from NW at 15-20 mph

Contractors, Personnel, and Equipment On Site

Contractors: JB Holland (JBH) Personnel: JBH - 3
Equipment: 1-John Deere 380G Excavator, 1-John Deere 135 Mid-Size Excavator, 1-CAT D6 XE Dozer, 1-CAT D6N LGP Dozer, 1-Bobcat T770 Compact Track Loader, 1-Volvo Dump Truck, 1-CAT CP56B Compactor, 1-CAT CS563E Smooth Drum Roller, 1-John Deere 755D Crawler Loader, 1-Fuel Truck, 1-4,000 Gal. Water Truck, 1-McElroy Tracstar Series 2 Fusion Machine

Work Areas/Boundaries

Existing Ash Pond

Testing Equipment Used/Observed and Calibration/Re-Calibration Documentation

NA

Tests Completed/Observed

NA

Work Comments/Observations and Test Results

9:00 - JB Holland continued hauling cover protective soil from the on-site west soil stockpile and pushed the soil up the 10:1 slopes on the east side of the closure area. Soil hauling and placement continued for the remainder of the work day.
2:45 - The contractor began dumping and pushing cover soil up the slope on the west side of the closure area.
5:00 - SCS staff left the site.

Material(s) Delivered to Site

NA

Construction Observer

Chris Calhoun

SCS ENGINEERS

DAILY FIELD ACTIVITIES REPORT

Client Name:	Ames Municipal Electric System	**Date:**	June 10, 2025
SCS Engineers Project Name:	Ames Ash Pond Closure	**Start Time:**	8:20 AM
SCS Engineers Project No:	27219356.02	**Stop Time:**	5:20 PM
Project Location:	Ames Municipal Electric System Ash Ponds Ames, Iowa		

Task: *Cover Protective Soil Placement, Contact Water Forcemain and Vault*

Weather Information

83°, Partly Cloudy, Winds from W at 10 mph

Contractors, Personnel, and Equipment On Site

Contractors: JB Holland (JBH) Personnel: JBH - 5
Equipment: 1-John Deere 380G Excavator, 1-John Deere 135 Mid-Size Excavator, 1-CAT D6 XE Dozer, 1-CAT D6N LGP Dozer, 1-Bobcat T770 Compact Track Loader, 1-Volvo Dump Truck, 1-CAT CP56B Compactor, 1-CAT CS563E Smooth Drum Roller, 1-John Deere 755D Crawler Loader, 1-Fuel Truck, 1-4,000 Gal. Water Truck, 1-McElroy Tracstar Series 2 Fusion Machine

Work Areas/Boundaries

Existing Ash Pond

Testing Equipment Used/Observed and Calibration/Re-Calibration Documentation

NA

Tests Completed/Observed

NA

Work Comments/Observations and Test Results

8:20 - JB Holland began hauling cover soils from the offsite borrow source. Soil from the offsite borrow was dumped on the west side of the closure area and pushed up the slope with a dozer. The contractor also continued hauling the remaining soil from the on-site soil stockpile and dumped it on the south side of the closue area. This activity continued for the remainder of the work day.
11:15 - JB Holland lowered the pump and discharge pipe down the contact water riser pipe and into the sump to verify the pump cables had sufficient length.
12:45 - JB Holland welded a hose connection on the outlet end of the contact water forcemain to fill the pipe with water and prepare for hydro-testing.
2:00 - JB Holland hooked up the hydro-test apparatus at the vault end of the contact water forcemain and began filling the pipe with water. The pipe was filled with water until the pressure gauge had a reading of just over 100 psi. The contractor let the system sit to allow the pipe time to expand and periodically filled the pipe with additional water to maintain a pressure slightly above 100 psi. The contractor planned to perform the hydro-test the following morning.
4:00 - JB Holland continued working on the internal plumbing of the contact water vault.
5:20 - SCS staff left the site.

Material(s) Delivered to Site

NA

Construction Observer

Chris Calhoun

SCS ENGINEERS

DAILY FIELD ACTIVITIES REPORT

Client Name:	Ames Municipal Electric System	**Date:**	June 11, 2025
SCS Engineers Project Name:	Ames Ash Pond Closure	**Start Time:**	8:20 AM
SCS Engineers Project No:	27219356.02	**Stop Time:**	5:00 PM
Project Location:	Ames Municipal Electric System Ash Ponds Ames, Iowa		

Task: *Cover Soil Placement, Contact Water Forcemain, Vault, & Cleanouts*

Weather Information

93°, Partly Cloudy, Winds from SW at 10 mph

Contractors, Personnel, and Equipment On Site

Contractors: JB Holland (JBH) Personnel: JBH - 5
Equipment: 1-John Deere 380G Excavator, 1-John Deere 135 Mid-Size Excavator, 1-CAT D6 XE Dozer, 1-CAT D6N LGP Dozer, 1-Bobcat T770 Compact Track Loader, 1-Volvo Dump Truck, 1-CAT CP56B Compactor, 1-CAT CS563E Smooth Drum Roller, 1-John Deere 755D Crawler Loader, 1-Fuel Truck, 1-4,000 Gal. Water Truck, 1-McElroy Tracstar Series 2 Fusion Machine

Work Areas/Boundaries

Existing Ash Pond

Testing Equipment Used/Observed and Calibration/Re-Calibration Documentation

NA

Tests Completed/Observed

NA

Work Comments/Observations and Test Results

8:20 - JB Holland continued hauling and placing cover protective soil and topsoil on the west and south slopes of the closure area. This activity continued for the remainder of the work day.
8:45 - JB Holland began the hydro-test for the contact water forcemain pipe, starting at a pressure of just over 100 psi. The pressure gauge was checked after an hour and the pressure had dropped by approximately 2-3 psi. These results generally indicate that there is no leakage in the system.
11:00 - JB Holland continued working on the internal plumbing of the contact water vault.
12:45 - JB Holland excavated for installation of the geotextile fabric and erosion stone at the contact water forcemain outlet.
2:30 - JB Holland placed the erosion stone and protective aggregate for the contact water forcemain outlet.
4:30 - The contractor used an excavator to begin clearing vegetation on the northern perimeter of the site.
4:45 - The contractor began extending the contact water cleanouts and welding the end caps in the southwest corner of the closure area.
5:00 - SCS staff left the site.

Material(s) Delivered to Site

NA

Construction Observer

Chris Calhoun

SCS ENGINEERS

DAILY FIELD ACTIVITIES REPORT

Client Name:	Ames Municipal Electric System	**Date:**	June 12, 2025
SCS Engineers Project Name:	Ames Ash Pond Closure	**Start Time:**	8:15 AM
SCS Engineers Project No:	27219356.02	**Stop Time:**	5:00 PM
Project Location:	Ames Municipal Electric System Ash Ponds Ames, Iowa		

Task: *Cover Soil Placement, Animal Guards, Contact Water Cleanouts, Vegetation Clearing*

Weather Information

87°, Mostly Cloudy, Winds from SE at 8 mph

Contractors, Personnel, and Equipment On Site

Contractors: JB Holland (JBH) Personnel: JBH - 3
Equipment: 1-John Deere 380G Excavator, 1-John Deere 135 Mid-Size Excavator, 1-CAT D6 XE Dozer, 1-CAT D6N LGP Dozer, 1-Bobcat T770 Compact Track Loader, 1-Volvo Dump Truck, 1-CAT CP56B Compactor, 1-CAT CS563E Smooth Drum Roller, 1-John Deere 755D Crawler Loader, 1-Fuel Truck, 1-4,000 Gal. Water Truck, 1-McElroy Tracstar Series 2 Fusion Machine

Work Areas/Boundaries

Existing Ash Pond

Testing Equipment Used/Observed and Calibration/Re-Calibration Documentation

NA

Tests Completed/Observed

NA

Work Comments/Observations and Test Results

8:15 - JB Holland continued hauling and placing cover protective soil and topsoil on the south and east slopes of the closure area. This activity continued for the remainder of the work day.
8:15 - The contractor extended the contact water cleanouts and welded the end caps to the cleanouts in the northeast and northwest corners of the closure area.
10:30 - JB Holland installed the animal guards on the 10" toe drain outlet pipes and the 2" contact water forcemain outlet pipe.
3:00 - The contractor used an excavator to clear vegetation adjacent to the access road on the eastern perimeter of the site.
5:00 - SCS staff left the site.

Material(s) Delivered to Site

NA

Construction Observer

Chris Calhoun

SCS ENGINEERS

DAILY FIELD ACTIVITIES REPORT

Client Name:	Ames Municipal Electric System	**Date:**	June 13, 2025
SCS Engineers Project Name:	Ames Ash Pond Closure	**Start Time:**	8:30 AM
SCS Engineers Project No:	27219356.02	**Stop Time:**	3:45 PM
Project Location:	Ames Municipal Electric System Ash Ponds Ames, Iowa		

Task: *Cover Soil Placement, Vegetation Clearing*

Weather Information

83°, Partly Cloudy, Winds from SE at 12 mph

Contractors, Personnel, and Equipment On Site

Contractors: JB Holland (JBH) Personnel: JBH - 3
Equipment: 1-John Deere 380G Excavator, 1-John Deere 135 Mid-Size Excavator, 1-CAT D6 XE Dozer, 1-CAT D6N LGP Dozer, 1-Bobcat T770 Compact Track Loader, 1-Volvo Dump Truck, 1-CAT CP56B Compactor, 1-CAT CS563E Smooth Drum Roller, 1-John Deere 755D Crawler Loader, 1-Fuel Truck, 1-4,000 Gal. Water Truck, 1-McElroy Tracstar Series 2 Fusion Machine

Work Areas/Boundaries

Existing Ash Pond

Testing Equipment Used/Observed and Calibration/Re-Calibration Documentation

NA

Tests Completed/Observed

NA

Work Comments/Observations and Test Results

8:30 - JB Holland continued hauling and placing cover protective soil and topsoil on the east and north slopes of the closure area. This activity continued for the remainder of the work day.
8:30 - The contractor continued clearing vegetation adjacent to the access road on the eastern perimeter of the site.
12:00 - The contractor cleared vegetation along the northern perimeter of the site.
3:15 - The contractor began shutting down haul trucks for the day.
3:45 - SCS staff left the site.

Material(s) Delivered to Site

NA

Construction Observer

Chris Calhoun

SCS ENGINEERS

DAILY FIELD ACTIVITIES REPORT

Client Name:	Ames Municipal Electric System	**Date:**	June 16, 2025
SCS Engineers Project Name:	Ames Ash Pond Closure	**Start Time:**	9:00 AM
SCS Engineers Project No:	27219356.02	**Stop Time:**	5:00 PM
Project Location:	Ames Municipal Electric System Ash Ponds Ames, Iowa		

Task: *General Fill Placement, Cover Soil Placement, Dewatering*

Weather Information

88°, Mostly Cloudy, Winds from S at 12 mph

Contractors, Personnel, and Equipment On Site

Contractors: JB Holland (JBH) Personnel: JBH - 4
Equipment: 1-John Deere 380G Excavator, 1-CAT D6 XE Dozer, 1-Bobcat T770 Compact Track Loader, 1-Volvo Dump Truck, 1-CAT CP56B Compactor, 1-CAT CS563E Smooth Drum Roller, 1-John Deere 755D Crawler Loader, 1-Fuel Truck, 1-4,000 Gal. Water Truck, 1-McElroy Tracstar Series 2 Fusion Machine

Work Areas/Boundaries

Existing Ash Pond

Testing Equipment Used/Observed and Calibration/Re-Calibration Documentation

NA

Tests Completed/Observed

NA

Work Comments/Observations and Test Results

9:00 - JB Holland worked to clean up the perimeter roads after the overnight rain.
10:30 - The contractor placed general fill on the east sideslope of the pond area. The placed fill material was taken from the overbuilt section of the slope in the southeast corner of the pond.
1:00 - The contractor placed cover protective soil in the northeast corner of the closure area. The placed material was hauled from the onsite west soil stockpile. This activity continued for the remainder of the work day.
[REVIEWER NOTE: the cover soil placed from the west soil stockpile was placed as an 18-inch lift adjacent to the west soil stockpile lift that was placed on the 4:1 slopes. Topsoil from the offsite borrow still needs to be placed. Although out of order, this generally conforms to the placement plan previously discussed with the contractor.]
5:00 - SCS staff left the site.

Material(s) Delivered to Site

NA

Construction Observer

Chris Calhoun

SCS ENGINEERS

DAILY FIELD ACTIVITIES REPORT

Client Name:	Ames Municipal Electric System	**Date:**	June 17, 2025
SCS Engineers Project Name:	Ames Ash Pond Closure	**Start Time:**	9:00 AM
SCS Engineers Project No:	27219356.02	**Stop Time:**	5:00 PM
Project Location:	Ames Municipal Electric System Ash Ponds Ames, Iowa		

Task: *General Fill Placement, Cover Soil Placement*

Weather Information

79°, Cloudy with rain in the afternoon, Winds from S at 5 mph

Contractors, Personnel, and Equipment On Site

Contractors: JB Holland (JBH) Personnel: JBH - 4
Equipment: 1-John Deere 380G Excavator, 1-CAT D6 XE Dozer, 1-Bobcat T770 Compact Track Loader, 1-Volvo Dump Truck, 1-CAT CP56B Compactor, 1-CAT CS563E Smooth Drum Roller, 1-John Deere 755D Crawler Loader, 1-Fuel Truck, 1-4,000 Gal. Water Truck, 1-McElroy Tracstar Series 2 Fusion Machine

Work Areas/Boundaries

Existing Ash Pond

Testing Equipment Used/Observed and Calibration/Re-Calibration Documentation

NA

Tests Completed/Observed

NA

Work Comments/Observations and Test Results

9:00 - The contractor continued placing cover protective soil in the northeast corner of the closure area. The contractor also worked on constructing the diversion berm on the east slope of the closure area.
9:30 - The contractor placed general fill on the east sideslope of the pond area. The placed fill material was hauled from the onsite west soil stockpile.
2:00 - The contractor placed soil on the east slope of the separation berm. The placed material was hauled from the east onsite soil stockpiles.
2:20 - The contractor compacted the general fill placed on the east slope of the pond with the self-propelled compactor.
3:45 - The contractor hauled brush piles to the designated disposal location northwest of the site.
5:00 - SCS staff left the site.

Material(s) Delivered to Site

NA

Construction Observer

Chris Calhoun

SCS ENGINEERS

DAILY FIELD ACTIVITIES REPORT

Client Name:	Ames Municipal Electric System	**Date:**	June 18, 2025
SCS Engineers Project Name:	Ames Ash Pond Closure	**Start Time:**	9:00 AM
SCS Engineers Project No:	27219356.02	**Stop Time:**	11:00 PM
Project Location:	Ames Municipal Electric System Ash Ponds Ames, Iowa		

Task: *Rain Day, Soil Samples*

Weather Information

70°, Cloudy, Winds from NE at 6 mph

Contractors, Personnel, and Equipment On Site

Contractors: JB Holland (JBH) Personnel: JBH - 3
Equipment: 1-John Deere 380G Excavator, 1-CAT D6 XE Dozer, 1-Bobcat T770 Compact Track Loader, 1-Volvo Dump Truck, 1-CAT CP56B Compactor, 1-CAT CS563E Smooth Drum Roller, 1-John Deere 755D Crawler Loader, 1-Fuel Truck, 1-4,000 Gal. Water Truck, 1-McElroy Tracstar Series 2 Fusion Machine

Work Areas/Boundaries

Existing Ash Pond

Testing Equipment Used/Observed and Calibration/Re-Calibration Documentation

NA

Tests Completed/Observed

NA

Work Comments/Observations and Test Results

9:00 - The contractor cleaned up the perimeter roadways after the rain the day prior. The contractor decided the site conditions were not suitable for hauling activities and prepared to leave the site for the day.
10:00 - SCS staff collected field samples of general fill and topsoil for lab testing.
10:15 - The contractor left the site.
11:00 - SCS staff left the site.

Material(s) Delivered to Site

NA

Construction Observer

Chris Calhoun

SCS ENGINEERS

DAILY FIELD ACTIVITIES REPORT

Client Name:	Ames Municipal Electric System	**Date:**	June 19, 2025
SCS Engineers Project Name:	Ames Ash Pond Closure	**Start Time:**	8:30 AM
SCS Engineers Project No:	27219356.02	**Stop Time:**	5:00 PM
Project Location:	Ames Municipal Electric System Ash Ponds Ames, Iowa		

Task: *Topsoil Placement*

Weather Information

87°, Sunny, Winds from SW at 12 mph

Contractors, Personnel, and Equipment On Site

Contractors: JB Holland (JBH) Personnel: JBH - 3
Equipment: 1-John Deere 380G Excavator, 1-CAT D6 XE Dozer, 1-Bobcat T770 Compact Track Loader, 1-Volvo Dump Truck, 1-CAT CP56B Compactor, 1-CAT CS563E Smooth Drum Roller, 1-John Deere 755D Crawler Loader, 1-Fuel Truck, 1-4,000 Gal. Water Truck, 1-McElroy Tracstar Series 2 Fusion Machine

Work Areas/Boundaries

Existing Ash Pond

Testing Equipment Used/Observed and Calibration/Re-Calibration Documentation

NA

Tests Completed/Observed

NA

Work Comments/Observations and Test Results

8:30 - The contractor placed topsoil in the northeast corner of the closure area.
10:30 - The contractor placed topsoil on the east slope of the separation berm.
12:45 - SCS staff surveyed the top of the general fill placed on the eastern slope of the pond.
1:00 - The contractor continued placing topsoil in the northeast corner of the closure area.
3:00 - SCS staff surveyed the top of the general fill placed on the southern slope of the pond.
4:45 - The contractor used an excavator to remove large rocks and debris from the general fill placed on the pond sideslopes.
5:00 - SCS staff left the site.

Material(s) Delivered to Site

NA

Construction Observer

Chris Calhoun

SCS ENGINEERS

DAILY FIELD ACTIVITIES REPORT

Client Name:	Ames Municipal Electric System	**Date:**	June 23, 2025
SCS Engineers Project Name:	Ames Ash Pond Closure	**Start Time:**	9:00 AM
SCS Engineers Project No:	27219356.02	**Stop Time:**	5:00 PM
Project Location:	Ames Municipal Electric System Ash Ponds Ames, Iowa		

Task: *Closure Area Grading, Sediment Controls*

Weather Information

87°, Mostly Cloudy, Winds from SW at 17 mph

Contractors, Personnel, and Equipment On Site

Contractors: JB Holland (JBH) Personnel: JBH - 2
Equipment: 1-John Deere 380G Excavator, 1-CAT D6 XE Dozer, 1-Bobcat T770 Compact Track Loader, 1-Volvo Dump Truck, 1-CAT CP56B Compactor, 1-CAT CS563E Smooth Drum Roller, 1-John Deere 755D Crawler Loader, 1-Fuel Truck, 1-4,000 Gal. Water Truck, 1-McElroy Tracstar Series 2 Fusion Machine

Work Areas/Boundaries

Existing Ash Pond

Testing Equipment Used/Observed and Calibration/Re-Calibration Documentation

NA

Tests Completed/Observed

NA

Work Comments/Observations and Test Results

9:00 - The contractor worked on shaping and final grading of the closure area. This activity continued for a majority of the work day.
9:30 - The contractor used a skidloader to cleanup the perimeter roadways.
1:15 - SCS staff began surveying the top of the final cover in the closure area.
2:30 - The contractor placed straw wattles around the perimeter ditch outlets and area intake openings for sediment control.
4:30 - SCS staff continued surveying the top of the final cover in the closure area.
5:00 - Rain began to fall at the site. The contractor and SCS staff left the site.

Material(s) Delivered to Site

NA

Construction Observer

Chris Calhoun

SCS ENGINEERS

DAILY FIELD ACTIVITIES REPORT

Client Name:	Ames Municipal Electric System	**Date:**	June 24, 2025
SCS Engineers Project Name:	Ames Ash Pond Closure	**Start Time:**	8:45 AM
SCS Engineers Project No:	27219356.02	**Stop Time:**	12:00 PM
Project Location:	Ames Municipal Electric System Ash Ponds Ames, Iowa		

Task: *General Fill Placement*

Weather Information

72°, Cloudy with light rain showers, Winds from S at 5 mph

Contractors, Personnel, and Equipment On Site

Contractors: JB Holland (JBH) Personnel: JBH - 2
Equipment: 1-John Deere 380G Excavator, 1-CAT D6 XE Dozer, 1-Bobcat T770 Compact Track Loader, 1-Volvo Dump Truck, 1-CAT CP56B Compactor, 1-CAT CS563E Smooth Drum Roller, 1-John Deere 755D Crawler Loader, 1-Fuel Truck, 1-4,000 Gal. Water Truck, 1-McElroy Tracstar Series 2 Fusion Machine

Work Areas/Boundaries

Existing Ash Pond

Testing Equipment Used/Observed and Calibration/Re-Calibration Documentation

NA

Tests Completed/Observed

NA

Work Comments/Observations and Test Results

8:45 - The contractor placed general fill on the slope in the southwest corner of the pond, adjacent to the concrete pad and separation berm.
10:30 - SCS staff continued surveying the top of the final cover in the closure area.
11:00 - The contractor left the site.
12:00 - SCS staff left the site.

Material(s) Delivered to Site

NA

Construction Observer

Chris Calhoun

SCS ENGINEERS

DAILY FIELD ACTIVITIES REPORT

Client Name:	Ames Municipal Electric System	**Date:**	June 30, 2025
SCS Engineers Project Name:	Ames Ash Pond Closure	**Start Time:**	9:15 AM
SCS Engineers Project No:	27219356.02	**Stop Time:**	5:00 PM
Project Location:	Ames Municipal Electric System Ash Ponds Ames, Iowa		

Task: *Access Road Restoration, Contact Water Vault*

Weather Information

85°, Sunny, Winds from NW at 10 mph

Contractors, Personnel, and Equipment On Site

Contractors: JB Holland (JBH) Personnel: JBH - 3
Equipment: 1-John Deere 380G Excavator, 1-CAT D6 XE Dozer, 1-Bobcat T770 Compact Track Loader, 1-Volvo Dump Truck, 1-CAT CP56B Compactor, 1-CAT CS563E Smooth Drum Roller, 1-John Deere 755D Crawler Loader, 1-Fuel Truck, 1-4,000 Gal. Water Truck

Work Areas/Boundaries

Existing Ash Pond

Testing Equipment Used/Observed and Calibration/Re-Calibration Documentation

NA

Tests Completed/Observed

NA

Work Comments/Observations and Test Results

9:15 - The contractor placed geotextile and subgrade aggregate for restoration of the access road on the west side of the closure area.
9:30 - The contractor worked on installing metal grating and pipe supports in the contact water vault.
11:00 - The contractor placed geotextile and subgrade aggregate for the access road on the separation berm.
2:15 - The contractor compacted the subgrade aggregate for the access roads.
3:15 - The contractor began placing the gravel surface course for the west access road.
4:15 - The contractor began placing the gravel surface course for the separation berm access road.
5:00 - SCS staff left the site.

Material(s) Delivered to Site

Road subgrade aggregate, road surface course gravel

Construction Observer

Chris Calhoun

SCS ENGINEERS

DAILY FIELD ACTIVITIES REPORT

Client Name:	Ames Municipal Electric System	**Date:**	July 1, 2025
SCS Engineers Project Name:	Ames Ash Pond Closure	**Start Time:**	9:00 AM
SCS Engineers Project No:	27219356.02	**Stop Time:**	5:00 PM
Project Location:	Ames Municipal Electric System Ash Ponds Ames, Iowa		

Task: *Access Road Restoration, Contact Water Vault, Leachate Line Cleaning/Televising*

Weather Information

86°, Sunny, Winds from NW at 10-15 mph

Contractors, Personnel, and Equipment On Site

Contractors: JB Holland (JBH) Personnel: JBH - 3, Draintech - 2
Equipment: 1-John Deere 380G Excavator, 1-CAT D6 XE Dozer, 1-Bobcat T770 Compact Track Loader, 1-Volvo Dump Truck, 1-CAT CP56B Compactor, 1-CAT CS563E Smooth Drum Roller, 1-John Deere 755D Crawler Loader, 1-Fuel Truck, 1-4,000 Gal. Water Truck

Work Areas/Boundaries

Existing Ash Pond

Testing Equipment Used/Observed and Calibration/Re-Calibration Documentation

NA

Tests Completed/Observed

NA

Work Comments/Observations and Test Results

9:00 - The contractor started placing road gravel to restore the existing access road along the north side of the closure area. The contractor stopped as the extents of this work still required additional discussion.
9:00 - The contractor continued installing pipe supports on the inside of the contact water vault.
9:30 - Draintech arrived on-site to televise and clean the contact water collection lines.
10:00 - The contractor worked on final grading of the west access road and the separation berm access road.
2:00 - The contractor cleaned the silt from the diversion berm flowline and perimeter ditch.
5:00 - SCS staff left the site.

Material(s) Delivered to Site

Road gravel

Construction Observer

Chris Calhoun

SCS ENGINEERS

DAILY FIELD ACTIVITIES REPORT

Client Name:	Ames Municipal Electric System	**Date:**	July 2, 2025
SCS Engineers Project Name:	Ames Ash Pond Closure	**Start Time:**	8:30 AM
SCS Engineers Project No:	27219356.02	**Stop Time:**	5:30 PM
Project Location:	Ames Municipal Electric System Ash Ponds Ames, Iowa		

Task: *Vegetation Clearing, NE Overflow Grading, Perimeter Ditch Grading*

Weather Information

86°, Sunny, Winds from SW at 10-15 mph

Contractors, Personnel, and Equipment On Site

Contractors: JB Holland (JBH) Personnel: JBH - 1
Equipment: 1-CAT D6 XE Dozer, 1-Bobcat T770 Compact Track Loader, 1-CAT CP56B Compactor, 1-CAT CS563E Smooth Drum Roller, 1-John Deere 755D Crawler Loader, 1-Fuel Truck, 1-4,000 Gal. Water Truck

Work Areas/Boundaries

Existing Ash Pond

Testing Equipment Used/Observed and Calibration/Re-Calibration Documentation

NA

Tests Completed/Observed

NA

Work Comments/Observations and Test Results

8:30 - SCS staff surveyed the diversion berm and toe of the east closure slope.
10:30 - The contractor used a skidloader equipped with a Brush Cutter attachment to clear vegetation along the north property boundary.
11:45 - The contractor used a reciprocating saw to cut down several trees along the north fenceline.
1:00 - The contractor cut back the two 24" stormwater pipe outlets to make the pipe flowlines flush with the top of the erosion stone.
2:30 - The contractor worked on final grading of the perimeter ditch.
3:30 - SCS staff surveyed the perimeter ditch and the general fill placement for the south access road restoration.
4:45 - The contractor graded the stormwater overflow on the north side of the separation berm. Once the grading was completed, the contractor placed geotextile and rock for the access road.
5:30 - SCS staff left the site.

Material(s) Delivered to Site

NA

Construction Observer

Chris Calhoun

SCS ENGINEERS

DAILY FIELD ACTIVITIES REPORT

Client Name:	Ames Municipal Electric System	**Date:**	July 23, 2025
SCS Engineers Project Name:	Ames Ash Pond Closure	**Start Time:**	1:00 PM
SCS Engineers Project No:	27219356.02	**Stop Time:**	3:30 PM
Project Location:	Ames Municipal Electric System Ash Ponds Ames, Iowa		

Task: *Electrical Installation, Erosion & Sediment Control*

Weather Information

91°, Sunny, Winds from SSW at 15-20 mph

Contractors, Personnel, and Equipment On Site

Contractors: JB Holland (JBH), Absolute Group (AG), Personnel: JBH - 1, AG - 3
Equipment: 1-CAT D6N LGP Dozer, 1-Bobcat T770 Compact Track Loader, 1- Ingersoll Rand SD-45 Smooth Drum Compactor

Work Areas/Boundaries

Existing Ash Pond

Testing Equipment Used/Observed and Calibration/Re-Calibration Documentation

NA

Tests Completed/Observed

NA

Work Comments/Observations and Test Results

1:00 - City of Ames staff worked on installing the electrical service for the contact water vault.
1:00 - JB Holland used a dozer to rework the closure area and clean up sediment from the perimeter ditch and diversion berm flowlines
1:15 - Absolute Group installed filter sock around stormwater inlets and in the perimeter ditch/diversion berm flowlines for erosion and sediment control.
3:30 - JB Holland and SCS staff left the site.

Material(s) Delivered to Site

NA

Construction Observer

Chris Calhoun

SCS ENGINEERS

DAILY FIELD ACTIVITIES REPORT

Client Name:	Ames Municipal Electric System	**Date:**	August 1, 2025
SCS Engineers Project Name:	Ames Ash Pond Closure	**Start Time:**	12:30 AM
SCS Engineers Project No:	27219356.02	**Stop Time:**	3:00 PM
Project Location:	Ames Municipal Electric System Ash Ponds Ames, Iowa		

Task: *Erosion & Sediment Repair and Cleanup*

Weather Information

74°, Sunny, Winds from E at 10-15 mph

Contractors, Personnel, and Equipment On Site

Contractors: JB Holland (JBH) Personnel: JBH - 1
Equipment: 1-CAT D6N LGP Dozer, 1-Bobcat T770 Compact Track Loader, 1- Ingersoll Rand SD-45 Smooth Drum Compactor

Work Areas/Boundaries

Existing Ash Pond

Testing Equipment Used/Observed and Calibration/Re-Calibration Documentation

NA

Tests Completed/Observed

NA

Work Comments/Observations and Test Results

12:30 - JB Holland used a dozer to rework the closure area and clean up sediment from the perimeter ditch and diversion berm flowlines.
3:00 - The contractor and SCS staff left the site. Additional clean-up of the closure area to occur on Monday after the site has additional time to dry out.

Material(s) Delivered to Site

NA

Construction Observer

Chris Calhoun

SCS ENGINEERS

DAILY FIELD ACTIVITIES REPORT

Client Name:	Ames Municipal Electric System	**Date:**	August 4, 2025
SCS Engineers Project Name:	Ames Ash Pond Closure	**Start Time:**	10:00 AM
SCS Engineers Project No:	27219356.02	**Stop Time:**	1:20 PM
Project Location:	Ames Municipal Electric System Ash Ponds Ames, Iowa		

Task: *Erosion & Sediment Repair and Cleanup*

Weather Information

75°, Partly Cloudy, Winds from SE at 5-10 mph

Contractors, Personnel, and Equipment On Site

Contractors: JB Holland (JBH) Personnel: JBH - 1
Equipment: 1-CAT D6N LGP Dozer, 1-Bobcat T770 Compact Track Loader, 1- Ingersoll Rand SD-45 Smooth Drum Compactor

Work Areas/Boundaries

Existing Ash Pond

Testing Equipment Used/Observed and Calibration/Re-Calibration Documentation

NA

Tests Completed/Observed

NA

Work Comments/Observations and Test Results

10:00 - JB Holland used a dozer to rework the closure area sideslopes, perimeter ditch, and diversion berm flowline.
10:00 - Midwest Fence & Gate worked on repairing the fencepost at the northwest site access.
11:00 - JB Holland re-worked the east separation berm sideslope.
11:30 - SCS staff surveyed the east separation berm sideslope.
12:00 - SCS staff performed spot-checks of the closure area final cover thickness.
12:30 - JB Holland left the site.
1:20 - SCS staff left the site.

Material(s) Delivered to Site

NA

Construction Observer

Chris Calhoun

SCS ENGINEERS

DAILY FIELD ACTIVITIES REPORT

Client Name:	Ames Municipal Electric System	**Date:**	August 6, 2025
SCS Engineers Project Name:	Ames Ash Pond Closure	**Start Time:**	9:00 AM
SCS Engineers Project No:	27219356.02	**Stop Time:**	12:30 PM
Project Location:	Ames Municipal Electric System Ash Ponds Ames, Iowa		

Task: *Seeding Contractor Mobilization*

Weather Information

68°, Light rain throughout the morning, Winds from SE at 5-10 mph

Contractors, Personnel, and Equipment On Site

Contractors: Absolute Group (AG), Personnel: AG - 4
Equipment: 1-CAT D6N LGP Dozer, 1-Bobcat T770 Compact Track Loader, 1- Ingersoll Rand SD-45 Smooth Drum Compactor

Work Areas/Boundaries

Existing Ash Pond

Testing Equipment Used/Observed and Calibration/Re-Calibration Documentation

NA

Tests Completed/Observed

NA

Work Comments/Observations and Test Results

9:00 - SCS staff arrived on-site. Rain was falling at the site.
9:20 - Absolute Group arrived on-site with equipent and material for seeding and vegetative restoration. The contractor determined site conditions were too wet for work to occur.
11:00 - SCS staff surveyed the elevation of the north access road and the constructed north stormwater overflow.
12:00 - SCS staff walked the perimeter of the closure area to assess if any erosion or sedimentation had occured from the morning rain.
12:30 - SCS staff left the site.

Material(s) Delivered to Site

Erosion Mat

Construction Observer

Chris Calhoun

SCS ENGINEERS

DAILY FIELD ACTIVITIES REPORT

Client Name:	Ames Municipal Electric System	**Date:**	August 7, 2025
SCS Engineers Project Name:	Ames Ash Pond Closure	**Start Time:**	10:45 AM
SCS Engineers Project No:	27219356.02	**Stop Time:**	6:15 PM
Project Location:	Ames Municipal Electric System Ash Ponds Ames, Iowa		

Task: *South Access Road Construction*

Weather Information

85°, Partly Cloudy, Winds from S at 10-15 mph

Contractors, Personnel, and Equipment On Site

Contractors: JB Holland (JBH), Personnel: JBH - 1
Equipment: 1-CAT D6N LGP Dozer, 1-Bobcat T770 Compact Track Loader, 1- Ingersoll Rand SD-45 Smooth Drum Compactor

Work Areas/Boundaries

Existing Ash Pond

Testing Equipment Used/Observed and Calibration/Re-Calibration Documentation

NA

Tests Completed/Observed

NA

Work Comments/Observations and Test Results

10:45 - SCS staff arrived on-site.
12:00 - JB Holland arrived on-site.
12:20 - JB Holland used a dozer to prepare the south access road for placement of geotextile and road aggregate.
1:00 - JB Holland began placing the geotextile and subgrade aggregate.
3:00 - JB Holland began placing the gravel surface course.
5:45 - JB Holland compacted the road aggregate with a smooth drum compactor.
6:15 - SCS staff left the site.

Material(s) Delivered to Site

Road Aggregate

Construction Observer

Chris Calhoun

SCS ENGINEERS

DAILY FIELD ACTIVITIES REPORT

Client Name:	Ames Municipal Electric System	**Date:**	August 8, 2025
SCS Engineers Project Name:	Ames Ash Pond Closure	**Start Time:**	9:00 AM
SCS Engineers Project No:	27219356.02	**Stop Time:**	4:30 PM
Project Location:	Ames Municipal Electric System Ash Ponds Ames, Iowa		

Task: *Vegetative Restoration*

Weather Information

88°, Sunny, Winds from SE at 10-15 mph

Contractors, Personnel, and Equipment On Site

Contractors: Absolute Group (AG), Personnel: AG - 8
Equipment: 1-CAT D6N LGP Dozer, 1-Bobcat T770 Compact Track Loader, 1- Ingersoll Rand SD-45 Smooth Drum Compactor

Work Areas/Boundaries

Existing Ash Pond

Testing Equipment Used/Observed and Calibration/Re-Calibration Documentation

NA

Tests Completed/Observed

NA

Work Comments/Observations and Test Results

9:00 - Absolute Group tilled the topsoil in the closure area to prepare for seeding.
9:30 - Absolute Group applied seed to the closure area and perimeter ditch.
10:15 - Absolute Group began placing channel erosion mat in the perimeter ditch around the closure area. The erosion mat was secured with staples.
1:30 - Absolute Group began placing non-channel erosion mat on the closure area slopes.
1:30 - Absolute Group tilled the east pond sideslopes and exterior sideslopes that had been cleared and grubbed to prepare for placement of straw mulch and seeding.
4:00 - Absolute Group seeded the east pond sideslopes and exterior sideslopes.
4:30 - SCS staff left the site.

Material(s) Delivered to Site

NA

Construction Observer

Chris Calhoun

SCS ENGINEERS

DAILY FIELD ACTIVITIES REPORT

Client Name:	Ames Municipal Electric System	**Date:**	August 14, 2025
SCS Engineers Project Name:	Ames Ash Pond Closure	**Start Time:**	3:45 PM
SCS Engineers Project No:	27219356.02	**Stop Time:**	7:30 PM
Project Location:	Ames Municipal Electric System Ash Ponds Ames, Iowa		

Task: *Vegetative Restoration Documentation*

Weather Information

82°, Sunny, Winds from SE at 10-15 mph

Contractors, Personnel, and Equipment On Site

Contractors: NA
Equipment: 1-CAT D6N LGP Dozer, 1-Bobcat T770 Compact Track Loader, 1- Ingersoll Rand SD-45 Smooth Drum Compactor

Work Areas/Boundaries

Existing Ash Pond

Testing Equipment Used/Observed and Calibration/Re-Calibration Documentation

NA

Tests Completed/Observed

NA

Work Comments/Observations and Test Results

3:45 - SCS staff arrived on-site to survey and document the installed erosion mat, straw mulch, and seeded areas.
7:30 - SCS staff left the site.

Material(s) Delivered to Site

NA

Construction Observer

Chris Calhoun

SCS ENGINEERS

DAILY FIELD ACTIVITIES REPORT

Client Name:	Ames Municipal Electric System	**Date:**	August 28, 2025
SCS Engineers Project Name:	Ames Ash Pond Closure	**Start Time:**	1:00 PM
SCS Engineers Project No:	27219356.02	**Stop Time:**	3:00 PM
Project Location:	Ames Municipal Electric System Ash Ponds Ames, Iowa		

Task: *Contact Water Pump Startup, Site Walkover*

Weather Information

80°, Sunny, Winds from SW at 0-5 mph

Contractors, Personnel, and Equipment On Site

Contractors: JB Holland (JBH), Voltmer Personnel: JBH-2, Voltmer-1
Equipment: None

Work Areas/Boundaries

Existing Ash Pond

Testing Equipment Used/Observed and Calibration/Re-Calibration Documentation

NA

Tests Completed/Observed

NA

Work Comments/Observations and Test Results

1:00 - JBH and Voltmer performed startup of the contact water pump and control system to test for functionality. Other accessories within the vault were also tested for functionality. City of Ames staff was also present for system startup.
1:45 - JBH, SCS, and City of Ames staff performed a site walkover to determine remaining punch list items.
3:00 - SCS staff left the site.

Material(s) Delivered to Site

NA

Construction Observer

Chris Calhoun

SCS ENGINEERS

Appendix D

Updated Slope Stability Model

City of Ames
Ash Pond Closure
SCS Engineers Project #27219356.02

April 17, 2024
Project No. 27219356.02
City of Ames – Ash Pond Closure

MEMORANDUM

Prepared By: Matt Kuhlenengel

Reviewed By: John Hartwell

SUBJECT: REQUIRED INTERFACE FRICTION ANGLE REDUCTION

Background

As part of the design process for the City of Ames Ash Pond Closure, a slope stability analysis was performed for the proposed Closure Area, consisting of 2:1 perimeter side slope transitioning to 4:1 slopes, and a 20:1 sloped crown. To perform this analysis, friction angles and cohesion values considered to be typical geosynthetic values (Koerner and Narejo, 2005)[1] were used. See the initial construction application for a detailed slope stability analysis report.

During material procurement, the contractor stated the geosynthetic manufacturers were not confident that the materials they produced would achieve the required values. Given the high factor of safety in the initial analysis (>2.0), a request was made to lower the friction angle requirements stated in the CQA Plan.

Updated Slope Stability Analysis

A subsequent analysis was performed, reducing the friction angle to 21 degrees with no cohesion. This analysis resulted in a factor of safety of 1.9.

[1] Koerner, G.R., and Narejo, D., "Direct Sear Database of Geosynthetic-to Geosynthetic and Geosynthetic to Soil-Interfaces, Geosynthetic Research Institute, 475 Kedron Ave., Folsom, PA, GRI Report #30, Table 1.

Title: Title: Ames CCR Closure North South, Created By: Hartwell, J.F., Date: 04/17/2024
File Name: Ames CCR Closure North South v0.4rev1 jfh.gsz, Last Solved Date: 04/17/2024
Name: NS PC LtR cover forced toe (Std GDL / DST LLDPE FML)), Method: Morgenstern-Price,
Direction of movement: Left to Right

FOS: 1.9

Volume: 287.3605 ft³, Weight: 37,471.809 lbf
Resisting Moment: 2,296,101.7 lbf·ft, Activating Moment: 1,205,715.1 lbf·ft
Resisting Force: 15,280.45 lbf, Activating Force: 8,061.3637 lbf

Color	Name	Slope Stability Material Model	Unit Weight (pcf)	Effective Cohesion (psf)	Phi 1 (°)	Phi 2 (°)	Bilinear Normal (psf)	Effective Friction Angle (°)	Piezometric Surface
	CCR Material	Mohr-Coulomb	86.4	540				36	1
	Compacted Embankment (CL)	Mohr-Coulomb	131.1	1,600				26	2
	Existing Recompacted Clay Liner(RCL) (CH)	Mohr-Coulomb	121.6	120				14	1
	FML (Std GDL/FML DST LLDPE)	Mohr-Coulomb	130.4	0				21	1
	Foundation Soil (CL)	Mohr-Coulomb	121.6	1,440				14	
	Foundation Soil (ML-CL/SP)	Bilinear	130	0	36	30	3,083		
	Grading Layer (ML-CL)	Mohr-Coulomb	130.4	960				30	
	Impenetrable	Bedrock (Impenetrable)							
	Vegetative Layer (ML-CL)	Mohr-Coulomb	130.4	460				30	2

1.9

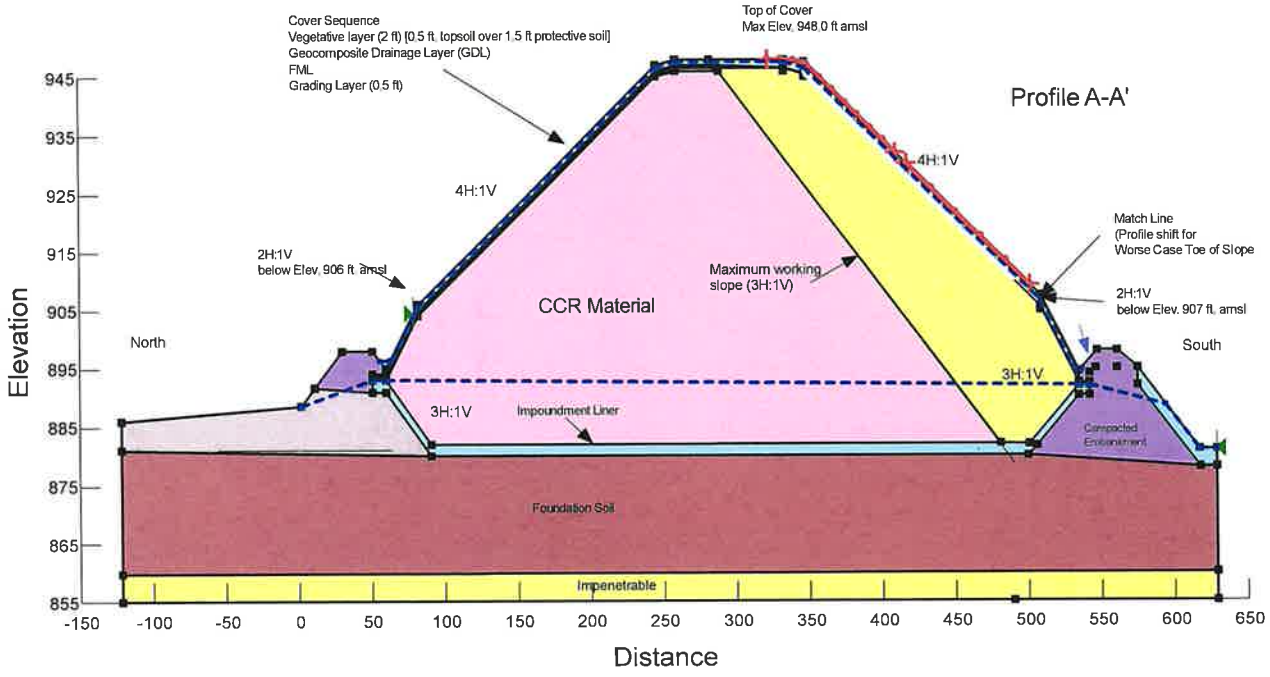

0.0000	1.90
0.0100	1.82
0.0200	1.75
0.0300	1.69
0.0400	1.59
0.0500	1.56
0.0600	1.53
0.0700	1.52
0.0800	1.38
0.0900	1.34
0.1000	1.33
0.1100	1.25
0.1200	1.23
0.1300	1.23
0.1400	1.14
0.1500	1.12
0.1600	1.09
0.1700	1.10
0.1800	1.03
0.1900	1.00
0.0000	0.97
0.2100	0.95
0.2200	0.94
0.2300	0.90
0.2400	0.88
0.2500	0.87
0.2600	0.95
0.2700	0.84
0.2800	0.82
0.2900	0.80
0.3000	0.79
0.3100	0.76
0.3200	0.74
0.3300	0.73
0.3400	0.72
0.3500	0.76
0.3600	0.73
0.3700	0.72
0.3800	0.71
0.3900	0.70
0.4000	0.68

COVER CHECK 4H:1V

$A_y = 0.19g$

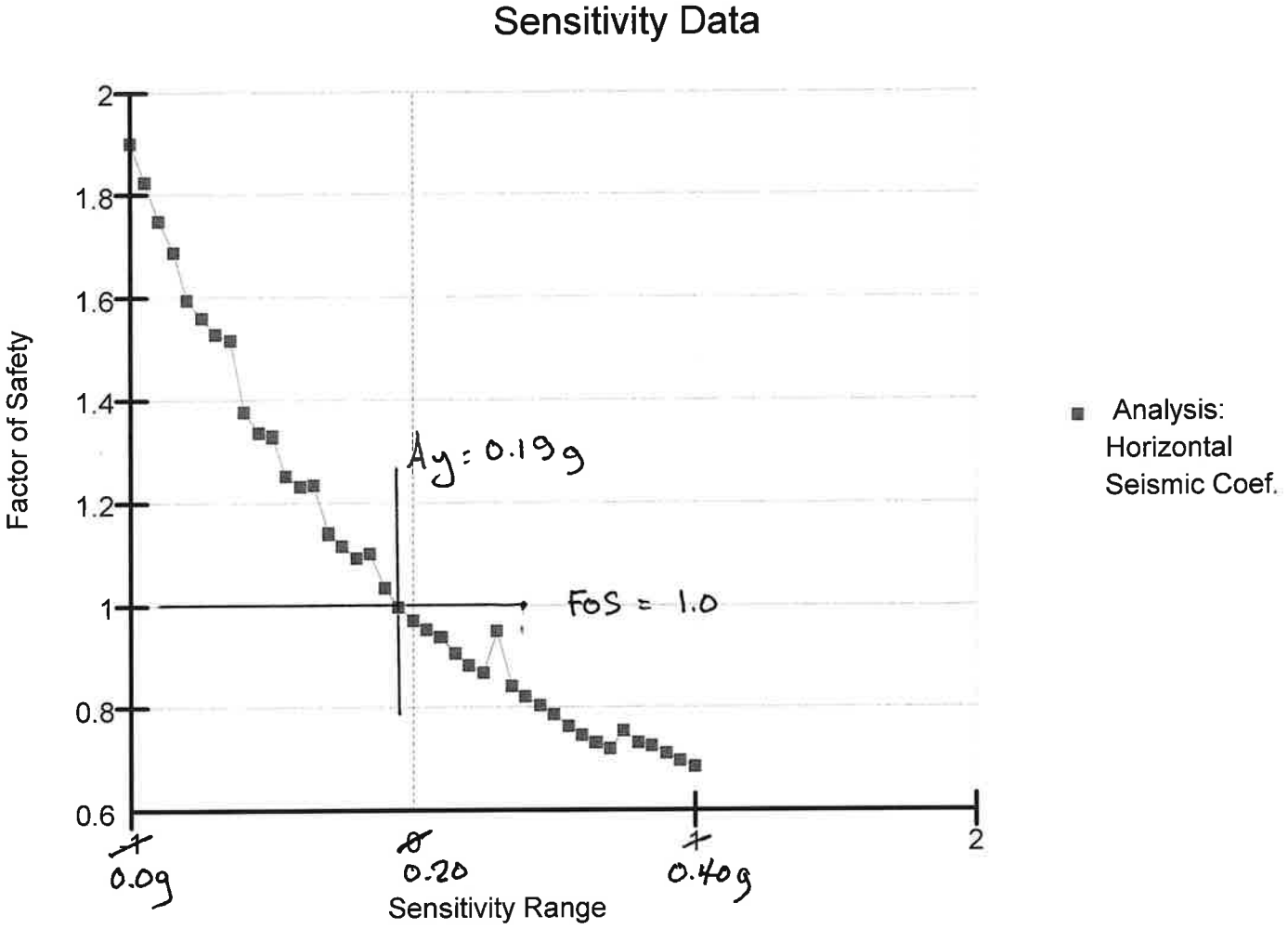
Sensitivity Data
Factor of Safety
2
1.8
1.6
1.4
1.2
1
0.8
0.6
Ay = 0.19g
FoS = 1.0
0.09
0.20
0.40g
2
Sensitivity Range
Analysis: Horizontal Seismic Coef.

Title: Title, Ames CCR Closure North South, Created By: Hartwell, J.F., Date: 04/17/2024
File Name: Ames CCR Closure North South v0.4rev1 jfh gsz, Last Solved Date: 04/17/2024
Name: NS PC LIR toe (BS) (Std GDL / DST LLDPE FML), Method: Morgenstern-Price,
Direction of movement: Left to Right

FOS: 1.9

Volume: 47.674757 ft³, Weight: 6,216.7883 lbf
Resisting Moment: 68,947.641 lbf·ft, Activating Moment: 35,643.776 lbf·ft
Resisting Force: 3,907.9203 lbf, Activating Force: 2,025.1394 lbf

Color	Name	Slope Stability Material Model	Unit Weight (pcf)	Effective Cohesion (psf)	Phi 1 (°)	Phi 2 (°)	Bilinear Normal (psf)	Effective Friction Angle (°)	Piezometric Surface
	CCR Material	Mohr-Coulomb	86.4	540				36	1
	Compacted Embankment (CL)	Mohr-Coulomb	131.1	1,600				26	2
	Existing Recompacted Clay Liner(RCL) (CH)	Mohr-Coulomb	121.6	120				14	1
	FML (Std GDL/FML DST LLDPE)	Mohr-Coulomb	130.4	0				21	1
	Foundation Soil (CL)	Mohr-Coulomb	121.6	1,440				14	
	Foundation Soil (ML-CL/SP)	Bilinear	130	0	36	30	3,083		
	Grading Layer (ML-CL)	Mohr-Coulomb	130.4	960				30	
	Impenetrable	Bedrock (Impenetrable)							
	Vegetative Layer (ML-CL)	Mohr-Coulomb	130.4	460				30	2

1.9

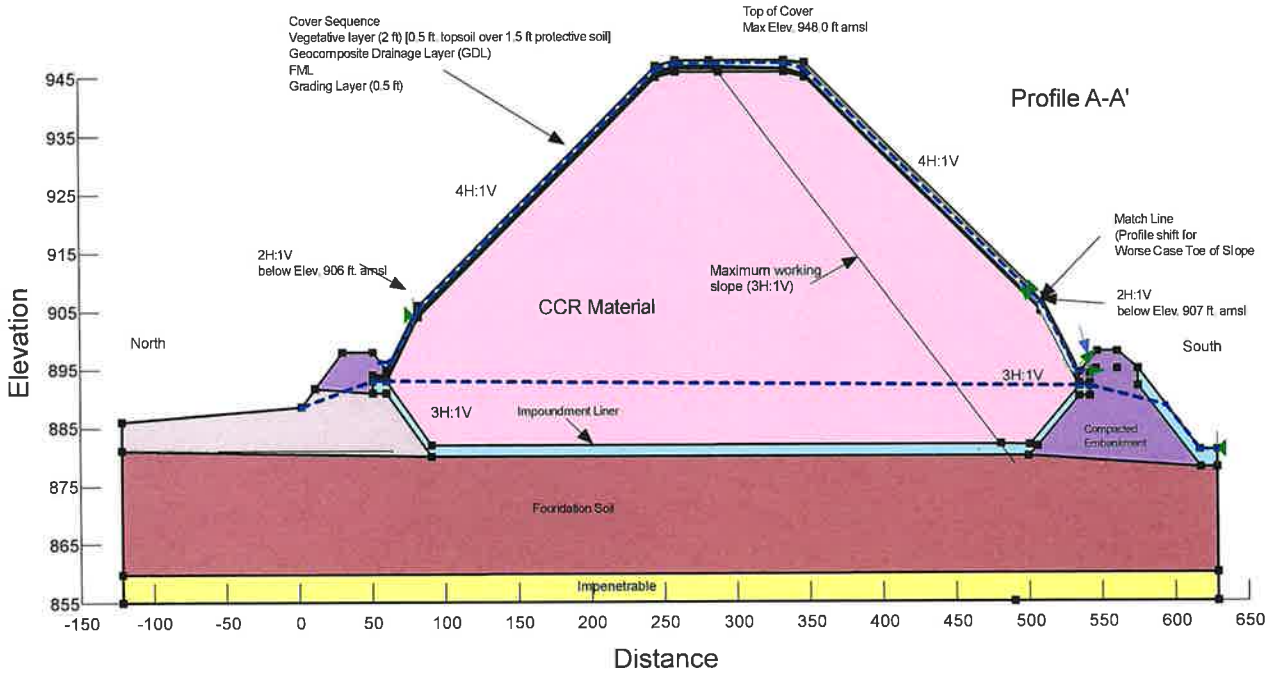

0.0000	1.93
0.0100	1.89
0.0200	1.84
0.0300	1.79
0.0400	1.74
0.0500	1.71
0.0600	1.66
0.0700	1.63
0.0800	1.59
0.0900	1.57
0.1000	1.54
0.1100	1.51
0.1200	1.46
0.1300	1.44
0.1400	1.41
0.1500	1.36
0.1600	1.34
0.1700	1.33
0.1800	1.30
0.1900	0.99
0.0000	1.25
0.2100	1.24
0.2200	0.99
0.2300	1.20
0.2400	1.18
0.2500	1.16
0.2600	1.14
0.2700	0.99
0.2800	0.99
0.2900	0.99
0.3000	1.06
0.3100	1.04
0.3200	1.00
0.3300	0.97
0.3400	0.99
0.3500	0.97
0.3600	0.96
0.3700	0.93
0.3800	0.93
0.3900	0.91
0.4000	0.90

COVER CHECK 2H:1V

$A_y = 0.18g$

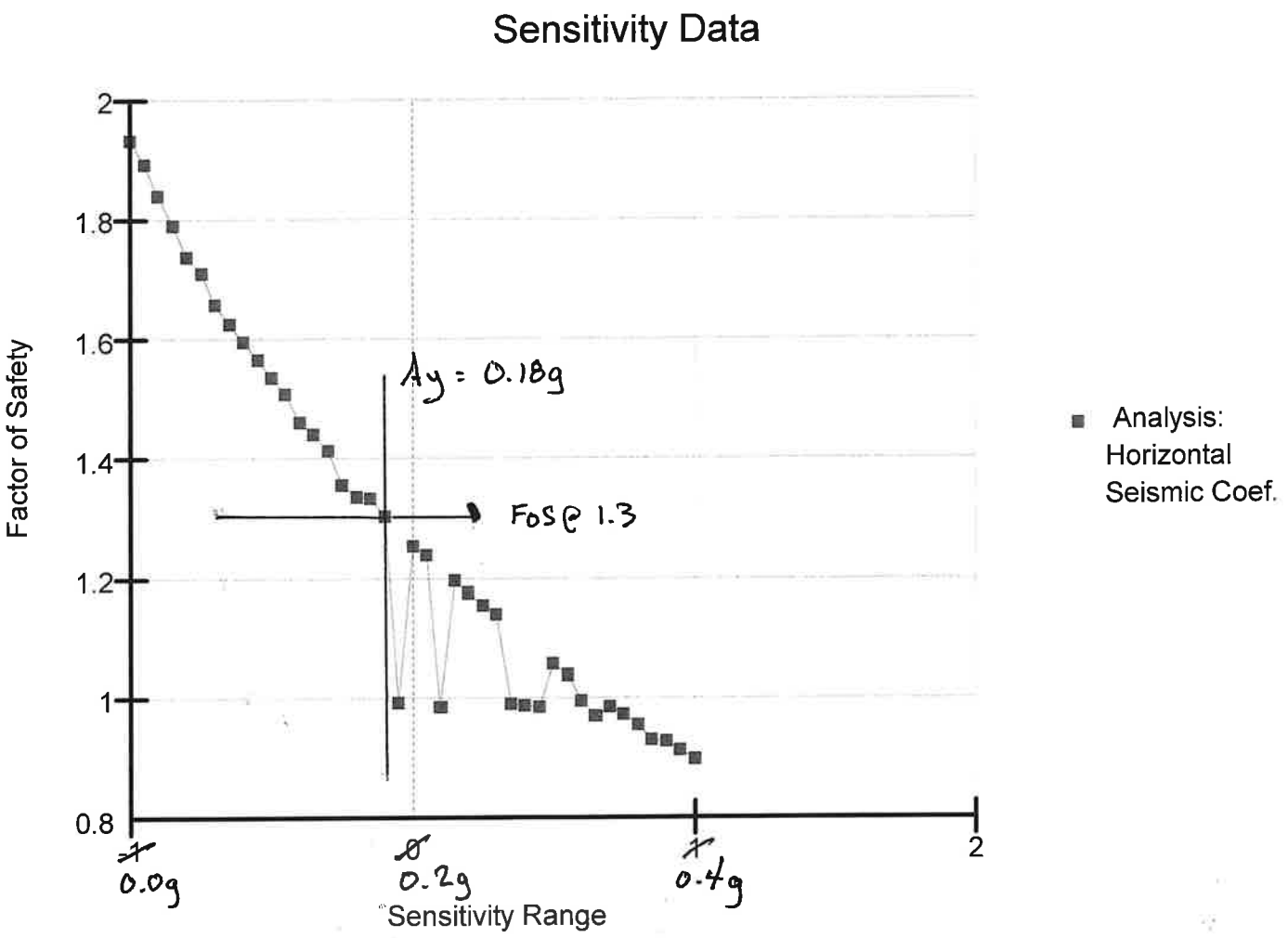
Sensitivity Data
Factor of Safety
2
1.8
1.6
1.4
1.2
1
0.8
Ay = 0.18g
FoS @ 1.3
0.0g
0.2g
0.4g
2
Sensitivity Range
Analysis: Horizontal Seismic Coef.

Appendix E

General Fill, Separation Berm Clay Fill, and Clay Liner Laboratory Test Results

E.1 – Clay Fill and General Fill Source Test Results

Project: City of Ames Ash Pond Closure
SCS Project #: 27219356.02

Section: 33 22 00
Title: Submittal #S15A – Soils

Submittal Review

- [ ] Conforms as submitted
- [X] Conforms as noted – Resubmittal is:
  - [ ] Not required
  - [ ] Required
  - [X] Noted portions only
  - [ ] For record only
- [ ] Does not conform
- [ ] Not required by contract documents
- [ ] For information only

Corrections or comments made on submittals during this review do not relieve the contractor from compliance with requirements of the drawings and specifications. This check is only for review of general conformance with the design concept of the project and general compliance with the information given in the contract documents. The contractor is responsible for; confirming and correlating all quantities and dimensions; selecting fabrication processes and techniques of construction; coordinating contractor's work with that of all other trades; and performing contractor's work in a safe and satisfactory manner.

Comments:
The submitted samples conform to the various soil applications according to the Table below. It is understood that the **Sample 1** will be resubmitted according to the attached email. **Sample 2** was rejected for use in the grading layer, due to the concrete pieces that were observed in the onsite stockpile.

		Soil Source		
		Sample 1 Elder Borrow, -3' to -6'	**Sample 2** West Stockpile	**Sample 3** Elder Borrow, -10'
Soil Application	Clay Liner	REJECTED	REJECTED	CONFORMS
	Clay Fill	REJECTED	REJECTED	CONFORMS
	General Fill	CONFORMS	CONFORMS	CONFORMS
	Grading Layer	CONFORMS	REJECTED	CONFORMS
	Cover Protective Soil	CONFORMS	CONFORMS	CONFORMS

Reviewed By: Matt Kuhlenengel	Date: 7/1/2024
SCS QC Review By: Deb Nelson	Date: 7/1/2024

G:\Project\27219356.02\Data and Calculations\Submittals\S15 - Soils\SCS Review S15A-Soils_240701.docx

Kuhlenengel, Matthew

From: Kuhlenengel, Matthew
Sent: Thursday, June 27, 2024 9:20 AM
To: Bill Holland; Joe Holland
Cc: Evans, Kristin; Feucht, Sam; Sturzl, Marty; Huber, Mark; Calhoun, Christopher
Subject: Borrow Material Re-Sample/Re-Test

Bill,

The initial sample from the Elder Borrow source landed just outside the classification that is required for the Clay Fill or Clay Liner (50% passing the #200 sieve is required, this sample had 48.3% passing). Per your request, re-sampling and re-testing of the material will be permissible given the following conditions:

- Chris accompanies you to collect three additional samples from the source.
- Chris will observe the uniformity of the source. Based on our conversation, since it is native soil that is being excavated it should be relatively monolithic (with the exception of potential sand seams that would need to be excluded).
- The testing for all three samples will be a sieve test (no hydrometer) and Atterberg limits testing.

Just coordinate with Chris and Joe to make sure that critical elements (requiring survey, observation, etc.) are not happening onsite during the time that Chris will be offsite at the borrow source.

Thanks,

Matt Kuhlenengel, E.I.
Staff Engineer
SCS ENGINEERS
Omaha, NE
402-689-4586 (Cell)
mkuhlenengel@scsengineers.com

Driven by Client Success
www.scsengineers.com

SHOP DRAWING TRANSMITTAL

DATE: 6/19/2024

Project: Ames Ash Pond Closure & RDF Ash Pond Construction

Specification Section Number: 33 22 00 Earth work

Transmittal Number: 15a

1st Submittal _____ or Resubmital __X_____

Contract Item	Description of Material	Manufacturer	Drawing or Data No.	Action Taken
16a,35,39,42	Soils - proctors			
	Soils - Sieve analysis			
	Soils - Perms			

As stated in the Contract Documents, the undersigned CONTRACTOR's submission of these Shop Drawings or samples shall constitute a representative to the OWNER and the ENGINEER that the CONTRACTOR has either determined and verified all quantities, dimensions, field construction criteria, materials, catalogue numbers and similar data or he assumes full responsibility for doing so, and that he has reviewed and coordinated each Shop Drawing or sample with the requirements of the work and the Contract Documents and he represents to the OWNER and the ENGINEER that item(s) described by these Shop Drawings do comply with the requirements of the Contract Documents. The undersigned Contractor certifies that the equipment included in this submittal complies with the latest requirements of the Occupational Health and Safety Act of 1970 including any standards or regulations established by the U.S. Secretary of Labor in administration of said act, and the Iowa Occupational Safety and Health Statutes.

6/19/2024

Supplier/Subcontractor:
JB Holland

(Autorized Signature of Contractor) **(Date)**

JB Holland Construction, Inc.

2191 State Hwy 52, Decorah, IA 52101

FOR ENGINEER'S USE

n as designated above in accordance with the following legend:

A- No Exception Taken
B- Make Corrections Noted & Resubmit
C- Revise & Resubmit
D- Rejected
E- Submit Specified Item

BY: _____

DATE: _____

MOISTURE - DENSITY RELATIONSHIP REPORT

(Proctor Test)

ASTM D 698-12 Method A Standard

PROJECT: **Ames Pond Closure and Construction Borrow Testing**
Ames, IA

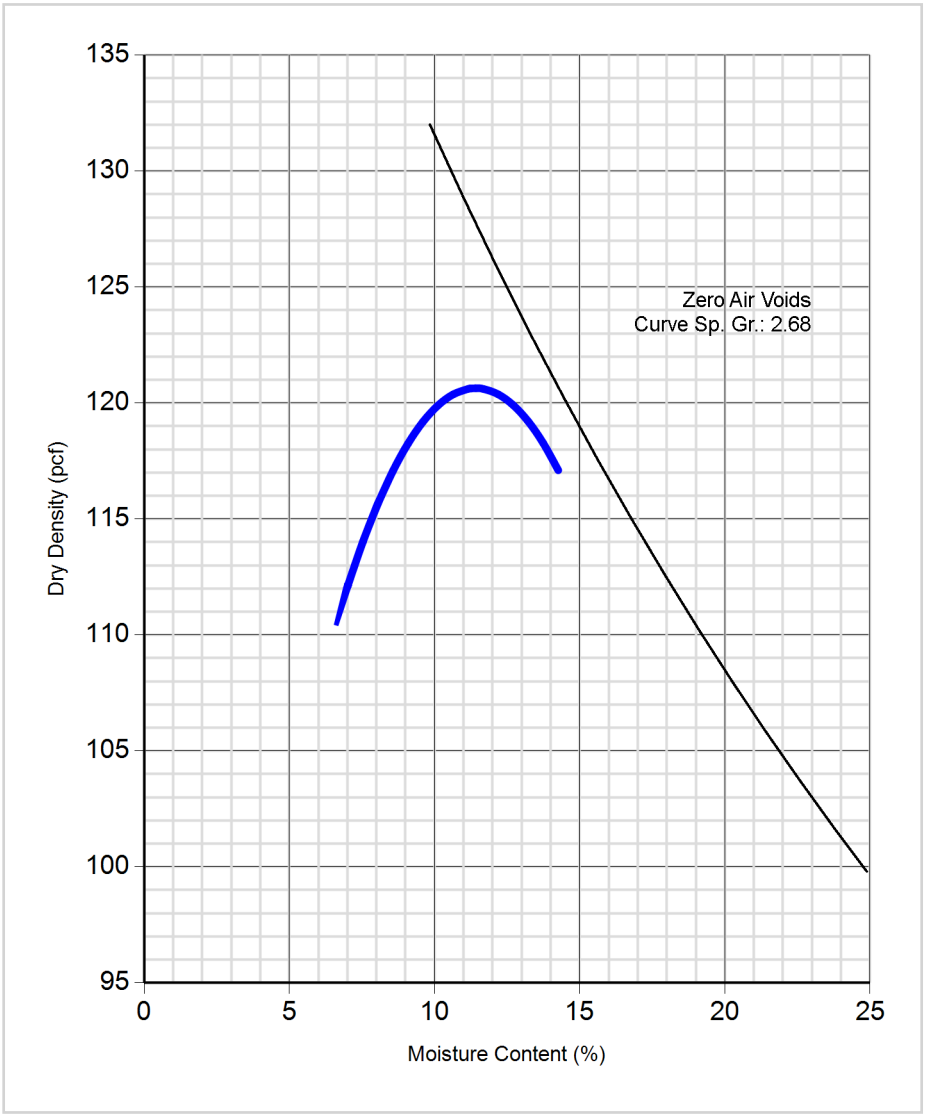

PROJECT NO: 2-9628

REPORT NO: 1-0

PROCTOR ID:	1

DATE RECEIVED: 06/03/2024

DATE TESTED: 06/06/2024

TESTED BY: NG

TEST RESULTS

MAXIMUM DRY DENSITY (pcf)
120.6

OPTIMUM MOISTURE (%)
11.4

Prep Method:: dry

Rammer Type: Manual

Proctor points available upon request.

McCay is property owner

SOURCE: Elder borrow 240th ST

SAMPLE DESCRIPTION: Sandy Lean CLAY brown trace gravel

Notes/Remarks:
-3 ft to -6 ft

taken from pile of soil from roughly 3' down to 6' down. Side of bank seemed uniform

APPROVED: *Jeff Roberts*

*Proctor reports shall not be reproduced, except in full, without our written permission.

TEAM Services, Inc.
717 S.E. 6th Street
Des Moines, IA 50309
515-282-8818
515-282-8741
www.teamservices.com
staff@teamservices.com

MOISTURE - DENSITY RELATIONSHIP REPORT

(Proctor Test)

ASTM D 698-12 Method A Standard

PROJECT: **Ames Pond Closure and Construction Borrow Testing**
Ames, IA

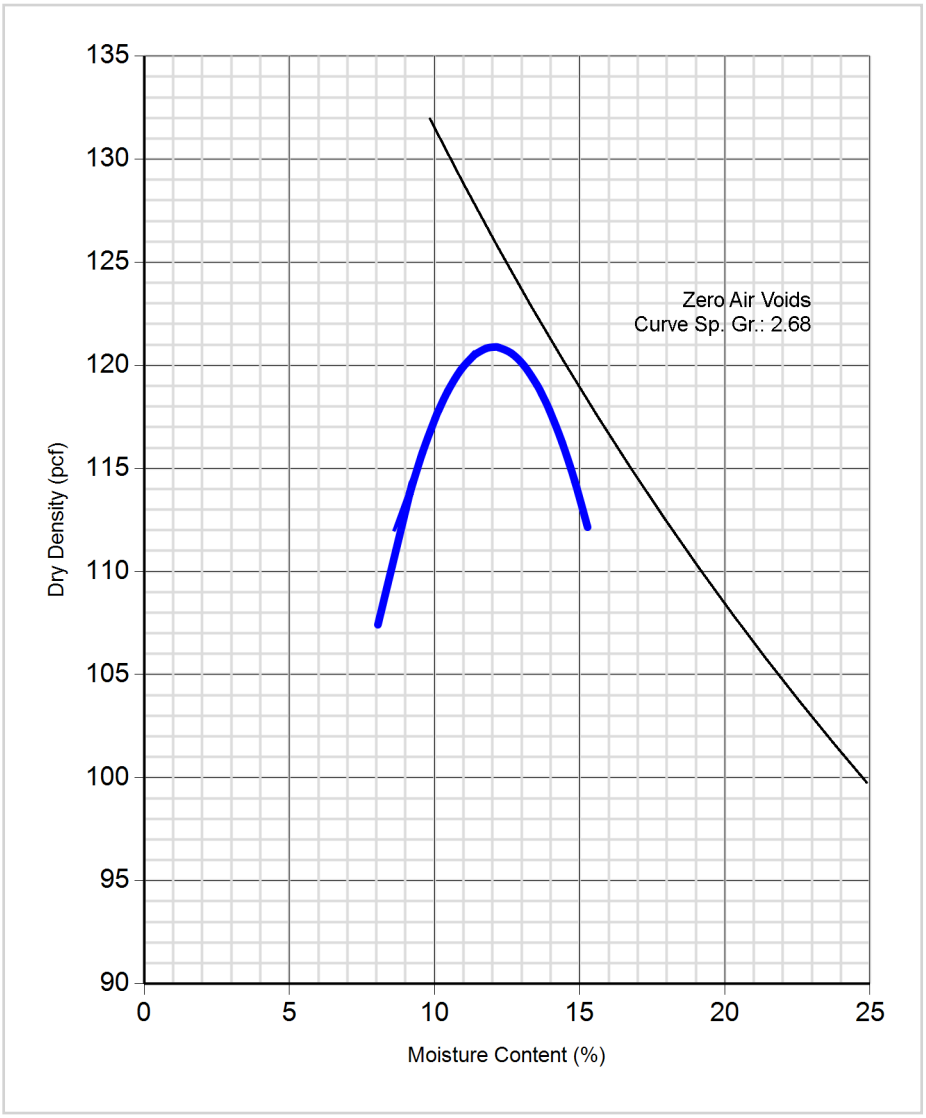

PROJECT NO: 2-9628

REPORT NO: 1-0

PROCTOR ID:	**2**

DATE RECEIVED: 06/03/2024

DATE TESTED: 06/06/2024

TESTED BY: NG

TEST RESULTS

MAXIMUM DRY DENSITY (pcf)
120.9

OPTIMUM MOISTURE (%)
12.0

Prep Method:: dry

Rammer Type: Manual

Proctor points available upon request.

SOURCE: West Stockpile

SAMPLE DESCRIPTION:	Sandy Lean CLAY, dark brown trace gravel

Notes/Remarks:

Material from Ash Pond on site stockpiles

APPROVED: *Jeff Roberts*

*Proctor reports shall not be reproduced, except in full, without our written permission.

TEAM Services, Inc.
717 S.E. 6th Street
Des Moines, IA 50309
515-282-8818
515-282-8741
www.teamservices.com
staff@teamservices.com

MOISTURE - DENSITY RELATIONSHIP REPORT

(Proctor Test)

ASTM D 698-12 Method A Standard

PROJECT: **Ames Pond Closure and Construction Borrow Testing**
Ames, IA

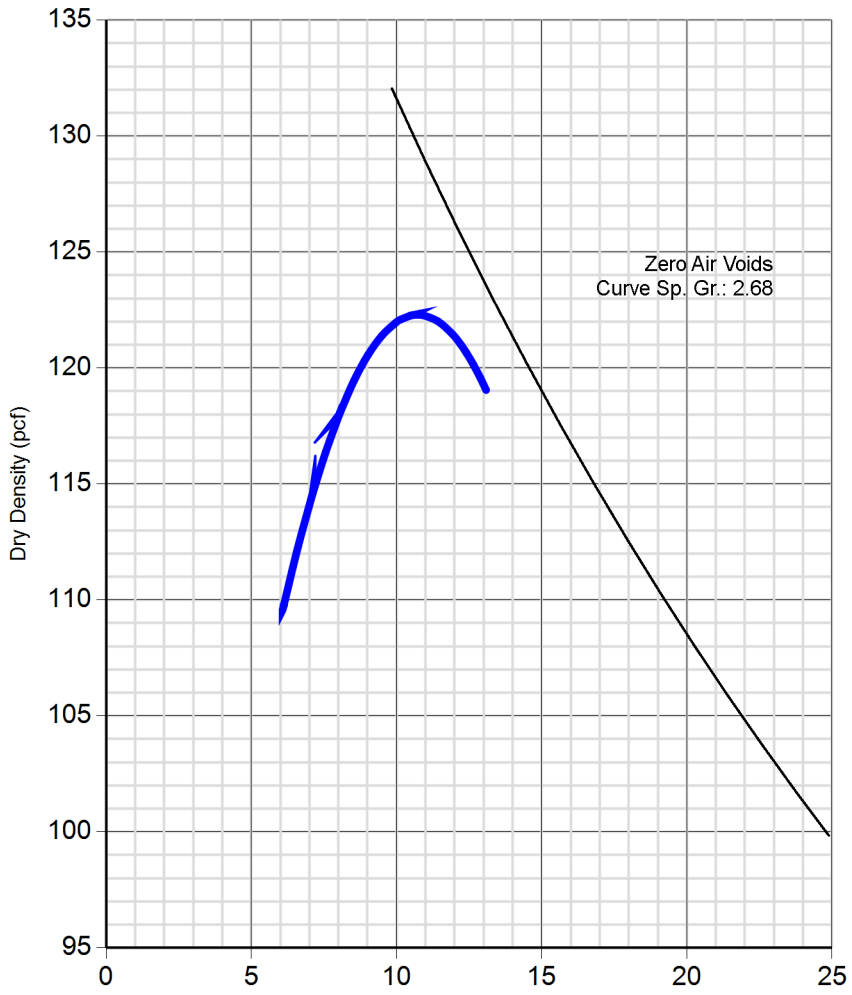

Material proposed to be used as liner

McCay is property owner

PROJECT NO: 2-9628

REPORT NO: 1-0

PROCTOR ID:	3

DATE RECEIVED: 06/03/2024

DATE TESTED: 06/06/2024

TESTED BY: NG

TEST RESULTS

MAXIMUM DRY DENSITY (pcf)
122.3

OPTIMUM MOISTURE (%)
10.7

Prep Method:: dry

Rammer Type: Manual

Proctor points available upon request.

SOURCE: Elder borrow 240th ST

SAMPLE DESCRIPTION:	Sandy Lean CLAY gray trace gravel

Notes/Remarks:
-10 ft
dug from floor of pit at about 10' down.
Elder says it is same material down to
bottom of pit, an additional 20'

APPROVED: *Jeff Roberts*

*Proctor reports shall not be reproduced, except in full, without our written permission.

TEAM Services, Inc.
717 S.E. 6th Street
Des Moines, IA 50309
515-282-8818
515-282-8741
www.teamservices.com
staff@teamservices.com

Particle Size Distribution Report

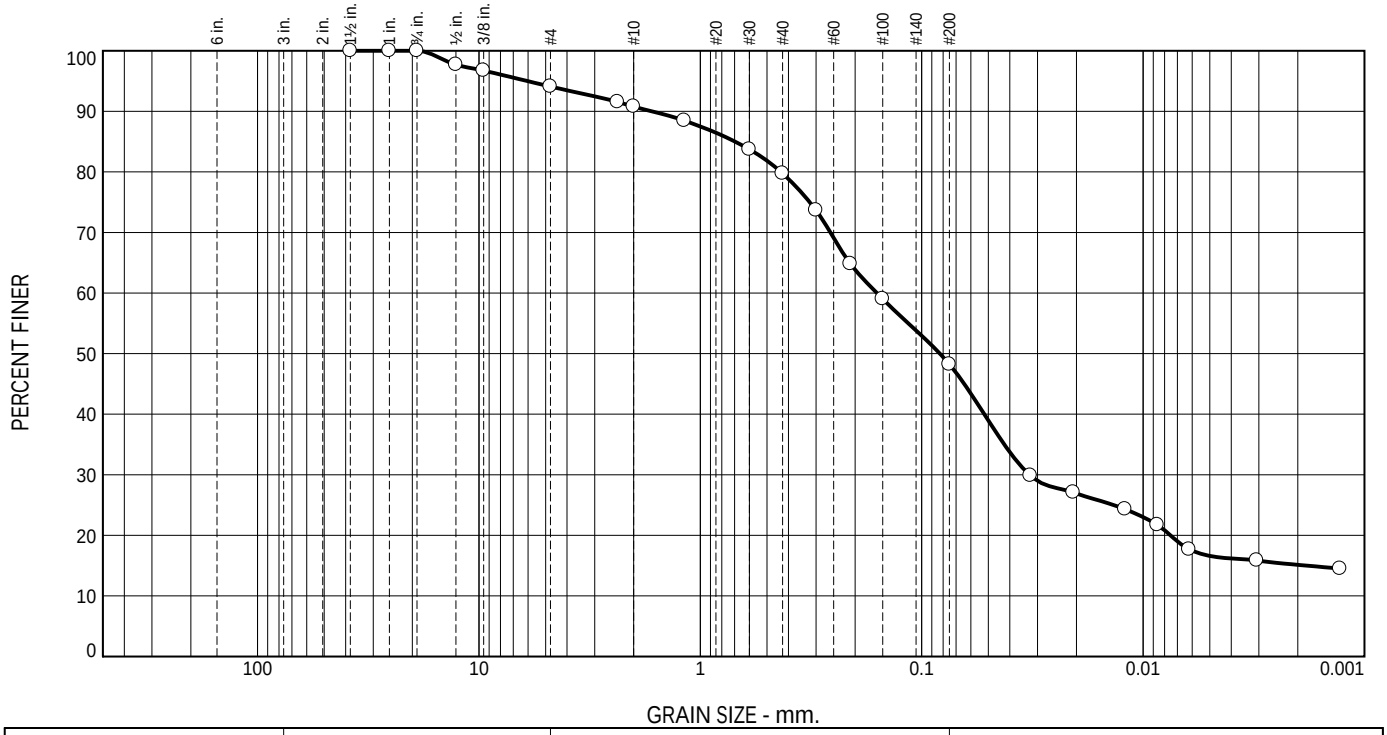

% +3"	% Gravel		% Sand			% Fines	
	Coarse	Fine	Coarse	Medium	Fine	Silt	Clay
0.0	0.0	5.9	3.3	11.1	31.5	33.1	15.1

Test Results (ASTM D6913 & D1140, D7928)			
Sieve Size or Diam. (mm.)	Finer (%)	Spec.* (%)	Out of Spec. (%)
1-1/2"	100.0		
1"	100.0		
3/4"	100.0		
1/2"	97.7		
3/8"	96.7		
#4	94.1		
#8	91.5		
#10	90.8		
#16	88.5		
#30	83.7		
#40	79.7		
#50	73.7		
#70	64.8		
#100	59.0		
#200	48.2		
0.0322 mm.	29.9		
0.0206 mm.	27.1		
0.0120 mm.	24.3		
0.0086 mm.	21.7		
0.0062 mm.	17.7		
0.0031 mm.	15.9		
0.0013 mm.	14.5		

* (no specification provided)

Material Description

Sieve Test (ASTM D6913 & D1140)

Test Date: 6/12/24 Technician: NG

Test Notes

Hydrometer Test (ASTM D7928)

Test Date: 6/12/24 Technician: NG

Test Notes

Atterberg (ASTM D4318)

PL= 14 LL= 24 PI= 10

Coefficients

D_{90}= 1.6585 D_{85}= 0.6963

D_{60}= 0.1593 D_{50}= 0.0828

D_{30}= 0.0326 D_{15}= 0.0018

D_{10}=

C_u= C_c=

USCS (ASTM D2487)

SC

Date Sampled: _____

Date Received: 6/3/24

Checked By: _____

Title: _____

Location: Elder site borrow @240th ST, -3' to-6'
Sample Number: Proctor #1

TEAM Services
Geotechnical and Construction Material Consultants

Client:
Project: Ames Pond Closure and Construction Borrow Testing

Project No: 2-9628 Figure

Particle Size Distribution Report

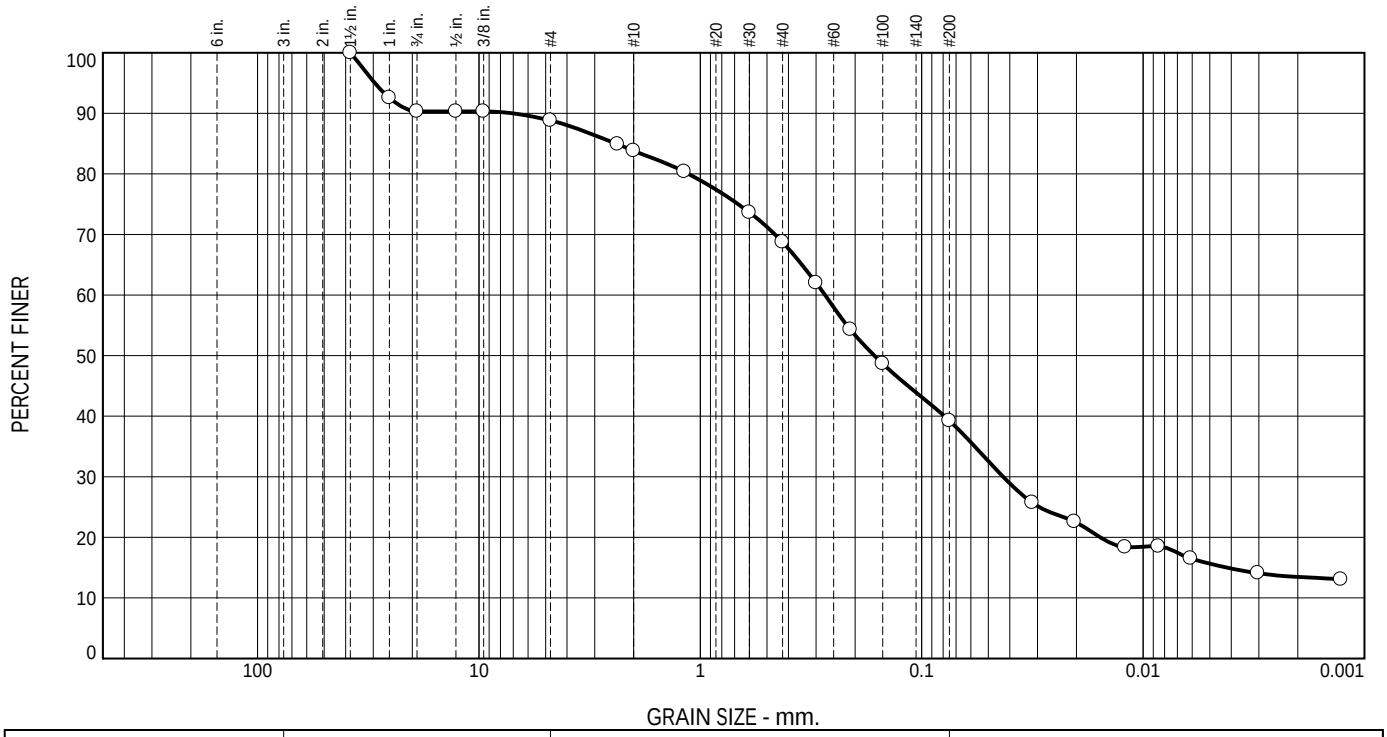

% +3"	% Gravel		% Sand			% Fines	
	Coarse	Fine	Coarse	Medium	Fine	Silt	Clay
0.0	9.7	1.5	5.0	15.1	29.4	25.8	13.5

Test Results (ASTM D6913 & D1140, D7928)

Sieve Size or Diam. (mm.)	Finer (%)	Spec.* (%)	Out of Spec. (%)
1-1/2"	100.0		
1"	92.5		
3/4"	90.3		
1/2"	90.3		
3/8"	90.3		
#4	88.8		
#8	84.9		
#10	83.8		
#16	80.3		
#30	73.6		
#40	68.7		
#50	62.0		
#70	54.3		
#100	48.7		
#200	39.3		
0.0317 mm.	25.7		
0.0204 mm.	22.6		
0.0120 mm.	18.4		
0.0085 mm.	18.5		
0.0061 mm.	16.5		
0.0030 mm.	14.1		
0.0013 mm.	13.1		

* (no specification provided)

Location: West Stockpile
Sample Number: Proctor #2

Material Description

SC, passed double hydrometer

Sieve Test (ASTM D6913 & D1140)

Test Date: 6/12/24 Technician: NG

Test Notes

Hydrometer Test (ASTM D7928)

Test Date: 6/12/24 Technician: NG

Test Notes

Atterberg (ASTM D4318)

PL= 17 LL= 29 PI= 12

Coefficients

D_{90}= 7.0481 D_{85}= 2.4043
D_{60}= 0.2732 D_{50}= 0.1637
D_{30}= 0.0429 D_{15}= 0.0042
D_{10}=
C_u= C_c=

USCS (ASTM D2487)

SC

Date Sampled:
Date Received: 6/3/24
Checked By:
Title:

TEAM Services
Geotechnical and Construction Material Consultants

Client:
Project: Ames Pond Closure and Construction Borrow Testing

Project No: 2-9628

Figure

Particle Size Distribution Report

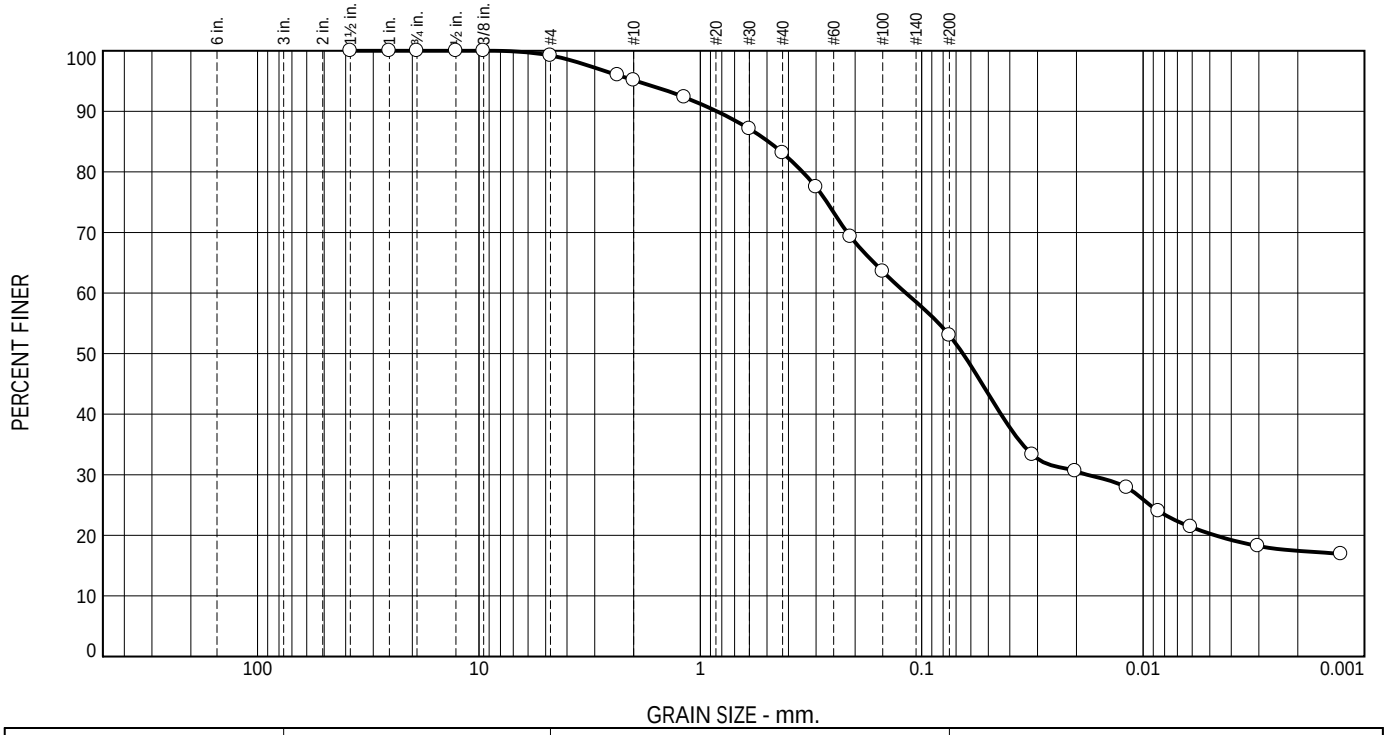

% +3"	% Gravel		% Sand			% Fines	
	Coarse	Fine	Coarse	Medium	Fine	Silt	Clay
0.0	0.0	0.8	4.1	12.0	30.1	35.6	17.4

Test Results (ASTM D6913 & D1140, D7928)			
Sieve Size or Diam. (mm.)	Finer (%)	Spec.* (%)	Out of Spec. (%)
1-1/2"	100.0		
1"	100.0		
3/4"	100.0		
1/2"	100.0		
3/8"	100.0		
#4	99.2		
#8	96.0		
#10	95.1		
#16	92.3		
#30	87.1		
#40	83.1		
#50	77.5		
#70	69.3		
#100	63.6		
#200	53.0		
0.0317 mm.	33.3		
0.0203 mm.	30.6		
0.0118 mm.	27.9		
0.0085 mm.	24.0		
0.0061 mm.	21.4		
0.0030 mm.	18.2		
0.0013 mm.	16.9		

* (no specification provided)

Material Description

Sieve Test (ASTM D6913 & D1140)

Test Date: 6/12/24 Technician: NG

Test Notes

Hydrometer Test (ASTM D7928)

Test Date: 6/12/24 Technician: NG

Test Notes

Atterberg (ASTM D4318)

PL= 14 LL= 26 PI= 12

Coefficients

D_{90}= 0.8430 D_{85}= 0.4923

D_{60}= 0.1178 D_{50}= 0.0651

D_{30}= 0.0179 D_{15}=

D_{10}=

C_u= C_c=

USCS (ASTM D2487)

CL

Date Sampled: _____

Date Received: 6/3/24

Checked By: _____

Title: _____

Location: Elder site borrow @240th ST, -10'
Sample Number: Proctor #3

TEAM Services
Geotechnical and Construction Material Consultants

Client:
Project: Ames Pond Closure and Construction Borrow Testing

Project No: 2-9628 Figure

PERMEABILITY TEST RESULTS
Falling Head

Project Name: Ames Pond Closure and Construction Borrow Testing
Project No.: 2-9628
Sample: 1 **Date Received:** 6/3/2024
Sample Location: Proctor #1
Test Started: 6/7/2024 **Test Competed:** 6/13/2024
Test Procedure: ASTM D 5084 - 03 Falling Head Test (Method B)
Sample Description: 0

INITIAL SAMPLE DATA

Wet Weight (g)	1310.8
Non-cut Height (in)	6.03
Diameter (in)	2.875
Moisture Content (%)	11.4
Dry Unit Weight (pcf)	114.6

FINAL SAMPLE DATA

Wet Weight (g)	1216.3
Final Cut Height (in)	5.45
Diameter (in)	2.875
Moisture Content (%)	14.4
Dry Unit Weight (pcf)	114.5

TEST DATA

Elapsed Time (hr)	Initial Head (in)	Final Head (in)	Coefficient of Permeability, k (cm/s)
21.75	133.66	88.66	8.7E-07
24.83	133.66	88.79	7.6E-07
23.92	133.66	88.66	7.9E-07
22.95	133.66	89.79	8.0E-07
25.05	133.66	87.66	7.8E-07
23.17	133.66	89.66	7.9E-07
Average of last	**4**	**readings**	**7.9E-07**

Proctor Data		
Maximum Dry Denisty	120.6	pcf
Optimum Moisture	11.4	%

Remolded Compaction		
Compaction	95.0	%
Moisture Deviation	0.0	%

717 S.E. 6th St, Des Moines, IA 50309 (515) 282-8818 fax: (515) 282-8741 www.teamservices.com staff@teamservices.com
Des Moines ▪ Omaha ▪ Fort Dodge ▪ Spirit Lake ▪ Mason City ▪ Cedar Rapids ▪ Waterloo ▪ Davenport ▪ Dubuque

PERMEABILITY TEST RESULTS
Falling Head

Project Name: Ames Pond Closure and Construction Borrow Testing
Project No.: 2-9628
Sample: 2 **Date Received:** 6/3/2024
Sample Location: Proctor #2
Test Started: 6/7/2024 **Test Competed:** 6/14/2024
Test Procedure: ASTM D 5084 - 03 Falling Head Test (Method B)
Sample Description: 0

INITIAL SAMPLE DATA

Wet Weight (g)	1321.4
Non-cut Height (in)	6.03
Diameter (in)	2.875
Moisture Content (%)	12.0
Dry Unit Weight (pcf)	114.9

FINAL SAMPLE DATA

Wet Weight (g)	1218.4
Final Cut Height (in)	5.40
Diameter (in)	2.875
Moisture Content (%)	15.8
Dry Unit Weight (pcf)	114.4

TEST DATA

Elapsed Time (hr)	Initial Head (in)	Final Head (in)	Coefficient of Permeability, k (cm/s)
21.75	133.66	104.66	5.2E-07
24.83	133.66	104.28	4.6E-07
23.92	133.66	111.66	3.5E-07
22.95	133.66	111.60	3.6E-07
25.05	133.66	111.91	3.3E-07
23.17	133.66	113.91	3.2E-07
23.92	133.66	112.78	3.3E-07
Average of last	**5**	**readings**	**3.4E-07**

Proctor Data		
Maximum Dry Denisty	120.9	pcf
Optimum Moisture	12	%

Remolded Compaction		
Compaction	95.0	%
Moisture Deviation	0.0	%

717 S.E. 6th St, Des Moines, IA 50309 (515) 282-8818 fax: (515) 282-8741 www.teamservices.com staff@teamservices.com
Des Moines ▪ Omaha ▪ Fort Dodge ▪ Spirit Lake ▪ Mason City ▪ Cedar Rapids ▪ Waterloo ▪ Davenport ▪ Dubuque

PERMEABILITY TEST RESULTS
Falling Head

Project Name: Ames Pond Closure and Construction Borrow Testing
Project No.: 2-9628
Sample: 3 **Date Received:** 6/3/2024
Sample Location: Proctor #3
Test Started: 6/7/2024 **Test Competed:** 6/18/2024
Test Procedure: ASTM D 5084 - 03 Falling Head Test (Method B)
Sample Description: 0

INITIAL SAMPLE DATA

Wet Weight (g)	1311.5
Non-cut Height (in)	5.98
Diameter (in)	2.875
Moisture Content (%)	10.7
Dry Unit Weight (pcf)	116.2

FINAL SAMPLE DATA

Wet Weight (g)	1228.3
Final Cut Height (in)	5.43
Diameter (in)	2.875
Moisture Content (%)	14.1
Dry Unit Weight (pcf)	116.3

TEST DATA

Elapsed Time (hr)	Initial Head (in)	Final Head (in)	Coefficient of Permeability, k (cm/s)
21.75	133.70	103.70	5.3E-07
24.83	133.70	120.83	1.9E-07
23.92	133.70	123.89	1.5E-07
22.95	133.70	129.83	5.9E-08
25.05	133.70	125.20	1.2E-07
23.17	133.70	126.20	1.1E-07
23.92	133.70	126.58	1.0E-07
71.58	133.70	111.70	1.1E-07
25.30	133.70	125.83	1.1E-07
Average of last	**5**	**readings**	**1.1E-07**

Proctor Data		
Maximum Dry Denisty	122.3	pcf
Optimum Moisture	10.7	%

Remolded Compaction		
Compaction	95.0	%
Moisture Deviation	0.0	%

717 S.E. 6th St, Des Moines, IA 50309 (515) 282-8818 fax: (515) 282-8741 www.teamservices.com staff@teamservices.com
Des Moines ▪ Omaha ▪ Fort Dodge ▪ Spirit Lake ▪ Mason City ▪ Cedar Rapids ▪ Waterloo ▪ Davenport ▪ Dubuque

E.2 – Clay Fill Representative Sample Test Results

Particle Size Distribution Report

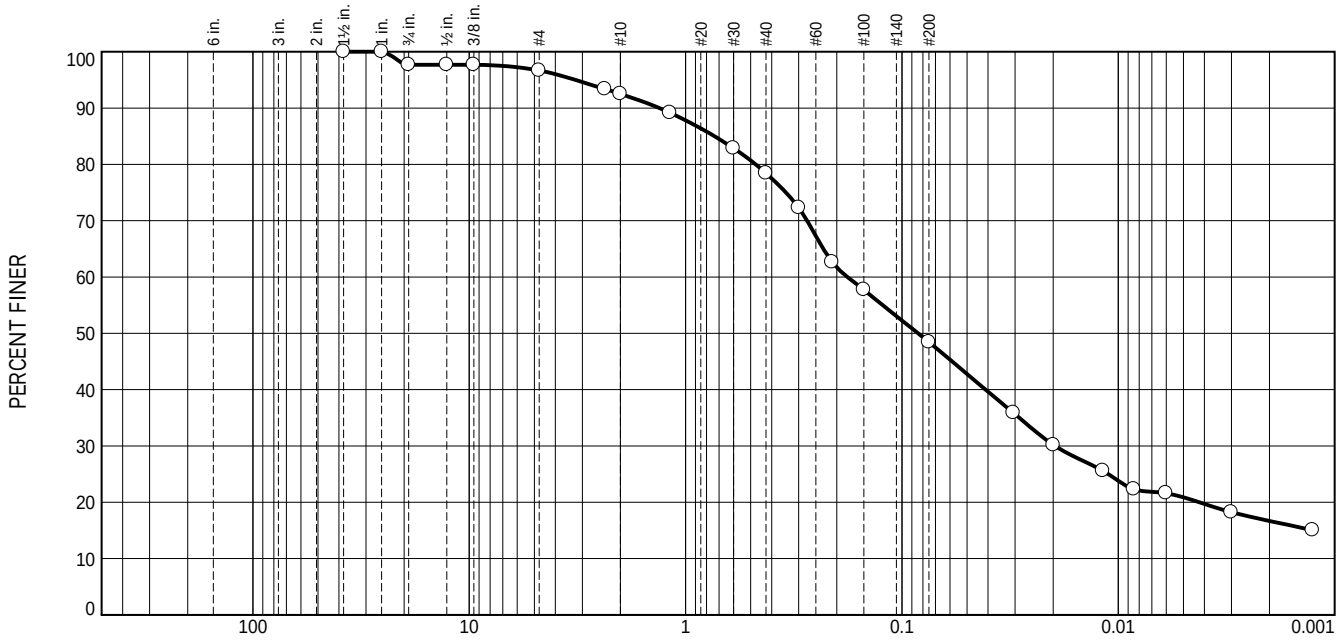

% +3"	% Gravel		% Sand			% Fines	
	Coarse	Fine	Coarse	Medium	Fine	Silt	Clay
0.0	2.3	1.0	4.2	14.1	30.0	31.7	16.7

Test Results (ASTM D6913 & D1140, D7928)			
Sieve Size or Diam. (mm.)	Finer (%)	Spec.* (%)	Out of Spec. (%)
1-1/2"	100.0		
1"	100.0		
3/4"	97.7		
1/2"	97.7		
3/8"	97.7		
#4	96.7		
#8	93.4		
#10	92.5		
#16	89.2		
#30	82.9		
#40	78.4		
#50	72.3		
#70	62.7		
#100	57.7		
#200	48.4		
0.0305 mm.	35.9		
0.0199 mm.	30.1		
0.0118 mm.	25.6		
0.0085 mm.	22.3		
0.0060 mm.	21.6		
0.0030 mm.	18.2		
0.0013 mm.	15.0		

· (no specification provided)

Location: Clay Fill- Grab 1

Material Description

Clayey sand, dark brown

Sieve Test (ASTM D6913 & D1140)

Test Date: 8/27/24 Technician: NG

Test Notes

Hydrometer Test (ASTM D7928)

Test Date: 8/27/24 Technician: NG

Test Notes

Standard Proctor (ASTM D-698) = 120.6 pcf 12.0%

Atterberg (ASTM D4318)

PL= 18 LL= 32 PI= 14

Coefficients

D_{90}= 1.3180 D_{85}= 0.7346

D_{60}= 0.1786 D_{50}= 0.0842

D_{30}= 0.0196 D_{15}=

D_{10}=

C_u= C_c=

USCS (ASTM D2487)

SC

Date Sampled: _____

Date Received: 8/23/24

Checked By: _____

Title: _____

TEAM Services
Geotechnical and Construction Material Consultants

Client: SCS Engineers
Project: 2024 City of Ames Ash Pond Closure

Project No: 2-9571 Figure

MOISTURE - DENSITY RELATIONSHIP REPORT

(Proctor Test)

ASTM D 698-12 Method A Standard

PROJECT: **2024 City of Ames Ash Pond Closure**
Ames, IA

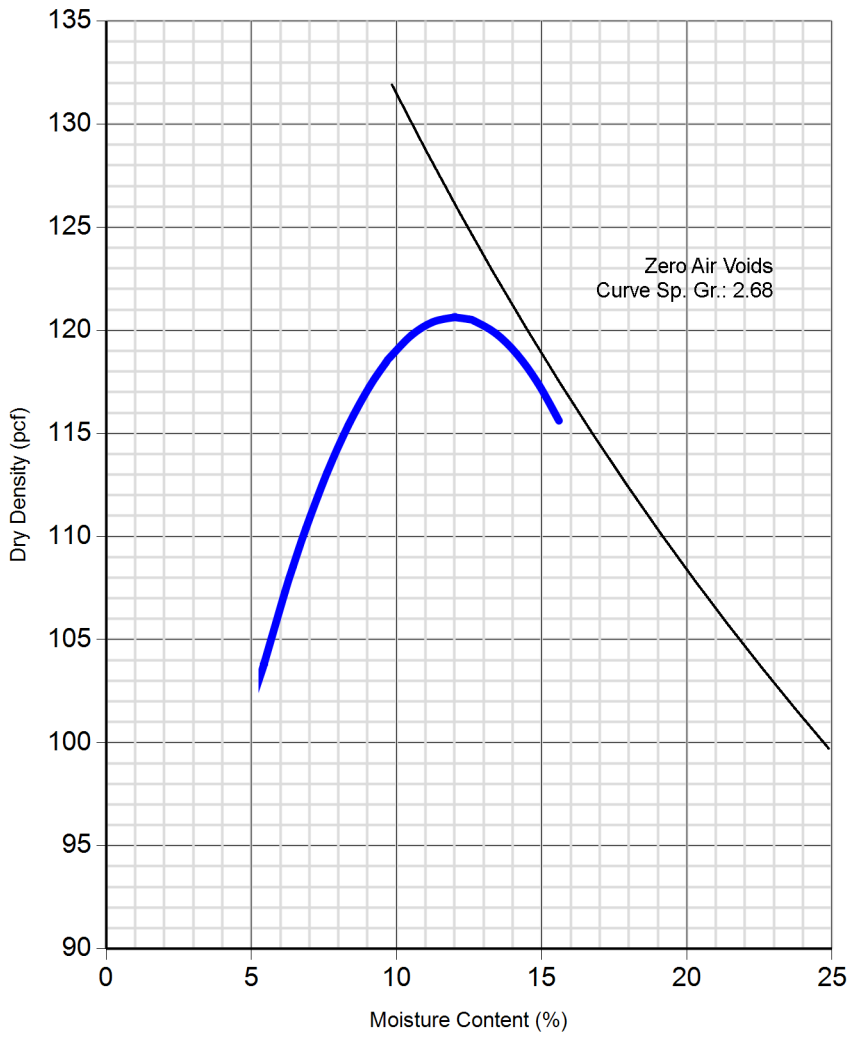

PROJECT NO: 2-9571

REPORT NO: 1-1

***** REVISED *****

PROCTOR ID:	**1**

DATE RECEIVED: 08/23/2024

DATE TESTED: 08/28/2024

TESTED BY: RA

TEST RESULTS

MAXIMUM DRY DENSITY (pcf)
120.6

OPTIMUM MOISTURE (%)
12.0

Prep Method:: Moist

Rammer Type: Manual

Proctor points available upon request.

SOURCE: Clay Fill Grab One

SAMPLE DESCRIPTION: Clayey SAND, dark brown

Notes/Remarks:

APPROVED: *Andy Eisinger*

*Proctor reports shall not be reproduced, except in full, without our written permission.

TEAM Services, Inc.
717 S.E. 6th Street
Des Moines, IA 50309
515-282-8818
515-282-8741
www.teamservices.com
staff@teamservices.com

Particle Size Distribution Report

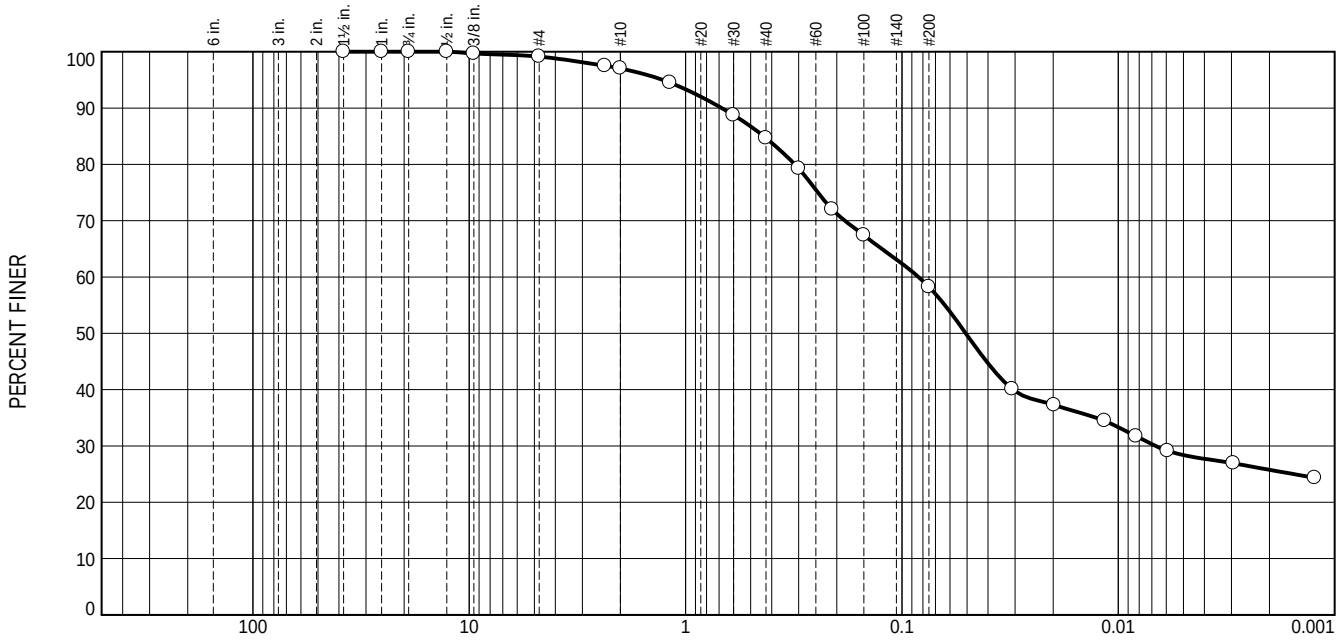

% +3"	% Gravel		% Sand			% Fines	
	Coarse	Fine	Coarse	Medium	Fine	Silt	Clay
0.0	0.0	0.9	2.0	12.4	26.5	32.4	25.8

Test Results (ASTM D6913 & D1140, D7928)			
Sieve Size or Diam. (mm.)	Finer (%)	Spec.* (%)	Out of Spec. (%)
1-1/2"	100.0		
1"	100.0		
3/4"	100.0		
1/2"	100.0		
3/8"	99.7		
#4	99.1		
#8	97.5		
#10	97.1		
#16	94.5		
#30	88.8		
#40	84.7		
#50	79.3		
#70	72.0		
#100	67.4		
#200	58.2		
0.0309 mm.	40.1		
0.0198 mm.	37.3		
0.0116 mm.	34.5		
0.0083 mm.	31.7		
0.0059 mm.	29.1		
0.0029 mm.	26.9		
0.0012 mm.	24.3		

* (no specification provided)

Location: Clay Fill Grab 2

Material Description CL
Light Brown trace Gray

Sieve Test (ASTM D6913 & D1140)

Test Date: 9/3/24 Technician: NG

Test Notes

Hydrometer Test (ASTM D7928)

Test Date: 9/3/24 Technician: NG

Test Notes

Standard Proctor (ASTM D-698) = 121.2 pcf 12.2%

Atterberg (ASTM D4318)

PL= 15 LL= 30 PI= 15

Coefficients

D_{90}= 0.6801 D_{85}= 0.4353
D_{60}= 0.0838 D_{50}= 0.0507
D_{30}= 0.0067 D_{15}=
D_{10}=
C_u= C_c=

USCS (ASTM D2487)

CL

Date Sampled: _____
Date Received: 8/30/24
Checked By: _____
Title: _____

TEAM Services
Geotechnical and Construction Material Consultants

Client:
Project: Ames Pond Closure and Construction Borrow Testing

Project No: 2-9628 Figure

MOISTURE - DENSITY RELATIONSHIP REPORT

(Proctor Test)

ASTM D 698-12 Method A Standard

PROJECT: **2024 City of Ames Ash Pond Closure**
Ames, IA

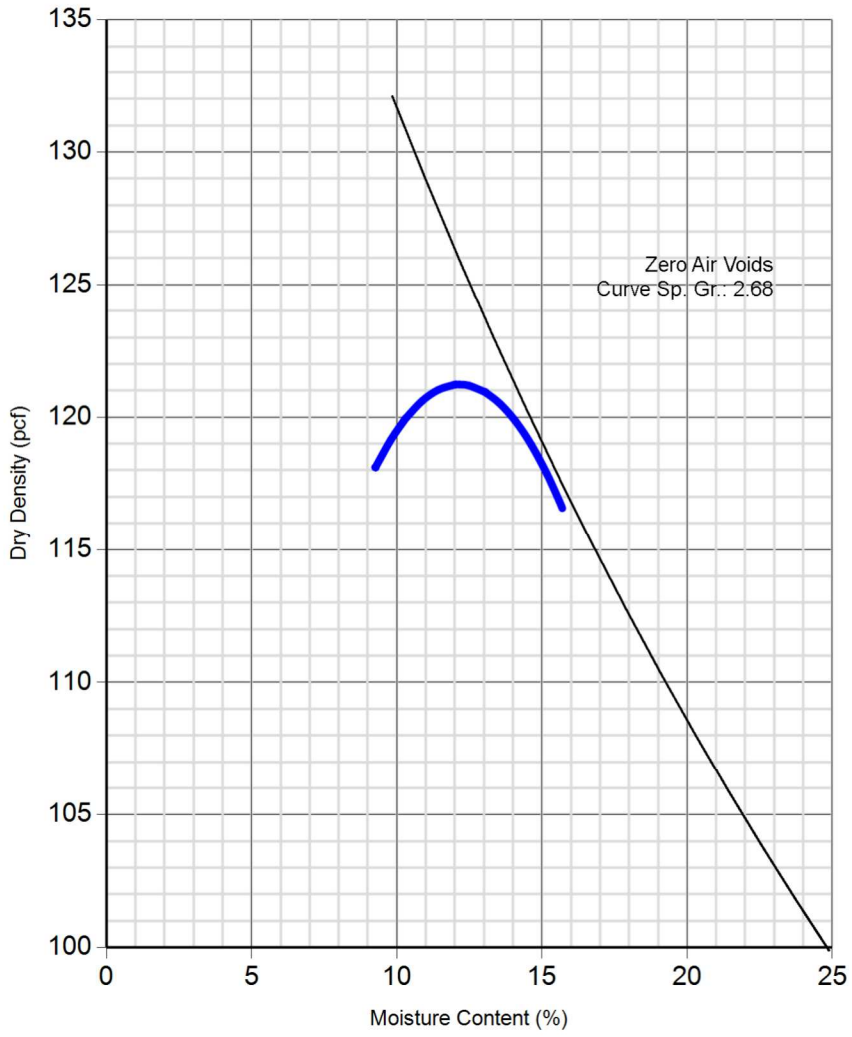

PROJECT NO: 2-9571

REPORT NO: 1-1

*** REVISED ***

PROCTOR ID:	2

DATE RECEIVED: 08/29/2024

DATE TESTED: 08/30/2024

TESTED BY: AE

TEST RESULTS

MAXIMUM DRY DENSITY (pcf)
121.2

OPTIMUM MOISTURE (%)
12.2

Prep Method:: Moist

Rammer Type: Manual

Proctor points available upon request.

SOURCE: Clay Fill Grab Two

SAMPLE DESCRIPTION: Clayey SAND/Sandy Lean CLAY, trace gravel, orange brown

Notes/Remarks:

APPROVED: *Andy Eisinger*

*Proctor reports shall not be reproduced, except in full, without our written permission.

TEAM Services, Inc.
717 S.E. 6th Street
Des Moines, IA 50309
515-282-8818
515-282-8741
www.teamservices.com
staff@teamservices.com

Particle Size Distribution Report

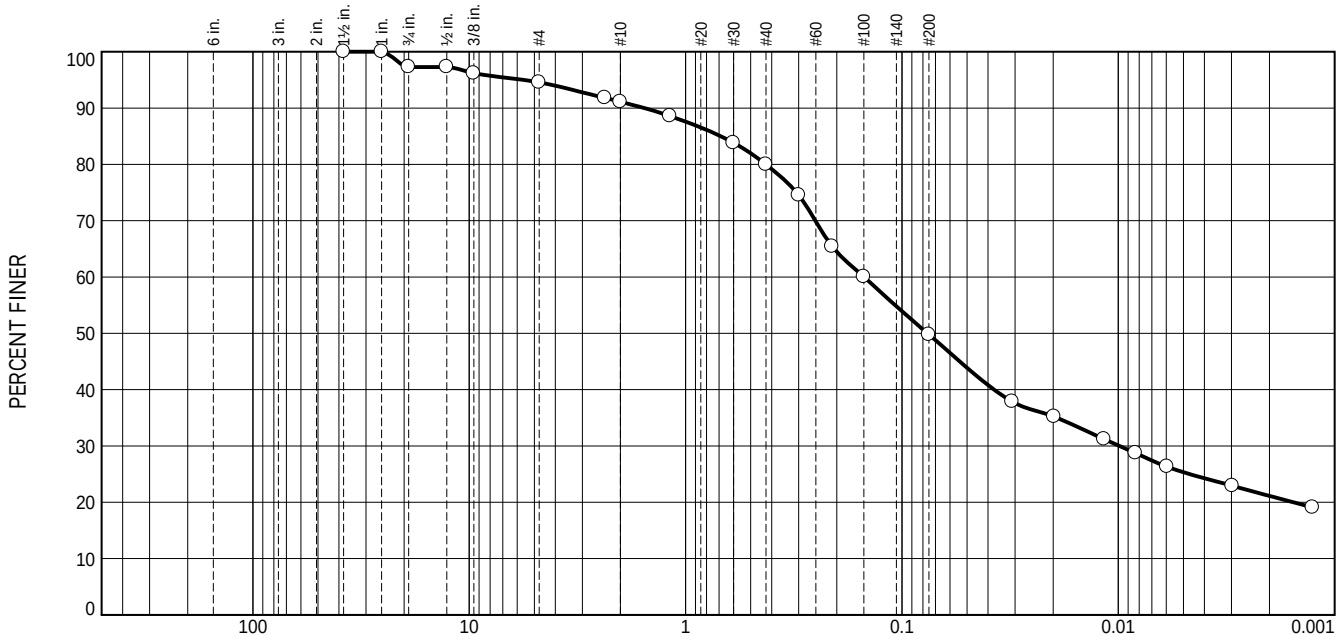

% +3"	% Gravel		% Sand			% Fines	
	Coarse	Fine	Coarse	Medium	Fine	Silt	Clay
0.0	2.7	2.7	3.5	11.1	30.2	28.7	21.1

Test Results (ASTM D6913 & D1140, D7928)

Sieve Size or Diam. (mm.)	Finer (%)	Spec.* (%)	Out of Spec. (%)
1-1/2"	100.0		
1"	100.0		
3/4"	97.3		
1/2"	97.3		
3/8"	96.2		
#4	94.6		
#8	91.8		
#10	91.1		
#16	88.6		
#30	83.8		
#40	80.0		
#50	74.5		
#70	65.4		
#100	60.0		
#200	49.8		
0.0309 mm.	37.8		
0.0198 mm.	35.2		
0.0116 mm.	31.2		
0.0083 mm.	28.7		
0.0060 mm.	26.3		
0.0030 mm.	22.9		
0.0013 mm.	19.1		

· (no specification provided)

Location: Clay Fill Grab 3

Material Description

Clayey sand, dark brown

Sieve Test (ASTM D6913 & D1140)

Test Date: 9/19/24 Technician: NG

Test Notes

Hydrometer Test (ASTM D7928)

Test Date: 9/19/24 Technician: NG

Test Notes

ASTM D698 = 114.5 pcf 14.5%

Atterberg (ASTM D4318)

PL= 17 LL= 32 PI= 15

Coefficients

D_{90}= 1.5510 D_{85}= 0.6878

D_{60}= 0.1495 D_{50}= 0.0761

D_{30}= 0.0099 D_{15}=

D_{10}=

C_u= C_c=

USCS (ASTM D2487)

SC

Date Sampled: _____

Date Received: 9/11/24

Checked By: _____

Title: _____

TEAM Services
Geotechnical and Construction Material Consultants

Client: SCS Engineers
Project: 2024 City of Ames Ash Pond Closure

Project No: 2-9571 Figure

MOISTURE - DENSITY RELATIONSHIP REPORT

(Proctor Test)

ASTM D 698-12 Method A Standard

PROJECT: **2024 City of Ames Ash Pond Closure**
Ames, IA

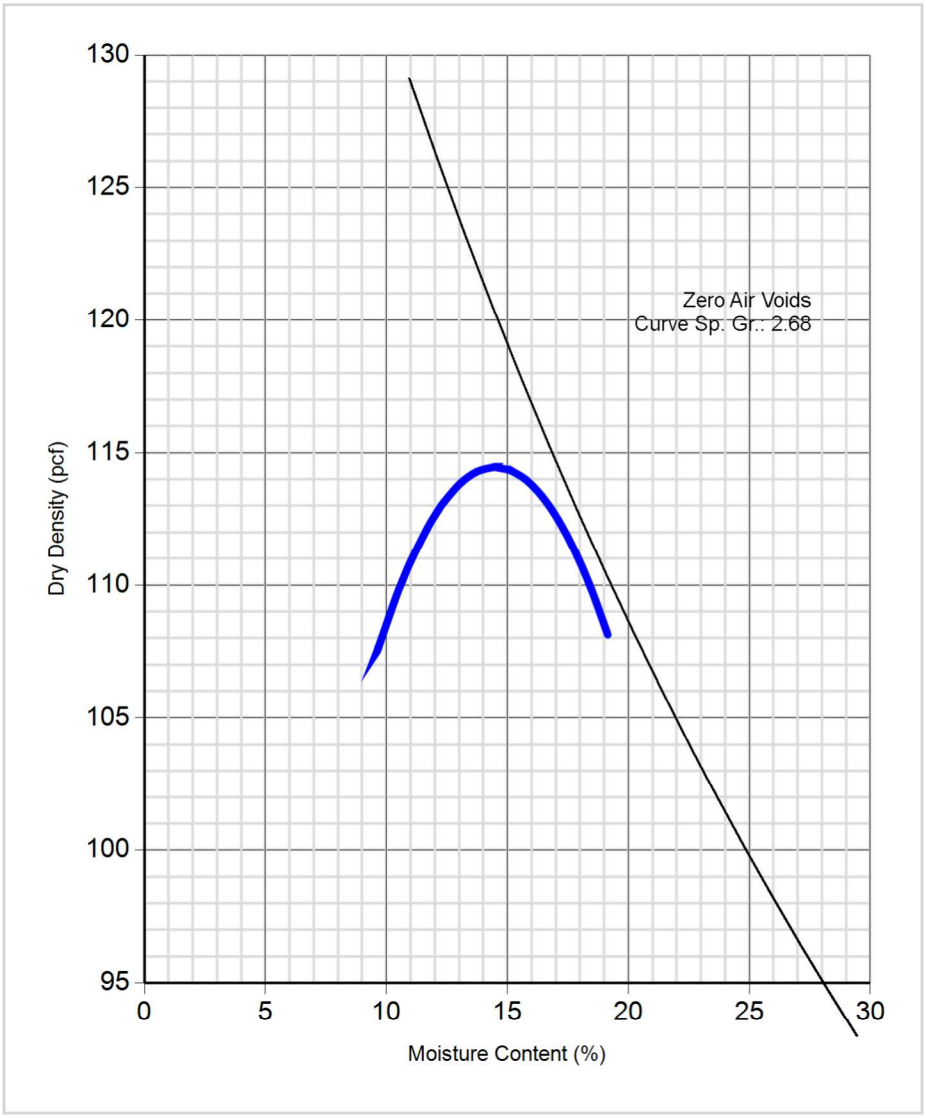

PROJECT NO: 2-9571

REPORT NO: 2-0

PROCTOR ID:	2

DATE RECEIVED: 09/11/2024

DATE TESTED: 09/17/2024

TESTED BY: RA

TEST RESULTS

MAXIMUM DRY DENSITY (pcf)
114.5

OPTIMUM MOISTURE (%)
14.5

Prep Method:: Moist

Rammer Type: Manual

Proctor points available upon request.

SOURCE: Clay Fill - Grab 3

SAMPLE DESCRIPTION: Sandy lean CLAY, with gravel, gray/brown/dark brown mix

Notes/Remarks:

APPROVED: *Andy Eisinger*

*Proctor reports shall not be reproduced, except in full, without our written permission.

TEAM Services, Inc.
717 S.E. 6th Street
Des Moines, IA 50309
515-282-8818
515-282-8741
www.teamservices.com
staff@teamservices.com

Particle Size Distribution Report

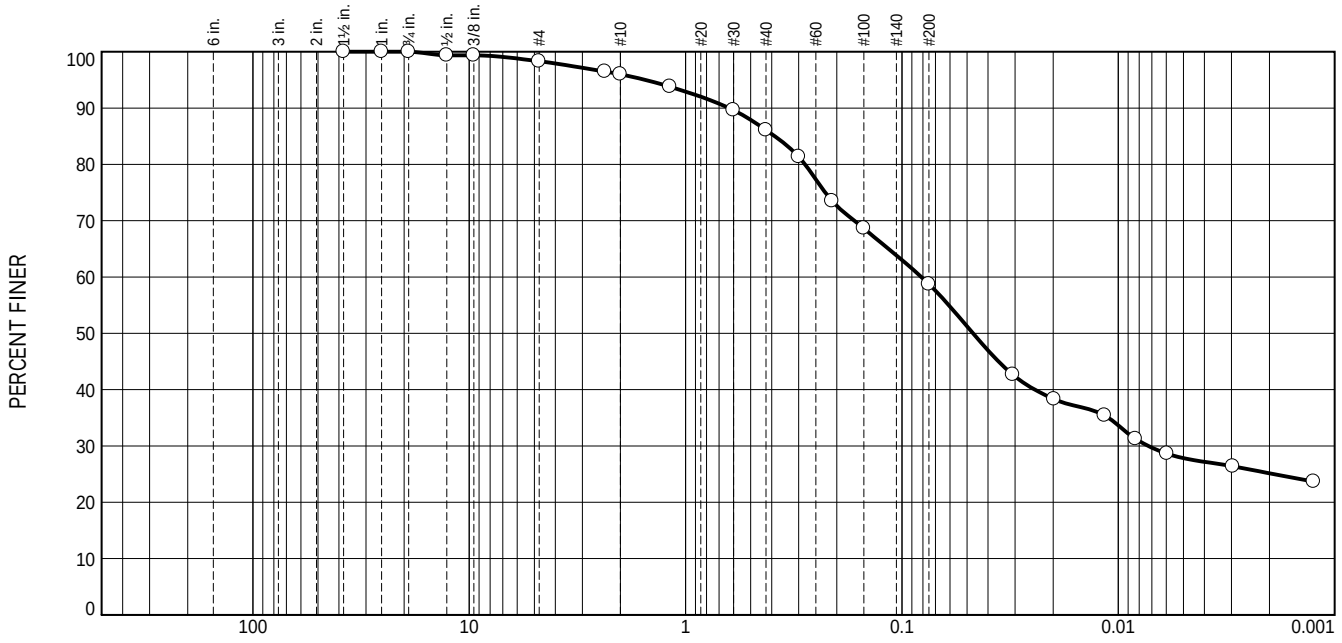

% +3"	% Gravel		% Sand			% Fines	
	Coarse	Fine	Coarse	Medium	Fine	Silt	Clay
0.0	0.0	1.7	2.3	9.9	27.4	33.6	25.1

Test Results (ASTM D6913 & D1140, D7928)			
Sieve Size or Diam. (mm.)	Finer (%)	Spec.* (%)	Out of Spec. (%)
1-1/2"	100.0		
1"	100.0		
3/4"	100.0		
1/2"	99.4		
3/8"	99.4		
#4	98.3		
#8	96.5		
#10	96.0		
#16	93.8		
#30	89.6		
#40	86.1		
#50	81.4		
#70	73.5		
#100	68.6		
#200	58.7		
0.0307 mm.	42.6		
0.0198 mm.	38.3		
0.0116 mm.	35.4		
0.0083 mm.	31.3		
0.0060 mm.	28.6		
0.0030 mm.	26.4		
0.0012 mm.	23.7		

· (no specification provided)

Location: Clay Fill Grab 4

Material Description

Sandy Lean Clay, orange/brown

Sieve Test (ASTM D6913 & D1140)

Test Date: 9/19/24 Technician: NG

Test Notes

Hydrometer Test (ASTM D7928)

Test Date: 9/19/24 Technician: NG

Test Notes

ASTM D698 = 115.3 pcf 13.0%

Atterberg (ASTM D4318)

PL= 15 LL= 30 PI= 15

Coefficients

D_{90}= 0.6292 D_{85}= 0.3872

D_{60}= 0.0813 D_{50}= 0.0469

D_{30}= 0.0073 D_{15}=

D_{10}=

C_u= C_c=

USCS (ASTM D2487)

CL

Date Sampled:

Date Received: 9/11/24

Checked By:

Title:

TEAM Services
Geotechnical and Construction Material Consultants

Client: SCS Engineers
Project: 2024 City of Ames Ash Pond Closure

Project No: 2-9571 Figure

MOISTURE - DENSITY RELATIONSHIP REPORT

(Proctor Test)

ASTM D 698-12 Method A Standard

PROJECT: **2024 City of Ames Ash Pond Closure**
Ames, IA

TEAM Services
ISO 9001 International Accredited Laboratory
Geotechnical and Construction Material Consultants

No Data Available
No Data Available

Zero Air Voids
Curve Sp. Gr.: 2.68

PROJECT NO: 2-9571

REPORT NO: 2-0

PROCTOR ID:	5

DATE RECEIVED: 09/11/2024

DATE TESTED: 09/18/2024

TESTED BY: JR

TEST RESULTS

MAXIMUM DRY DENSITY (pcf)

115.3

OPTIMUM MOISTURE (%)

13.0

Prep Method:: Moist

Rammer Type: Mechanical

Proctor points available upon request.

SOURCE: Clay Fill Grab 4

SAMPLE DESCRIPTION: Sandy Lean CLAY, light orange brown

Notes/Remarks:

APPROVED: *Andy Eisinger*

*Proctor reports shall not be reproduced, except in full, without our written permission.

TEAM Services, Inc.
717 S.E. 6th Street
Des Moines, IA 50309
515-282-8818
515-282-8741
www.teamservices.com
staff@teamservices.com

Particle Size Distribution Report

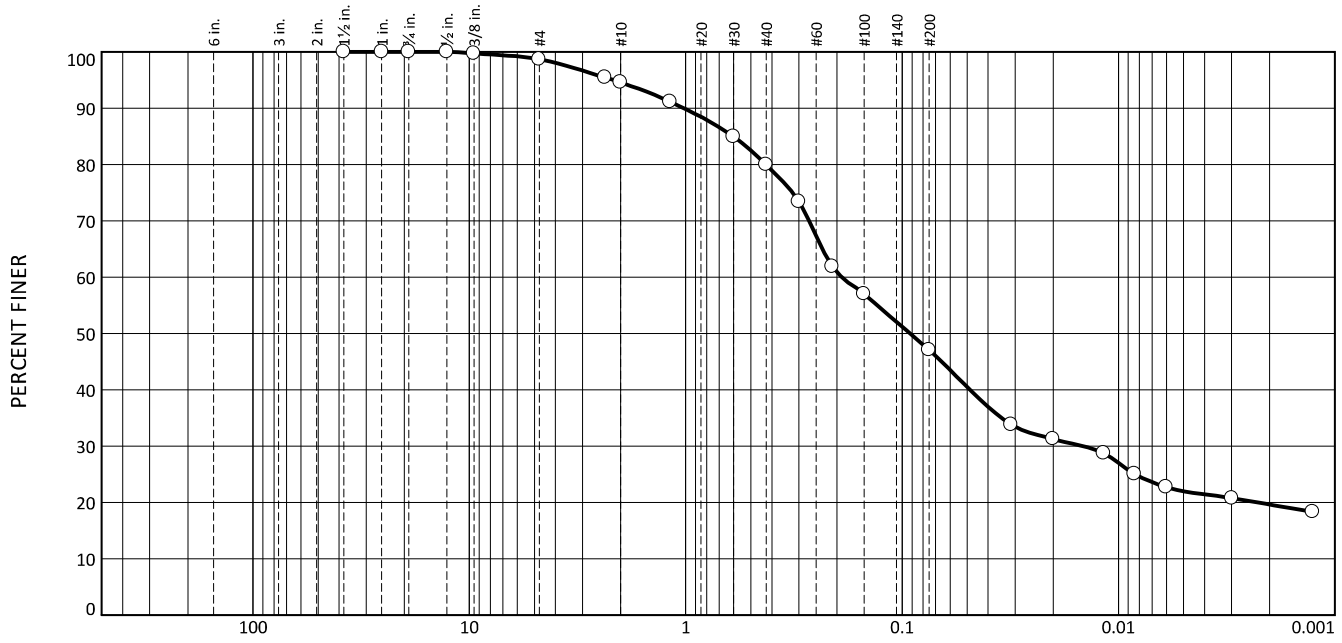

% +3"	% Gravel		% Sand			% Fines	
	Coarse	Fine	Coarse	Medium	Fine	Silt	Clay
0.0	0.0	1.3	4.1	14.6	32.9	27.5	19.6

Test Results (ASTM D6913 & D1140, D7928)

Sieve Size or Diam. (mm.)	Finer (%)	Spec.* (%)	Out of Spec. (%)
1-1/2"	100.0		
1"	100.0		
3/4"	100.0		
1/2"	100.0		
3/8"	99.7		
#4	98.7		
#8	95.5		
#10	94.6		
#16	91.1		
#30	84.9		
#40	80.0		
#50	73.4		
#70	61.9		
#100	57.0		
#200	47.1		
0.0313 mm.	33.8		
0.0200 mm.	31.3		
0.0117 mm.	28.7		
0.0084 mm.	25.0		
0.0060 mm.	22.7		
0.0030 mm.	20.7		
0.0013 mm.	18.3		

· (no specification provided)

Location: Clay Fill Grab 5

Material Description

Sandy Lean Clay, gray/brown

Sieve Test (ASTM D6913 & D1140)

Test Date: 9/19/24 **Technician:** NG

Test Notes

Hydrometer Test (ASTM D7928)

Test Date: 9/19/24 **Technician:** NG

Test Notes

ASTM D698 = 119.3 pcf 11.6%

Atterberg (ASTM D4318)

PL= 15 LL= 26 PI= 11

Coefficients

D_{90}= 1.0211 D_{85}= 0.6031

D_{60}= 0.1901 D_{50}= 0.0918

D_{30}= 0.0147 D_{15}=

D_{10}=

C_u= C_c=

USCS (ASTM D2487)

SC

Date Sampled:

Date Received: 9/11/24

Checked By:

Title:

TEAM Services
Geotechnical and Construction Material Consultants

Client: SCS Engineers
Project: 2024 City of Ames Ash Pond Closure

Project No: 2-9571 **Figure**

MOISTURE - DENSITY RELATIONSHIP REPORT

(Proctor Test)

ASTM D 698-12 Method A Standard

PROJECT: **2024 City of Ames Ash Pond Closure**
Ames, IA

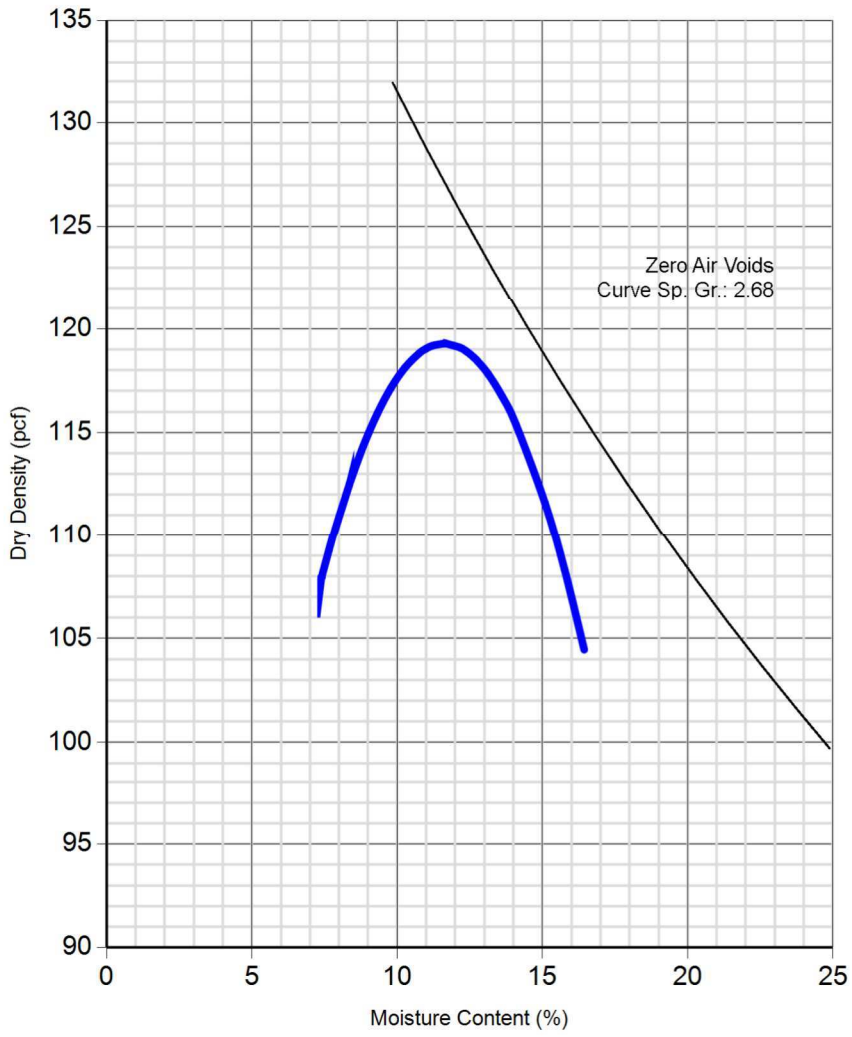

PROJECT NO: 2-9571

REPORT NO: 2-0

PROCTOR ID:	4

DATE RECEIVED: 09/11/2024

DATE TESTED: 09/18/2024

TESTED BY: JR

TEST RESULTS

MAXIMUM DRY DENSITY (pcf)
119.3

OPTIMUM MOISTURE (%)
11.6

Prep Method:: Moist

Rammer Type: Mechanical

Proctor points available upon request.

SOURCE: Clay Fill Grab 5

SAMPLE DESCRIPTION: Very Sandy Lean CLAY, medium gray brown

Notes/Remarks:

APPROVED: *Andy Eisinger*

*Proctor reports shall not be reproduced, except in full, without our written permission.

TEAM Services, Inc.
717 S.E. 6th Street
Des Moines, IA 50309
515-282-8818
515-282-8741
www.teamservices.com
staff@teamservices.com

E.3 – Clay Liner Source Test Results

Project: City of Ames Ash Pond Closure
SCS Project #: 27219356.02

Section: 33 22 00
Title: Submittal #S15B&C – Soils

Submittal Review

- [X] Conforms as submitted
- [ ] Conforms as noted – Resubmittal is:
  - [ ] Not required
  - [ ] Required
  - [ ] Noted portions only
  - [ ] For record only
- [ ] Does not conform
- [ ] Not required by contract documents
- [ ] For information only

Corrections or comments made on submittals during this review do not relieve the contractor from compliance with requirements of the drawings and specifications. This check is only for review of general conformance with the design concept of the project and general compliance with the information given in the contract documents. The contractor is responsible for; confirming and correlating all quantities and dimensions; selecting fabrication processes and techniques of construction; coordinating contractor's work with that of all other trades; and performing contractor's work in a safe and satisfactory manner.

Comments:

Soil being delivered to the site differed from previous source samples tested. This sample was taken from the material being stockpiled onsite. To expedite confirmation of soil acceptability, sample results were submitted as they were received. Soil Submittals B and C were combined for clarity.

Reviewed By: Matt Kuhlenengel	Date: 9/24/2024
SCS QC Review By: Ben Graham	Date: 9/24/2024

G:\Project\27219356.02\Data and Calculations\Submittals\S15 - Soils\SCS Review S15A-Soils_240924.docx

SHOP DRAWING TRANSMITTAL

DATE: 9/10/2024

Project: Ames Ash Pond Closure & RDF Ash Pond Construction

Specification Section Number: 33 22 00 Earth work

Transmittal Number: 15b

1st Submittal _____ or Resubmital __X_____

Contract Item	Description of Material	Manufacturer	Drawing or Data No.	Action Taken
16a,35,39,42	Soils - Perm			
	Soils - proctors			

As stated in the Contract Documents, the undersigned CONTRACTOR's submission of these Shop Drawings or samples shall constitute a representative to the OWNER and the ENGINEER that the CONTRACTOR has either determined and verified all quantities, dimensions, field construction criteria, materials, catalogue numbers and similar data or he assumes full responsibility for doing so, and that he has reviewed and coordinated each Shop Drawing or sample with the requirements of the work and the Contract Documents and he represents to the OWNER and the ENGINEER that item(s) described by these Shop Drawings do comply with the requirements of the Contract Documents. The undersigned Contractor certifies that the equipment included in this submittal complies with the latest requirements of the Occupational Health and Safety Act of 1970 including any standards or regulations established by the U.S. Secretary of Labor in administration of said act, and the Iowa Occupational Safety and Health Statutes.

9/10/2024

Supplier/Subcontractor: **4** **(Date)**

JB Holland **JB Holland Construction, Inc.**

2191 State Hwy 52, Decorah, IA 52101

FOR ENGINEER'S USE

n as designated above in accordance with the following legend:

A- No Exception Taken

B- Make Corrections Noted & Resubmit

C- Revise & Resubmit

D- Rejected

E- Submit Specified Item

BY: _____

DATE: _____

SHOP DRAWING TRANSMITTAL

DATE: 9/4/2024

Project: Ames Ash Pond Closure & RDF Ash Pond Construction

Specification Section Number: 33 22 00 Earth work

Transmittal Number: 15b

1st Submittal _____ or Resubmital __X_____

Contract Item	Description of Material	Manufacturer	Drawing or Data No.	Action Taken
16a,35,39,42	Soils - Atterberg			
	Soils - Sieve analysis			

As stated in the Contract Documents, the undersigned CONTRACTOR's submission of these Shop Drawings or samples shall constitute a representative to the OWNER and the ENGINEER that the CONTRACTOR has either determined and verified all quantities, dimensions, field construction criteria, materials, catalogue numbers and similar data or he assumes full responsibility for doing so, and that he has reviewed and coordinated each Shop Drawing or sample with the requirements of the work and the Contract Documents and he represents to the OWNER and the ENGINEER that item(s) described by these Shop Drawings do comply with the requirements of the Contract Documents. The undersigned Contractor certifies that the equipment included in this submittal complies with the latest requirements of the Occupational Health and Safety Act of 1970 including any standards or regulations established by the U.S. Secretary of Labor in administration of said act, and the Iowa Occupational Safety and Health Statutes.

9/4/2024

Supplier/Subcontractor: **4** **(Date)**

JB Holland **JB Holland Construction, Inc.**

2191 State Hwy 52, Decorah, IA 52101

FOR ENGINEER'S USE

n as designated above in accordance with the following legend:

A- No Exception Taken

B- Make Corrections Noted & Resubmit

C- Revise & Resubmit

D- Rejected

E- Submit Specified Item

BY: _____

DATE: _____

MOISTURE - DENSITY RELATIONSHIP REPORT

(Proctor Test)

ASTM D 698-12 Method A Standard

PROJECT: **2024 City of Ames Ash Pond Closure**
Ames, IA

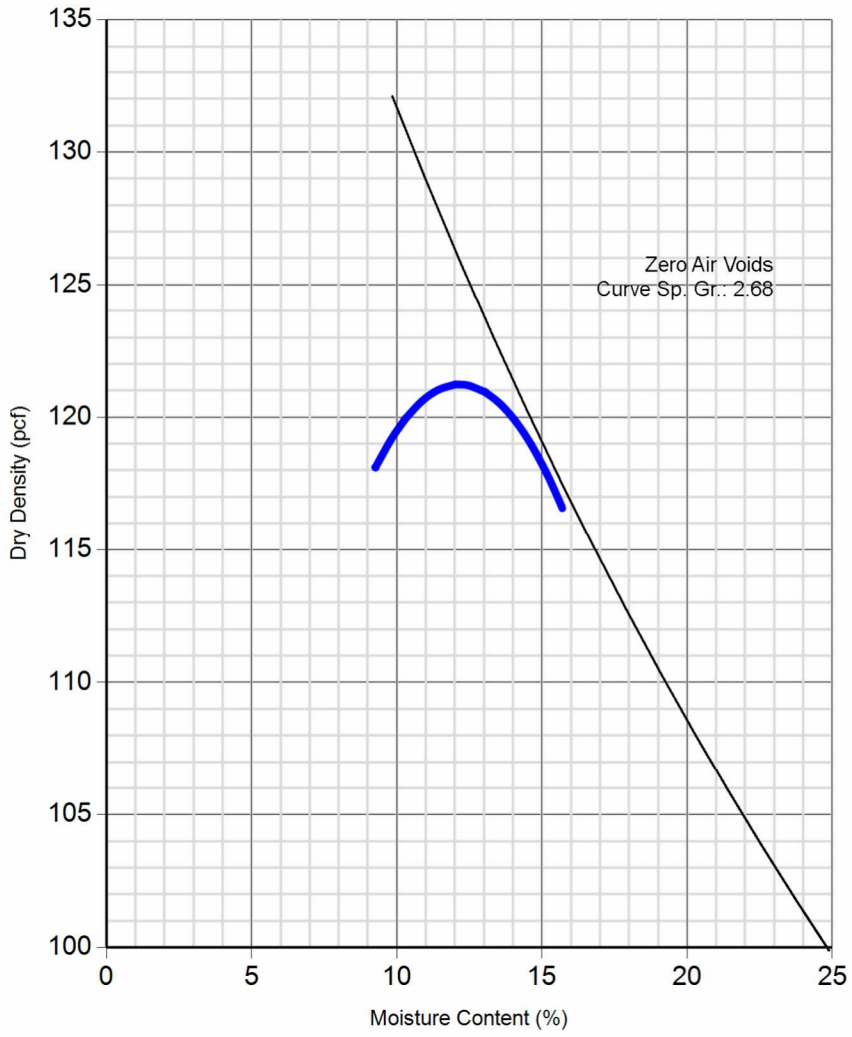

PROJECT NO: 2-9571

REPORT NO: 1-1

*** REVISED ***

PROCTOR ID:	2

DATE RECEIVED: 08/29/2024

DATE TESTED: 08/30/2024

TESTED BY: AE

TEST RESULTS

MAXIMUM DRY DENSITY (pcf)
121.2

OPTIMUM MOISTURE (%)
12.2

Prep Method:: Moist

Rammer Type: Manual

Proctor points available upon request.

SOURCE: Clay Fill Grab Two

SAMPLE DESCRIPTION: Clayey SAND/Sandy Lean CLAY, trace gravel, orange brown

Notes/Remarks:

APPROVED: *Andy Eisinger*

*Proctor reports shall not be reproduced, except in full, without our written permission.

TEAM Services, Inc.
717 S.E. 6th Street
Des Moines, IA 50309
515-282-8818
515-282-8741
www.teamservices.com
staff@teamservices.com

PERMEABILITY TEST RESULTS
Falling Head

Project Name: Ames Pond Closure and Construction Borrow Testing
Project No.: 2-9628
Sample: 0 **Date Received:** 8/29/2024
Sample Location: Clay Fill Grab 2
Test Started: 8/30/2024 **Test Competed:** 9/9/2024
Test Procedure: ASTM D 5084 - 03 Falling Head Test (Method B)
Sample Description: 0

INITIAL SAMPLE DATA

Wet Weight (g)	1315.8
Non-cut Height (in)	5.98
Diameter (in)	2.875
Moisture Content (%)	12.2
Dry Unit Weight (pcf)	115.1

FINAL SAMPLE DATA

Wet Weight (g)	1208.7
Final Cut Height (in)	5.37
Diameter (in)	2.875
Moisture Content (%)	14.8
Dry Unit Weight (pcf)	115.0

TEST DATA

Elapsed Time (hr)	Initial Head (in)	Final Head (in)	Coefficient of Permeability, k (cm/s)
27.25	133.71	121.34	1.6E-07
17.75	133.71	129.46	8.3E-08
23.00	133.71	129.34	6.6E-08
22.67	133.71	129.46	6.5E-08
24.17	133.71	129.59	5.9E-08
24.08	133.71	129.46	6.1E-08
24.00	133.71	129.46	6.1E-08
50.67	133.71	124.90	6.1E-08
22.33	133.71	129.77	6.1E-08
Average of last	**4**	**readings**	**6.1E-08**

Proctor Data		
Maximum Dry Denisty	121.2	pcf
Optimum Moisture	12.2	%

Remolded Compaction		
Compaction	95.0	%
Moisture Deviation	0.0	%

717 S.E. 6th St, Des Moines, IA 50309 (515) 282-8818 fax: (515) 282-8741 www.teamservices.com staff@teamservices.com

Des Moines ▪ Omaha ▪ Fort Dodge ▪ Spirit Lake ▪ Mason City ▪ Cedar Rapids ▪ Waterloo ▪ Davenport ▪ Dubuque

Particle Size Distribution Report

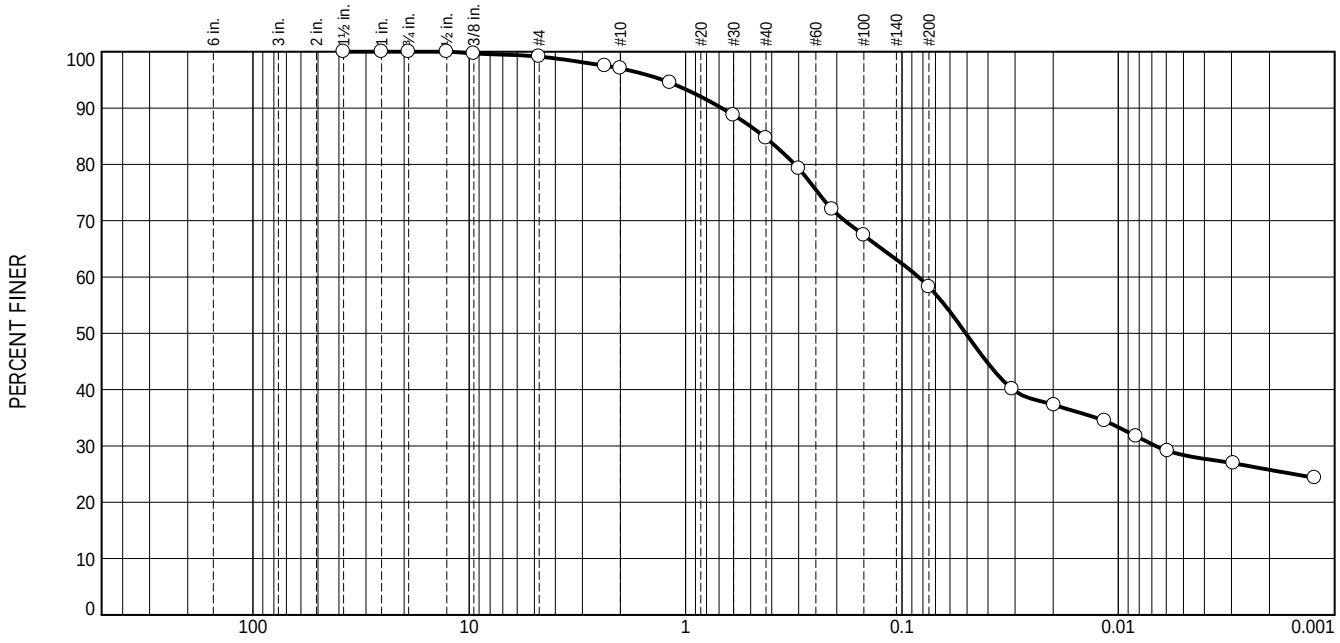

% +3"	% Gravel		% Sand			% Fines	
	Coarse	Fine	Coarse	Medium	Fine	Silt	Clay
0.0	0.0	0.9	2.0	12.4	26.5	32.4	25.8

Test Results (ASTM D6913 & D1140, D7928)			
Sieve Size or Diam. (mm.)	Finer (%)	Spec.* (%)	Out of Spec. (%)
1-1/2"	100.0		
1"	100.0		
3/4"	100.0		
1/2"	100.0		
3/8"	99.7		
#4	99.1		
#8	97.5		
#10	97.1		
#16	94.5		
#30	88.8		
#40	84.7		
#50	79.3		
#70	72.0		
#100	67.4		
#200	58.2		
0.0309 mm.	40.1		
0.0198 mm.	37.3		
0.0116 mm.	34.5		
0.0083 mm.	31.7		
0.0059 mm.	29.1		
0.0029 mm.	26.9		
0.0012 mm.	24.3		

* (no specification provided)

Location: Clay Fill Grab 2

Material Description CL
Light Brown trace Gray

Sieve Test (ASTM D6913 & D1140)

Test Date: 9/3/24 Technician: NG

Test Notes

Hydrometer Test (ASTM D7928)

Test Date: 9/3/24 Technician: NG

Test Notes

Standard Proctor (ASTM D-698) = 121.2 pcf 12.2%

Atterberg (ASTM D4318)

PL= 15 LL= 30 PI= 15

Coefficients

D_{90}= 0.6801 D_{85}= 0.4353
D_{60}= 0.0838 D_{50}= 0.0507
D_{30}= 0.0067 D_{15}=
D_{10}=
C_u= C_c=

USCS (ASTM D2487)

CL

Date Sampled: _____
Date Received: 8/30/24
Checked By: _____
Title: _____

TEAM Services
Geotechnical and Construction Material Consultants

Client:
Project: Ames Pond Closure and Construction Borrow Testing

Project No: 2-9628 Figure

Liquid Limit, Plastic Limit & Plasticity Index of Soils

ASTM D-4318 "Atterberg Limits"

TEAM Services
ISO 9001 International Accredited Laboratory
Geotechnical and Construction Material Consultants

717 S.E. 6th Street
Des Moines, IA 50309
Phone: 515-282-8818
Fax: 515-282-8741
www.teamservices.com
staff@teamservices.com

PROJECT NO: **2-9628**

PROJECT: **Ames Pond Closure and Construction Borrow Testing**
Ames, IA

REPORT NO: **2-0**

SAMPLE ID: **7**

SAMPLE SOURCE: Clay Fill Grab 2

SAMPLE DESCRIPTION: CL Lt Brown trace gray

NOTES:

DATE RECEIVED: 2024-08-30

DATE TESTED: 2024-09-03

TESTED BY: NG

Wet (air-dried) Preparation. PL 2 Trials. Manual LL Device. Hand PL Rolling. Metal Grooving Tool

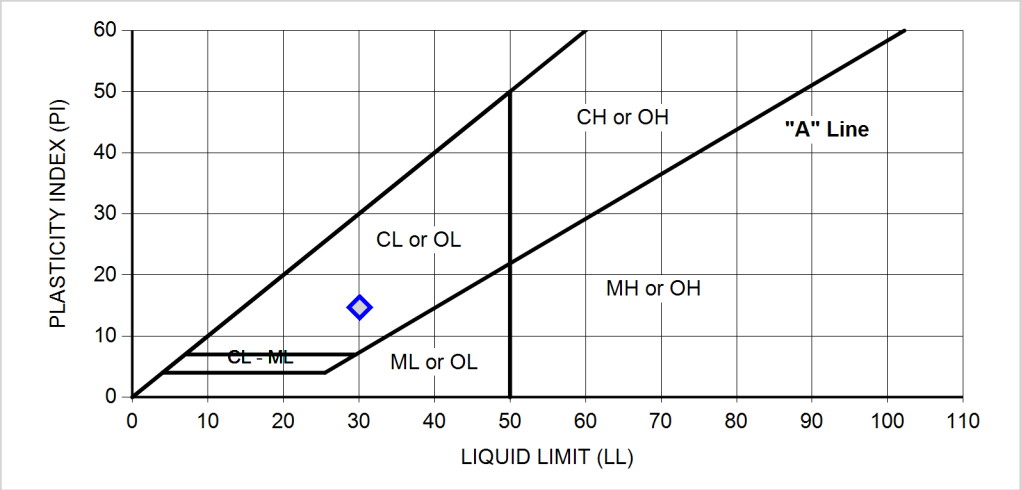

[CL] Lean Clay [CH] Fat Clay [ML] Silt [MH] Elastic Silt [OL] Organic Clay/Silt [OH] Organic Clay/Silt

LIQUID LIMIT TEST DATA Method B

NUMBER OF DROPS	WT. WET SOIL + TARE (g)	WT. DRY SOIL + TARE (g)	WT. TARE (g)	LIQUID LIMIT
25	59.90	55.00	38.64	30.00
25	60.12	55.21	38.96	30.20

AVG. LIQUID LIMIT (LL)

30

PLASTIC LIMIT TEST DATA

WT. WET SOIL + TARE (g)	WT. DRY SOIL + TARE (g)	WT. TARE (g)	PLASTIC LIMIT
49.30	47.93	39.07	15.50
47.27	46.18	39.05	15.30

AVG. PLASTIC LIMIT (PL)

15

MATERIAL CLASSIFICATION: **CL - Lean Clay**

PLASTICITY INDEX (PI)

15

Approved: Andy Eisinger

E.4 – Clay Liner Representative Sample Test Results

Particle Size Distribution Report

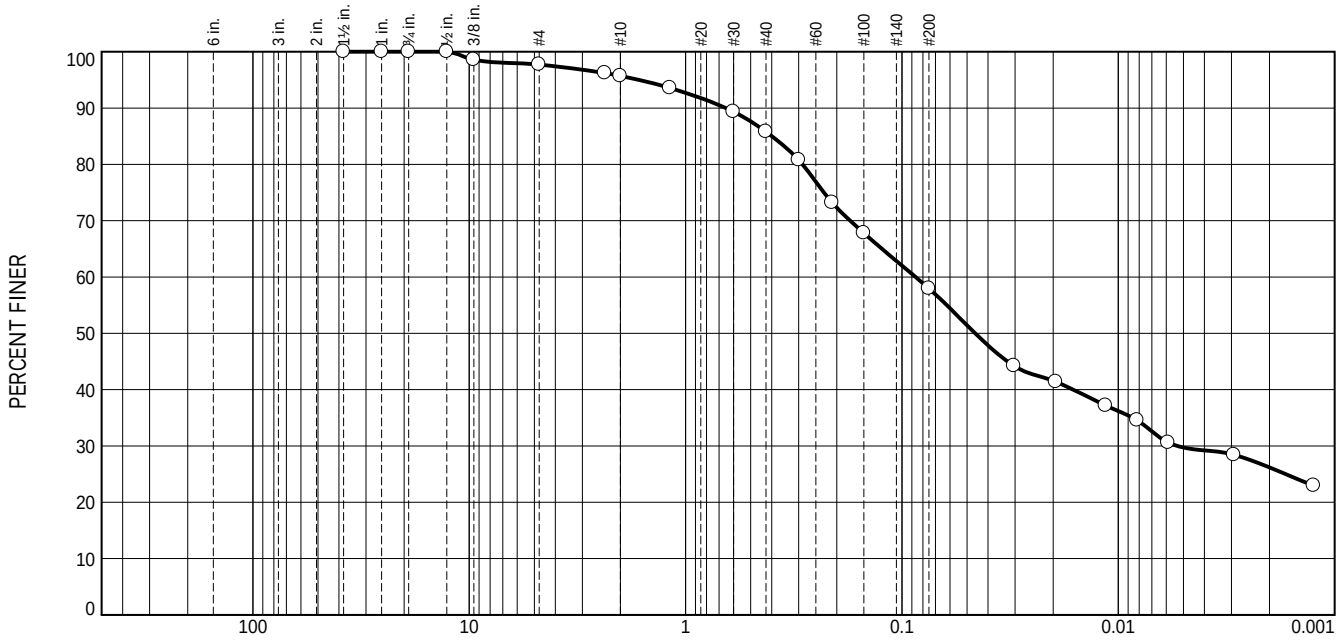

% +3"	% Gravel		% Sand			% Fines	
	Coarse	Fine	Coarse	Medium	Fine	Silt	Clay
0.0	0.0	2.3	2.0	9.9	27.8	31.8	26.2

Test Results (ASTM D6913 & D1140, D7928)			
Sieve Size or Diam. (mm.)	Finer (%)	Spec.* (%)	Out of Spec. (%)
1-1/2"	100.0		
1"	100.0		
3/4"	100.0		
1/2"	100.0		
3/8"	98.6		
#4	97.7		
#8	96.2		
#10	95.7		
#16	93.6		
#30	89.4		
#40	85.8		
#50	80.8		
#70	73.2		
#100	67.8		
#200	58.0		
0.0303 mm.	44.2		
0.0194 mm.	41.4		
0.0114 mm.	37.2		
0.0082 mm.	34.6		
0.0059 mm.	30.6		
0.0029 mm.	28.4		
0.0012 mm.	23.0		

· (no specification provided)

Location: Clay Liner Grab 1

Material Description

Sandy Lean Clay, orange/gray

Sieve Test (ASTM D6913 & D1140)

Test Date: 9/19/24 Technician: NG

Test Notes

Hydrometer Test (ASTM D7928)

Test Date: 9/19/24 Technician: NG

Test Notes

ASTM D698 = 120.4 pcf 11.7%

Atterberg (ASTM D4318)

PL= 15 LL= 30 PI= 15

Coefficients

D_{90}= 0.6512 D_{85}= 0.3990

D_{60}= 0.0864 D_{50}= 0.0459

D_{30}= 0.0054 D_{15}=

D_{10}=

C_u= C_c=

USCS (ASTM D2487)

CL

Date Sampled: _____

Date Received: 9/11/24

Checked By: _____

Title: _____

TEAM Services
Geotechnical and Construction Material Consultants

Client: SCS Engineers
Project: 2024 City of Ames Ash Pond Closure

Project No: 2-9571

Figure

MOISTURE - DENSITY RELATIONSHIP REPORT

(Proctor Test)

ASTM D 698-12 Method A Standard

PROJECT: **2024 City of Ames Ash Pond Closure**
Ames, IA

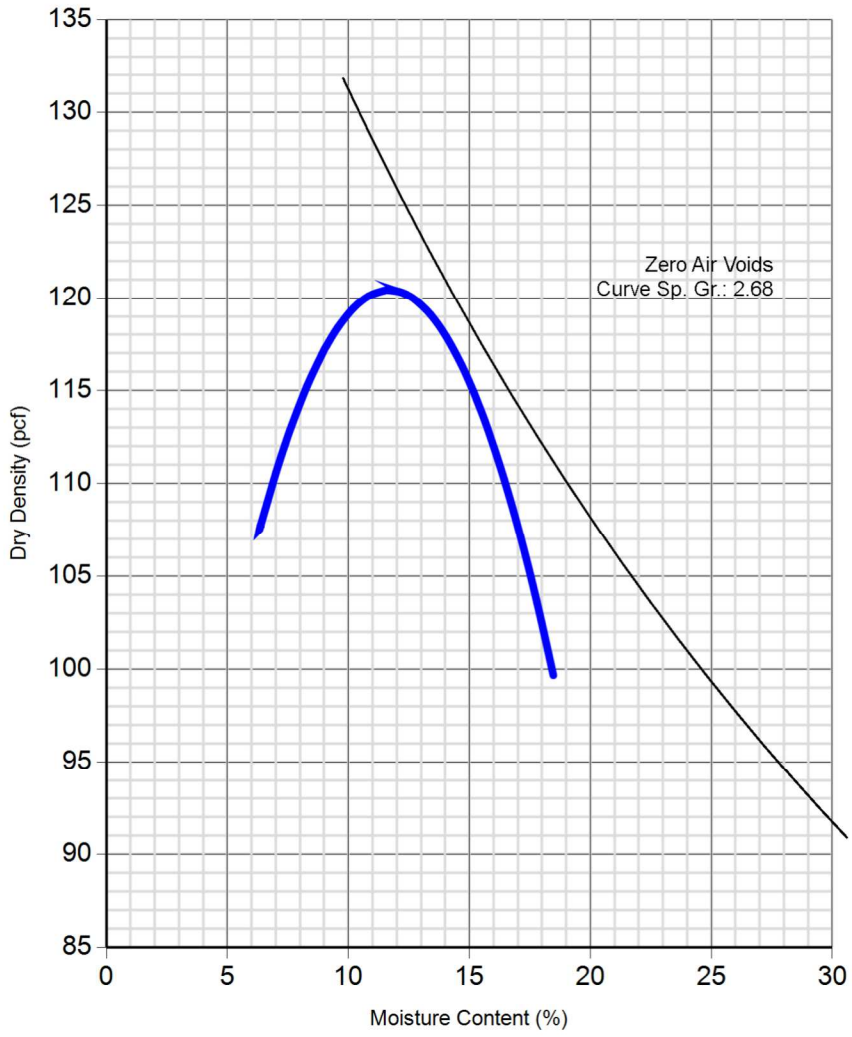

PROJECT NO: 2-9571

REPORT NO: 2-0

PROCTOR ID:	3

DATE RECEIVED: 09/11/2024

DATE TESTED: 09/18/2024

TESTED BY: RA

TEST RESULTS

MAXIMUM DRY DENSITY (pcf)
120.4

OPTIMUM MOISTURE (%)
11.7

Prep Method:: Moist

Rammer Type: Manual

Proctor points available upon request.

SOURCE: Clay Liner Grab 1

SAMPLE DESCRIPTION: Very Sandy Lean CLAY, medium orange gray

Notes/Remarks:

APPROVED: *Andy Eisinger*

*Proctor reports shall not be reproduced, except in full, without our written permission.

TEAM Services, Inc.
717 S.E. 6th Street
Des Moines, IA 50309
515-282-8818
515-282-8741
www.teamservices.com
staff@teamservices.com

E.5 – Undisturbed In-Situ Sample Test Results (Shelby Tubes)

PERMEABILITY TEST RESULTS
Falling Head

Project Name: 2024 City of Ames Ash Pond Closure
Project No.: 2-9571
Sample: ST-1R **Date Received:** 9/5/2024
Sample Location: 0
Test Started: 9/5/2024 **Test Competed:** 9/13/2024
Test Procedure: ASTM D 5084 - 03 Falling Head Test (Method B)
Sample Description: CL with sand trace coarse sand Lt Brown trace Gray

INITIAL SAMPLE DATA

Wet Weight (g)	1388.4
Non-cut Height (in)	6.08
Diameter (in)	2.875
Moisture Content (%)	12.9
Dry Unit Weight (pcf)	118.6

FINAL SAMPLE DATA

Wet Weight (g)	1244.1
Final Cut Height (in)	5.34
Diameter (in)	2.875
Moisture Content (%)	15.4
Dry Unit Weight (pcf)	118.4

TEST DATA

Elapsed Time (hr)	Initial Head (in)	Final Head (in)	Coefficient of Permeability, k (cm/s)
17.75	133.60	125.60	1.6E-07
50.67	133.60	129.67	2.7E-08
22.33	133.60	132.35	2.0E-08
23.00	133.60	131.98	2.5E-08
24.17	133.60	131.98	2.4E-08
24.17	133.60	131.85	2.5E-08
23.67	133.60	131.98	2.4E-08
Average of last	**4**	**readings**	**2.4E-08**

717 S.E. 6th St, Des Moines, IA 50309 (515) 282-8818 fax: (515) 282-8741 www.teamservices.com staff@teamservices.com
Des Moines ▪ Omaha ▪ Fort Dodge ▪ Spirit Lake ▪ Mason City ▪ Cedar Rapids ▪ Waterloo ▪ Davenport ▪ Dubuque

PERMEABILITY TEST RESULTS
Falling Head

Project Name: 2024 City of Ames Ash Pond Closure
Project No.: 2-9571
Sample: ST-2R **Date Received:** 9/5/2024
Sample Location: 0
Test Started: 9/5/2024 **Test Competed:** 9/13/2024
Test Procedure: ASTM D 5084 - 03 Falling Head Test (Method B)
Sample Description: CL with sand trace coarse sand Lt Brown trace Gray

INITIAL SAMPLE DATA

Wet Weight (g)	1344.6
Non-cut Height (in)	5.98
Diameter (in)	2.875
Moisture Content (%)	13.0
Dry Unit Weight (pcf)	116.7

FINAL SAMPLE DATA

Wet Weight (g)	1207.7
Final Cut Height (in)	5.25
Diameter (in)	2.875
Moisture Content (%)	16.0
Dry Unit Weight (pcf)	116.4

TEST DATA

Elapsed Time (hr)	Initial Head (in)	Final Head (in)	Coefficient of Permeability, k (cm/s)
17.75	133.70	125.58	1.6E-07
50.67	133.70	130.33	2.3E-08
22.33	133.70	132.20	2.3E-08
23.00	133.70	132.08	2.4E-08
24.17	133.70	131.95	2.5E-08
24.17	133.70	131.95	2.5E-08
23.67	133.70	132.08	2.4E-08
Average of last	**4**	**readings**	**2.4E-08**

717 S.E. 6th St, Des Moines, IA 50309 (515) 282-8818 fax: (515) 282-8741 www.teamservices.com staff@teamservices.com
Des Moines ▪ Omaha ▪ Fort Dodge ▪ Spirit Lake ▪ Mason City ▪ Cedar Rapids ▪ Waterloo ▪ Davenport ▪ Dubuque

PERMEABILITY TEST RESULTS
Falling Head

Project Name: 2024 City of Ames Ash Pond Closure
Project No.: 2-9571
Sample: ST-3 **Date Received:** 9/5/2024
Sample Location: 0
Test Started: 9/5/2024 **Test Competed:** 9/13/2024
Test Procedure: ASTM D 5084 - 03 Falling Head Test (Method B)
Sample Description: CL with sand trace coarse sand Lt Brown trace Gray

INITIAL SAMPLE DATA

Wet Weight (g)	1372.7
Non-cut Height (in)	5.98
Diameter (in)	2.875
Moisture Content (%)	14.1
Dry Unit Weight (pcf)	118.0

FINAL SAMPLE DATA

Wet Weight (g)	1242.9
Final Cut Height (in)	5.39
Diameter (in)	2.875
Moisture Content (%)	14.6
Dry Unit Weight (pcf)	118.1

TEST DATA

Elapsed Time (hr)	Initial Head (in)	Final Head (in)	Coefficient of Permeability, k (cm/s)
17.75	133.70	122.20	2.3E-07
50.67	133.70	131.52	1.5E-08
22.33	133.70	132.70	1.5E-08
23.00	133.70	132.08	2.4E-08
24.17	133.70	131.95	2.5E-08
24.17	133.70	131.95	2.5E-08
23.67	133.70	132.08	2.4E-08
Average of last	**4**	**readings**	**2.4E-08**

717 S.E. 6th St, Des Moines, IA 50309 (515) 282-8818 fax: (515) 282-8741 www.teamservices.com staff@teamservices.com
Des Moines ▪ Omaha ▪ Fort Dodge ▪ Spirit Lake ▪ Mason City ▪ Cedar Rapids ▪ Waterloo ▪ Davenport ▪ Dubuque

PERMEABILITY TEST RESULTS
Falling Head

Project Name: 2024 Ames Ash Pond Closure
Project No.: 2-9571
Sample: ST-4 **Date Received:** 9/6/2024
Sample Location: 0
Test Started: 9/6/2024 **Test Competed:** 9/13/2024
Test Procedure: ASTM D 5084 - 03 Falling Head Test (Method B)
Sample Description: CL with sand trace coarse sand Lt Brown trace Gray

INITIAL SAMPLE DATA

Wet Weight (g)	1388.7
Non-cut Height (in)	5.90
Diameter (in)	2.875
Moisture Content (%)	13.3
Dry Unit Weight (pcf)	121.9

FINAL SAMPLE DATA

Wet Weight (g)	1261.1
Final Cut Height (in)	5.30
Diameter (in)	2.875
Moisture Content (%)	15.1
Dry Unit Weight (pcf)	121.3

TEST DATA

Elapsed Time (hr)	Initial Head (in)	Final Head (in)	Coefficient of Permeability, k (cm/s)
44.75	133.79	120.91	1.0E-07
22.33	133.79	132.23	2.4E-08
23.00	133.79	131.98	2.7E-08
24.17	133.79	131.85	2.7E-08
24.17	133.79	131.85	2.7E-08
23.67	133.79	131.91	2.7E-08
Average of last	**4**	**readings**	**2.7E-08**

717 S.E. 6th St, Des Moines, IA 50309 (515) 282-8818 fax: (515) 282-8741 www.teamservices.com staff@teamservices.com

Des Moines ▪ Omaha ▪ Fort Dodge ▪ Spirit Lake ▪ Mason City ▪ Cedar Rapids ▪ Waterloo ▪ Davenport ▪ Dubuque

PERMEABILITY TEST RESULTS
Falling Head

Project Name: 2024 Ames Ash Pond Closure
Project No.: 2-9571
Sample: ST-5 **Date Received:** 9/6/2024
Sample Location: 0
Test Started: 9/6/2024 **Test Competed:** 9/13/2024
Test Procedure: ASTM D 5084 - 03 Falling Head Test (Method B)
Sample Description: CL with sand trace coarse sand Lt Brown trace Gray

INITIAL SAMPLE DATA

Wet Weight (g)	1381.6
Non-cut Height (in)	5.96
Diameter (in)	2.875
Moisture Content (%)	13.5
Dry Unit Weight (pcf)	119.9

FINAL SAMPLE DATA

Wet Weight (g)	1250.9
Final Cut Height (in)	5.39
Diameter (in)	2.875
Moisture Content (%)	14.2
Dry Unit Weight (pcf)	119.3

TEST DATA

Elapsed Time (hr)	Initial Head (in)	Final Head (in)	Coefficient of Permeability, k (cm/s)
44.75	133.73	123.04	8.5E-08
22.33	133.73	132.10	2.5E-08
23.00	133.73	132.10	2.4E-08
24.17	133.73	131.98	2.5E-08
24.17	133.73	131.98	2.5E-08
23.67	133.73	132.10	2.4E-08
Average of last	**4**	**readings**	**2.4E-08**

717 S.E. 6th St, Des Moines, IA 50309 (515) 282-8818 fax: (515) 282-8741 www.teamservices.com staff@teamservices.com

Des Moines ▪ Omaha ▪ Fort Dodge ▪ Spirit Lake ▪ Mason City ▪ Cedar Rapids ▪ Waterloo ▪ Davenport ▪ Dubuque

E.6 – General Fill Representative Sample Test Results

MOISTURE - DENSITY RELATIONSHIP REPORT

(Proctor Test)

ASTM D 698-12 Method B Standard

PROJECT: **2024 City of Ames Ash Pond Closure**
Ames, IA

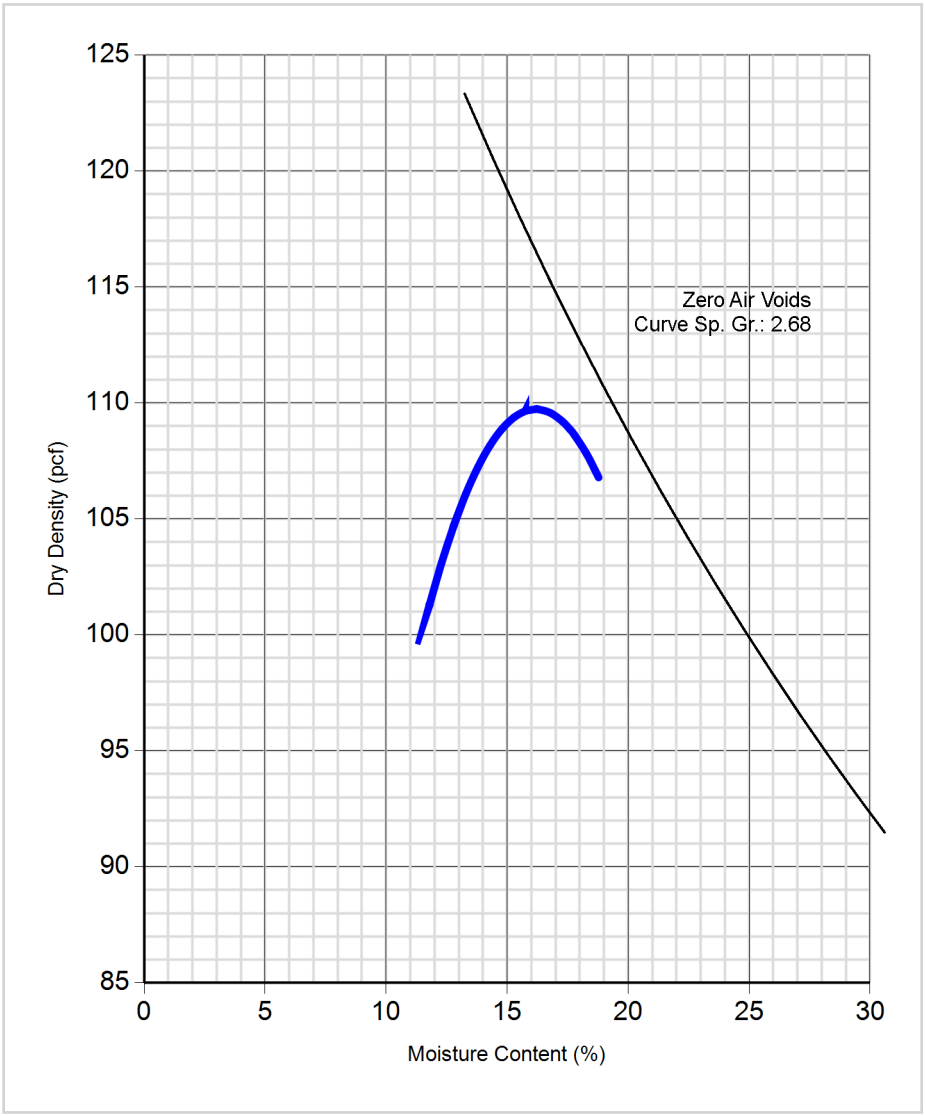

PROJECT NO: 2-9571

REPORT NO: 3-0

PROCTOR ID:	**6**

DATE RECEIVED: 06/18/2025

DATE TESTED: 06/22/2025

TESTED BY: JR

TEST RESULTS

MAXIMUM DRY DENSITY (pcf)
109.7

OPTIMUM MOISTURE (%)
16.2

Prep Method:: Moist

Rammer Type: Mechanical

Proctor points available upon request.

SOURCE: Onsite East Stockpile Topsoil

SAMPLE DESCRIPTION: Organic Lean CLAY, with sand, with gravel

Notes/Remarks:

APPROVED: *Andy Eisinger*

*Proctor reports shall not be reproduced, except in full, without our written permission.

TEAM Services, Inc.
717 S.E. 6th Street
Des Moines, IA 50309
515-282-8818
515-282-8741
www.teamservices.com
staff@teamservices.com

MOISTURE - DENSITY RELATIONSHIP REPORT

(Proctor Test)

ASTM D 698-12 Method B Standard

PROJECT: **2024 City of Ames Ash Pond Closure**
Ames, IA

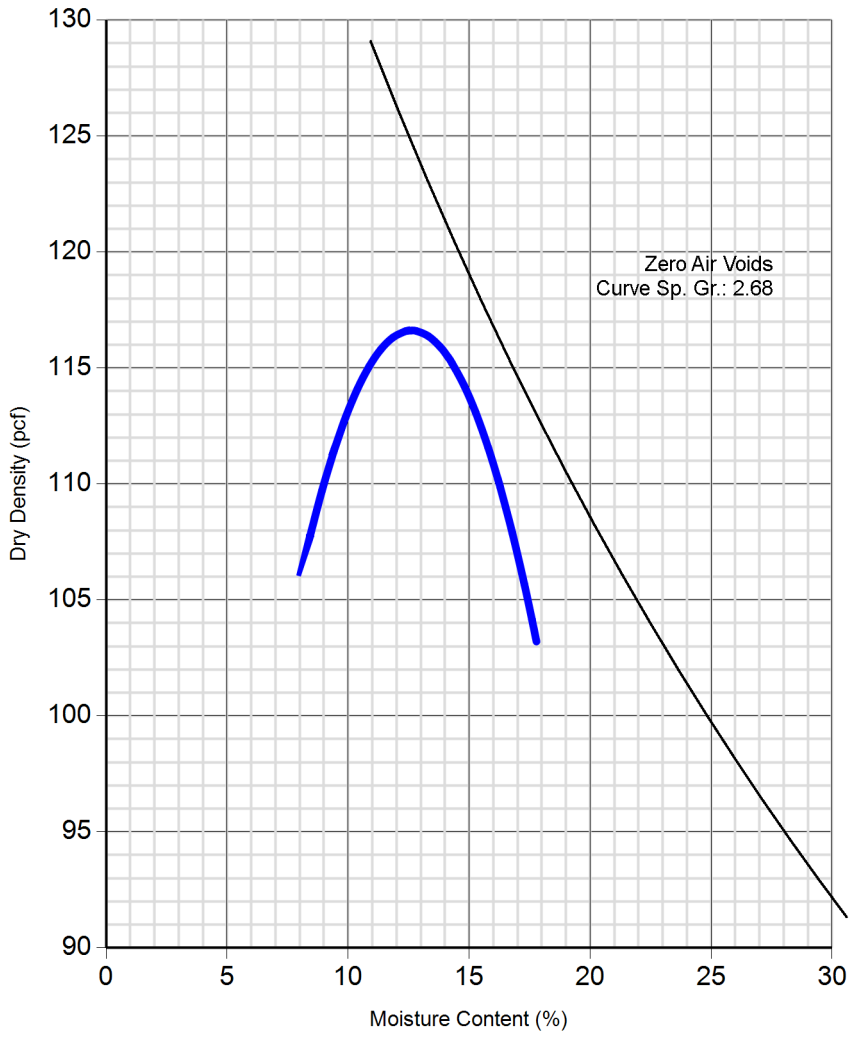

PROJECT NO: 2-9571

REPORT NO: 3-0

PROCTOR ID:	**7**

DATE RECEIVED: 06/18/2025

DATE TESTED: 06/22/2025

TESTED BY: JR

TEST RESULTS

MAXIMUM DRY DENSITY (pcf)

116.6

OPTIMUM MOISTURE (%)

12.6

Prep Method:: Moist

Rammer Type: Mechanical

Proctor points available upon request.

SOURCE: Offsite City Borrow

SAMPLE DESCRIPTION: Lean CLAY, with sand, with gravel, medium-dark brown

Notes/Remarks:

APPROVED: *Andy Eisinger*

*Proctor reports shall not be reproduced, except in full, without our written permission.

TEAM Services, Inc.
717 S.E. 6th Street
Des Moines, IA 50309
515-282-8818
515-282-8741
www.teamservices.com
staff@teamservices.com

MOISTURE - DENSITY RELATIONSHIP REPORT

(Proctor Test)

ASTM D 698-12 Method B Standard

PROJECT: **2024 City of Ames Ash Pond Closure**
Ames, IA

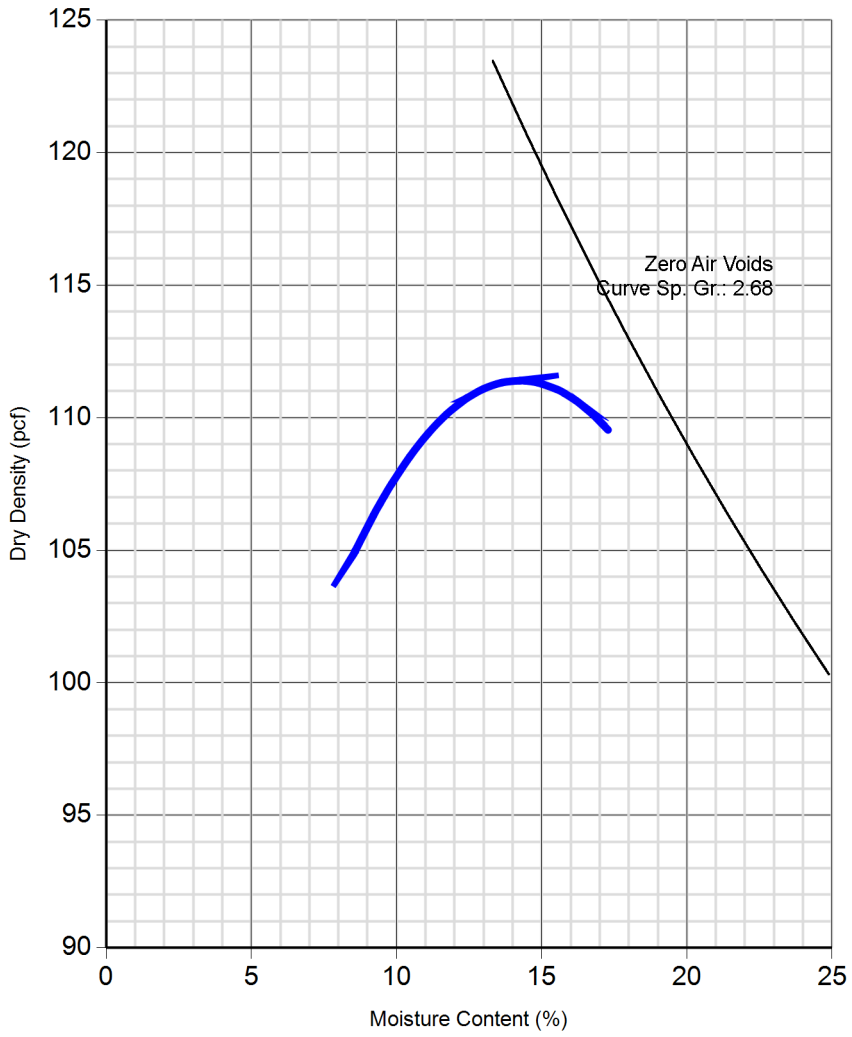

PROJECT NO: 2-9571

REPORT NO: 3-0

PROCTOR ID:	**8**

DATE RECEIVED: 06/18/2025

DATE TESTED: 06/22/2025

TESTED BY: JR

TEST RESULTS

MAXIMUM DRY DENSITY (pcf)
111.4

OPTIMUM MOISTURE (%)
14.2

Prep Method:: Moist

Rammer Type: Mechanical

Proctor points available upon request.

SOURCE: Onsite West Stockpile

SAMPLE DESCRIPTION: Lean CLAY, with sand, with gravel, medium brown

Notes/Remarks:

APPROVED: *Andy Eisinger*

*Proctor reports shall not be reproduced, except in full, without our written permission.

TEAM Services, Inc.
717 S.E. 6th Street
Des Moines, IA 50309
515-282-8818
515-282-8741
www.teamservices.com
staff@teamservices.com

MOISTURE - DENSITY RELATIONSHIP REPORT

(Proctor Test)

ASTM D 698-12 Method A Standard

PROJECT: **2024 City of Ames Ash Pond Closure**
Ames, IA

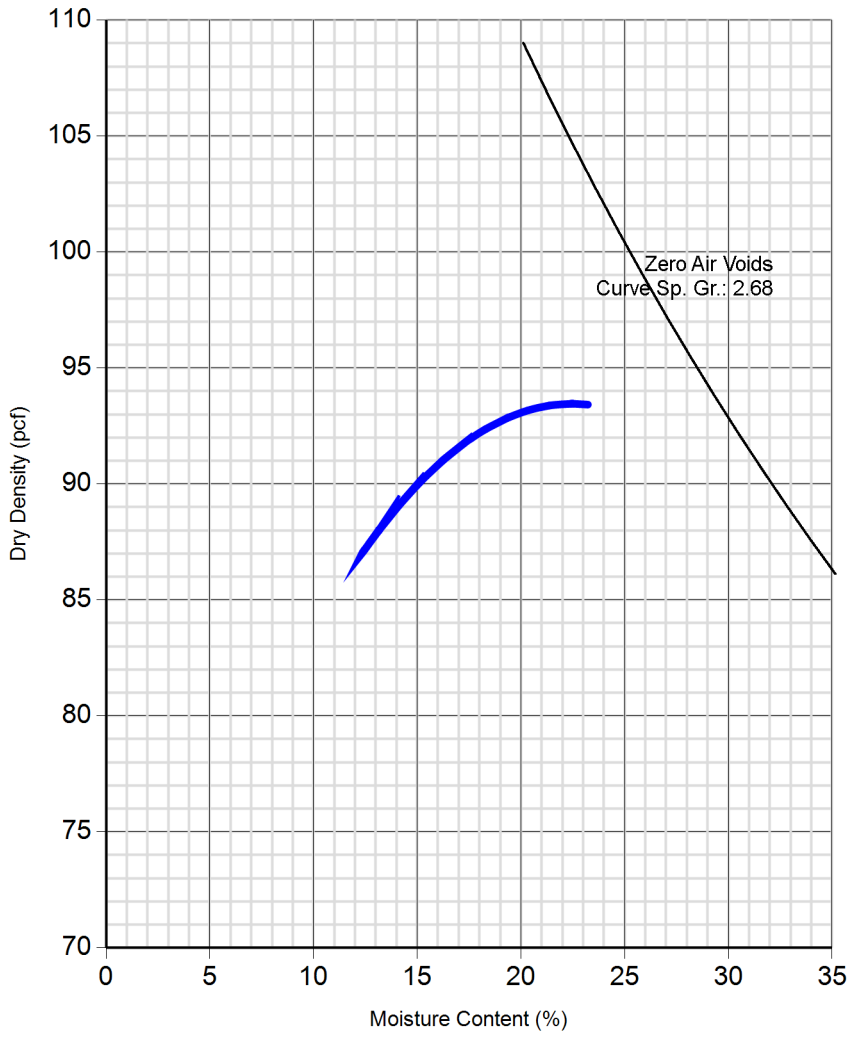

PROJECT NO: 2-9571

REPORT NO: 3-0

PROCTOR ID:	9

DATE RECEIVED: 06/18/2025

DATE TESTED: 06/22/2025

TESTED BY: JR

TEST RESULTS

MAXIMUM DRY DENSITY (pcf)
93.5

OPTIMUM MOISTURE (%)
22.5

Prep Method:: Moist

Rammer Type: Mechanical

Proctor points available upon request.

SOURCE: Offsite Cover Soil Borrow

SAMPLE DESCRIPTION: Organic Lean CLAY, dark brown (black)

Notes/Remarks:

APPROVED: *Andy Eisinger*

*Proctor reports shall not be reproduced, except in full, without our written permission.

TEAM Services, Inc.
717 S.E. 6th Street
Des Moines, IA 50309
515-282-8818
515-282-8741
www.teamservices.com
staff@teamservices.com

Appendix F

Granular Material Laboratory Test Results

Project: City of Ames Ash Pond Closure
SCS Project #: 27219356.02

Section: 33 22 00
Title: Submittal #S13 – Sand Bedding

Submittal Review

[X] Conforms as submitted

[ ] Conforms as noted – Resubmittal is:

- [ ] Not required
- [ ] Required
- [ ] Noted portions only
- [ ] For record only

[ ] Does not conform

[ ] Not required by contract documents

[ ] For information only

Corrections or comments made on submittals during this review do not relieve the contractor from compliance with requirements of the drawings and specifications. This check is only for review of general conformance with the design concept of the project and general compliance with the information given in the contract documents. The contractor is responsible for; confirming and correlating all quantities and dimensions; selecting fabrication processes and techniques of construction; coordinating contractor's work with that of all other trades; and performing contractor's work in a safe and satisfactory manner.

Comments:

Reviewed By: Matt Kuhlenengel	Date: 6/4/2024
SCS QC Review By: Deb Nelson	Date: 6/4/2024

G:\Project\27219356.02\Data and Calculations\Submittals\S13 - Sand Bedding\SCS Review 13-Sand Bedding_240604_.docx

SHOP DRAWING TRANSMITTAL

DATE: 6/4/2024

Project: Ames Ash Pond Closure & RDF Ash Pond Construction

Specification Section Number: 33 22 00 Earth work

Transmittal Number: 13

1st Submittal X or Resubmital _____

Contract Item	Description of Material	Manufacturer	Drawing or Data No.	Action Taken
8	Sand Bedding	Hallet		

As stated in the Contract Documents, the undersigned CONTRACTOR's submission of these Shop Drawings or samples shall constitute a representative to the OWNER and the ENGINEER that the CONTRACTOR has either determined and verified all quantities, dimensions, field construction criteria, materials, catalogue numbers and similar data or he assumes full responsibility for doing so, and that he has reviewed and coordinated each Shop Drawing or sample with the requirements of the work and the Contract Documents and he represents to the OWNER and the ENGINEER that item(s) described by these Shop Drawings do comply with the requirements of the Contract Documents. The undersigned Contractor certifies that the equipment included in this submittal complies with the latest requirements of the Occupational Health and Safety Act of 1970 including any standards or regulations established by the U.S. Secretary of Labor in administration of said act, and the Iowa Occupational Safety and Health Statutes.

6/4/2024

Supplier/Subcontractor:
Hallett Materials - Ames South

(Autorized Signature of Contractor) **(Date)**

JB Holland Construction, Inc.

2191 State Hwy 52, Decorah, IA 52101

FOR ENGINEER'S USE

n as designated above in accordance with the following legend:

A- No Exception Taken
B- Make Corrections Noted & Resubmit
C- Revise & Resubmit
D- Rejected
E- Submit Specified Item

BY: _____

DATE: _____

Ames South
2100 South Dayton Ave
Ames, IA 50010
515-321-9171

Basic Quality Statistical Summary Report

Plant	182_01103-Ames South
Product	2101-Concrete Sand
Specification	IADOT 1
Period	05/12/2024 - 05/18/2024

Sieve/Test	Tests	Average	Target	Specification
3/8" (9.5mm)	1	100.0	≥100	100-100
#4 (4.75mm)	1	98.0	90-100	90-100
#8 (2.36mm)	1	87.5	70-100	70-100
#16 (1.18mm)	1	68.9		
#30 (.6mm)	1	40.4	20-45	10-60
#50 (.3mm)	1	11.0		
#100 (.15mm)	1	0.4		
#200 (75µm)	1	0.12	0-1	0-1.5
Pan	1	0.00		
Total Deleterious	1	0.3	0-0.8	0-2
FM	1	2.94	2.99	2.79-3.24
Total Moisture	1	3.01		

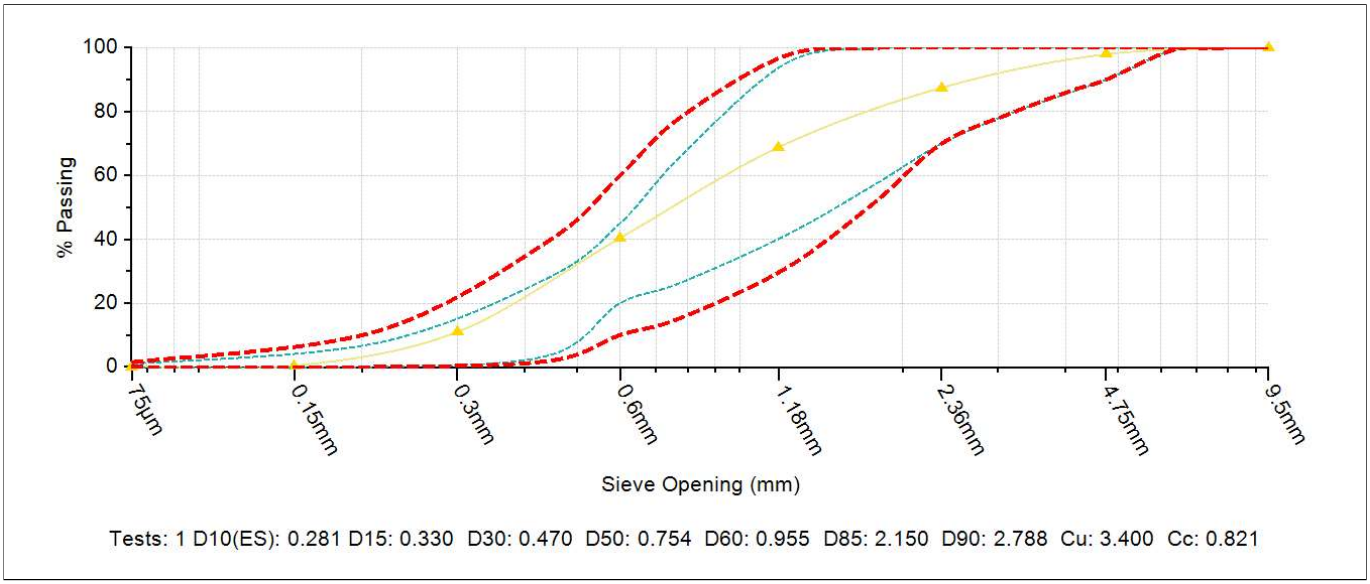

Tests: 1 D10(ES): 0.281 D15: 0.330 D30: 0.470 D50: 0.754 D60: 0.955 D85: 2.150 D90: 2.788 Cu: 3.400 Cc: 0.821

Query

Query Selections
Date Created 05/20/2024
Date Range 05/12/2024 - 05/18/2024
Plant Ames South
Sample Type Stockpile

Project: City of Ames Ash Pond Closure
SCS Project #: 27219356.02

Section: 33 22 00
Title: Submittal #S14 – Granular Aggregates

Submittal Review

- [X] Conforms as submitted
- [ ] Conforms as noted – Resubmittal is:
  - [ ] Not required
  - [ ] Required
  - [ ] Noted portions only
  - [ ] For record only
- [ ] Does not conform
- [ ] Not required by contract documents
- [ ] For information only

Corrections or comments made on submittals during this review do not relieve the contractor from compliance with requirements of the drawings and specifications. This check is only for review of general conformance with the design concept of the project and general compliance with the information given in the contract documents. The contractor is responsible for; confirming and correlating all quantities and dimensions; selecting fabrication processes and techniques of construction; coordinating contractor's work with that of all other trades; and performing contractor's work in a safe and satisfactory manner.

Comments:

Reviewed By: Matt Kuhlenengel	Date: 6/7/2024
SCS QC Review By: Deb Nelson	Date: 6/10/2024

G:\Project\27219356.02\Data and Calculations\Submittals\S14 - Granular Aggreagates\SCS Review S14-Granular Aggregates_240607_.docx

SHOP DRAWING TRANSMITTAL

DATE: 6/4/2024

Project: Ames Ash Pond Closure & RDF Ash Pond Construction

Specification Section Number: 33 22 00 Earth work

Transmittal Number: 14

1st Submittal X or Resubmital _____

Contract Item	Description of Material	Manufacturer	Drawing or Data No.	Action Taken
8,10 & 41	Drainage Agg	Martin Marietta		
33	subgrade agg	Martin Marietta		
33	surface agg	Martin Marietta		
44	Erosion Stone	Martin Marietta		

As stated in the Contract Documents, the undersigned CONTRACTOR's submission of these Shop Drawings or samples shall constitute a representative to the OWNER and the ENGINEER that the CONTRACTOR has either determined and verified all quantities, dimensions, field construction criteria, materials, catalogue numbers and similar data or he assumes full responsibility for doing so, and that he has reviewed and coordinated each Shop Drawing or sample with the requirements of the work and the Contract Documents and he represents to the OWNER and the ENGINEER that item(s) described by these Shop Drawings do comply with the requirements of the Contract Documents. The undersigned Contractor certifies that the equipment included in this submittal complies with the latest requirements of the Occupational Health and Safety Act of 1970 including any standards or regulations established by the U.S. Secretary of Labor in administration of said act, and the Iowa Occupational Safety and Health Statutes.

6/4/2024

Supplier/Subcontractor: Hallett Materials - Ames South

(Autorized Signature of Contractor) **(Date)**

JB Holland Construction, Inc.

2191 State Hwy 52, Decorah, IA 52101

FOR ENGINEER'S USE

n as designated above in accordance with the following legend:

A- No Exception Taken

B- Make Corrections Noted & Resubmit

C- Revise & Resubmit

D- Rejected

E- Submit Specified Item

BY: _____

DATE: _____

Surface Course

Product Comparison Report

Subgrade aggregate

Drainage Aggregate

Period: 06/04/2023 - 06/04/2024

Plant	26304-Ames Mine (IDOT A85006)	26304-Ames Mine (IDOT A85006)	26304-Ames Mine (IDOT A85006)	26304-Ames Mine (IDOT A85006)	26304-Ames Mine (IDOT A85006)	26304-Ames Mine (IDOT A85006)	26304-Ames Mine (IDOT A85006)
Product	0612-1" Road Stone	0732-Class A Roadstone	0838-Porous Backfill	0944-Manufactured Sand	0965-3/8" Screenings	1205-Modified Subbase	3803-1" Pipe Bedding Portable Plant
Sieve/Test	**Average**	**Average**	**Average**	**Average**	**Average**	**Average**	**Average**
1 1/2" (37.5mm)	100.0					100.0	100.0
1" (25mm)	98.8	100.0				97.8	97.8
3/4" (19mm)	88.2	99.1	100.0			80.1	67.8
1/2" (12.5mm)	68.5	78.6	99.8		100.0	60.7	30.2
3/8" (9.5mm)	57.6	63.2	93.5	100.0	99.9	53.9	14.6
#4 (4.75mm)	36.8	39.4	29.9	95.3	78.2	35.0	1.7
#8 (2.36mm)	23.5	24.7	3.9	62.7	49.9	20.4	0.9
#16 (1.18mm)	16.5	17.1		34.5	33.1	13.8	
#30 (.6mm)	12.2	13.1		17.7	23.8	10.2	
#50 (.3mm)	9.6	10.6		6.7	18.1	8.0	
#100 (.15mm)	8.1	9.0		2.4	14.7	6.7	
#200 (75µm)	6.93	7.91		1.44	12.28	5.70	
Pan	0.00	0.00	0.00	0.00	0.00	0.00	0.00

Martin Marietta Aggregates

KEN BAETH - OFFICE (515) 254-0030 FAX (515) 254-0035 CELLULAR (515) 689-1540
E-MAIL KEN.BAETH@MARTINMARIETTA.COM
11252 AURORA AVE DES MOINES, IA 50322

Date: 1/1/2024

To: Contractors / Engineers

From: Ken Baeth

Re: Erosion Stone Certification - Ames Mine

This letter is certification that the Erosion Stone produced at our Ames Mine meets IDOT Section 4130.03 Erosion Stone. This material is sized 4"- 8" with 6" nominal size.

Sincerely,

Ken Baeth
Senior Sales Representative

Appendix G

Geosynthetic Materials Manufacturer's Quality Control Data

G.1 – Geomembrane

Project: City of Ames Ash Pond Closure
SCS Project #: 27219356.02

Section: 32 23 40
Title: Submittal #S5A – Geomembrane, Roll Certification (Manufacturer Testing) and Panel Layout

Submittal Review

- [ ] Conforms as submitted
- [X] Conforms as noted – Resubmittal is:
  - [X] Not required
  - [ ] Noted portions only
  - [ ] Required
  - [ ] For record only
- [ ] Does not conform
- [ ] Not required by contract documents
- [ ] For information only

Corrections or comments made on submittals during this review do not relieve the contractor from compliance with requirements of the drawings and specifications. This check is only for review of general conformance with the design concept of the project and general compliance with the information given in the contract documents. The contractor is responsible for; confirming and correlating all quantities and dimensions; selecting fabrication processes and techniques of construction; coordinating contractor's work with that of all other trades; and performing contractor's work in a safe and satisfactory manner.

Comments:

- This completes manufacturer testing/roll certifications. Conformance testing (underway) results are still needed prior to shipment.

Reviewed By: Matt Kuhlenengel	Date: 3/25/2025
SCS QC Review By: Marty Sturzl	Date: 3/25/2025

G:\Project\27219356.02\Data and Calculations\CQA Documents\Submittals\S5 - Geomembrane\SCS Review S5A-Geomembrane_250325_.docx

SHOP DRAWING TRANSMITTAL

DATE: 3/25/2025

Project: Ames Ash Pond Closure & RDF Ash Pond Construction

Specification Section Number: 32 23 40 Geomembrane

Transmittal Number: 5A

1st Submittal X or Resubmital _____

Contract Item	Description of Material	Manufacturer	Drawing or Data No.	Action Taken
37	Geomembrane liner	Solmax		
	- Roll Certifications			
	- Panel layout			

As stated in the Contract Documents, the undersigned CONTRACTOR's submission of these Shop Drawings or samples shall constitute a representative to the OWNER and the ENGINEER that the CONTRACTOR has either determined and verified all quantities, dimensions, field construction criteria, materials, catalogue numbers and similar data or he assumes full responsibility for doing so, and that he has reviewed and coordinated each Shop Drawing or sample with the requirements of the work and the Contract Documents and he represents to the OWNER and the ENGINEER that item(s) described by these Shop Drawings do comply with the requirements of the Contract Documents. The undersigned Contractor certifies that the equipment included in this submittal complies with the latest requirements of the Occupational Health and Safety Act of 1970 including any standards or regulations established by the U.S. Secretary of Labor in administration of said act, and the Iowa Occupational Safety and Health Statutes.

3/25/2025

(Autorized Signature of Contractor) **(Date)**

JB Holland Construction, Inc.

2191 State Hwy 52, Decorah, IA 52101

Supplier/Subcontractor:

Clean Air and Water Systems

123 Elm Street

Dousman, Wi 53118

FOR ENGINEER'S USE

n as designated above in accordance with the following legend:

A- No Exception Taken

B- Make Corrections Noted & Resubmit

C- Revise & Resubmit

D- Rejected

E- Submit Specified Item

BY: _____

DATE: _____

clean air and water systems, llc

"You create it, we'll contain it"

Ames Ash Pond Closure

SUBMITTAL PACKAGE TABLE OF CONTENTS

SECTION - 32 23 40 - GEOMEMBRANE

ITEM # - SPEC I.D.	SUBMITTAL DESCRIPTION	DATE SUBMITTED AND/OR WHEN AVAILABLE	CLARIFICATIONS
1.4.A	Product Data Sheet	Approved	
1.4.B	Manufacturer Profile	Approved	
1.4.B	Installer Qualifications	Approved	
1.4.B	Manufacturer Quality Control Manual	Approved	
1.4.B	Installation Manual	Approved	
1.4.B	Material Roll Certifications	**3/24/2025**	
1.4.B	Proposed Panel Layout	**3/24/2025**	
1.4.B	Crew Resume	Prior to Installation	
1.4.B	Warranties	Samples - Approved, Final After Installation	
1.4.B	Closeout Paperwork	After Installation	

Submitted By: **Luke Krabel**
Email: lkrabel@caawsystems.com
Office Phone: **(402) 414-4558**
Cell Phone: **(402) 981-2504**

Signed: Luke D Krabel

Submittal Cover Sheet

SECTION - 32 23 40 - GEOMEMBRANE

ITEM # - SPEC I.D.

1.4.B

SUBMITTAL DESCRIPTION

Material Roll Certifications

DATE SUBMITTED AND/OR WHEN AVAILABLE

3/24/2025

SOLMAX

LIST OF GEOMEMBRANE ROLLS



PROJECT NUMBER: 24048

SALES ORDER: SO-097077

PACKING SLIP NUMBER: Pre-SO-097077-1

PROJECT NAME : AMES ASH POND CLOSURE

ROLL NUMBER	RESIN LOT NUMBER	MANUFACT. DATE	RESIN MELT INDEX 190/2.16 g/10 min D1238	RESIN DENSITY g/cc D1505	OIT min D8117	HPOIT min D5885	ESCR SP-NCTL hours D5397
Product Code : 1101951							
GSE LL 40mil/1.00mm G Black RT			**1.0**	**< 0.926**	**100**		
0105-216930	24BB573	2024-06-11	0.85	0.916	180		
0105-220465	24KB618	2025-03-13	0.86	0.917	184		
0105-220466	24KB618	2025-03-13	0.86	0.917	184		
0105-220467	24KB618	2025-03-13	0.86	0.917	184		
0105-220468	24KB618	2025-03-13	0.86	0.917	184		
0105-220469	24KB618	2025-03-14	0.86	0.917	184		
0105-220470	24KB618	2025-03-14	0.86	0.917	184		
0105-220471	24KB618	2025-03-14	0.86	0.917	184		
0105-220472	24KB618	2025-03-14	0.86	0.917	184		
0105-220473	24KB618	2025-03-14	0.86	0.917	184		
0105-220474	24KB618	2025-03-14	0.86	0.917	184		
0105-220475	24KB618	2025-03-14	0.86	0.917	184		
0105-220476	24KB618	2025-03-14	0.86	0.917	184		

Solmax is not a design professional and has not performed any design services to determine if Solmax's goods comply with any project plans or specifications, or with the application or use of Solmax's goods to any particular system, project, purpose, installation or specification.

Solmax Geosynthetics LLC
19103 GUNDLE RD,, HOUSTON, TX, UNITED STATES, 77073

SOLMAX.COM

SOLMAX

LIST OF GEOMEMBRANE ROLLS

SOLMAX Roberto Garcia APPROVED QUALITY ASSURANCE

PROJECT NUMBER: 24048

SALES ORDER: SO-097077

PACKING SLIP NUMBER: Pre-SO-097077-1

PROJECT NAME : AMES ASH POND CLOSURE

0105-220477	24KB618	2025-03-14	0.86	0.917	184		

QUANTITY (ROLLS): 14

Solmax is not a design professional and has not performed any design services to determine if Solmax's goods comply with any project plans or specifications, or with the application or use of Solmax's goods to any particular system, project, purpose, installation or specification.

Solmax Geosynthetics LLC
19103 GUNDLE RD,, HOUSTON, TX, UNITED STATES, 77073

SOLMAX.COM

SOLMAX

MANUFACTURING QUALITY CONTROL

SOLMAX Roberto Garcia APPROVED QUALITY ASSURANCE

TEST RESULTS

PROJECT NUMBER: 24048

SALES ORDER: SO-097077

PACKING SLIP NUMBER: Pre-SO-097077-1

PROJECT NAME : AMES ASH POND CLOSURE

PRODUCT: 1101951

GSE LL 40mil/1.00mm G Black RT

Properties	Thickness ave/min.	GeoM Density	Carbon Black Content	Carbon Black Dispersion	Tensile Yield Strength	Tensile Yield Elong.	Tensile Break Strength	Tensile Break Elong.	Tear Resist.	Puncture Resist.	Dimension Stability	Asperity Height In/Out
Unit	mils	g/cc	%	Cat 1 and 2	ppi	%	ppi	%	lbs	lbs	%	mils
Test Method	D5994	D792	D4218	D5596	D6693				D1004	D4833	D1204	D7466
Frequency	Each roll	Every 10 rolls	Every 2 rolls	Every 10 rolls	Every 2 rolls				Every 5 rolls	Every 5 rolls		Every roll
Specification	38.0 / 34.0	≤ 0.939	2.0 - 3.0	Cat. 1 & Cat. 2			100	250	25	56		20 / 20
0105-216930 MD	38.2 / 38.0	0.930	2.23	10/10 views			144	586	33	87		20.2 / 22.4
XD							125	540	30			
0105-220465 MD	44.7 / 40.0	0.935	2.61	10/10 views			148	596	34	95		24.1 / 25.7
XD							127	544	34			
0105-220466 MD	45.7 / 42.0	0.935	2.61	10/10 views			148	596	34	95		24.5 / 23.8
XD							127	544	34			
0105-220467 MD	44.3 / 41.0	0.935	2.49	10/10 views			156	571	34	95		25.0 / 22.0
XD							139	549	34			
0105-220468 MD	47.3 / 45.0	0.935	2.49	10/10 views			156	571	34	95		24.5 / 22.4
XD							139	549	34			
0105-220469 MD	44.4 / 39.0	0.935	2.49	10/10 views			179	645	34	95		22.8 / 23.6
XD							137	540	34			
0105-220470 MD	44.3 / 39.0	0.935	2.49	10/10 views			179	645	36	93		25.7 / 23.1
XD							137	540	34			
0105-220471 MD	44.8 / 41.6	0.935	2.62	10/10 views			162	620	36	93		25.5 / 22.5
XD							122	466	34			
0105-220472 MD	45.6 / 40.8	0.935	2.62	10/10 views			162	620	36	93		24.5 / 24.1
XD							122	466	34			
0105-220473 MD	41.9 / 39.5	0.935	2.39	10/10 views			160	618	36	93		22.8 / 21.0
XD							128	535	34			
0105-220474 MD	43.6 / 34.2	0.935	2.39	10/10 views			160	618	36	93		21.7 / 21.0
XD							128	535	34			
0105-220475 MD	41.5 / 37.2	0.933	2.60	10/10 views			168	597	37	101		21.4 / 22.0
XD							129	511	37			
0105-220476 MD	42.4 / 39.6	0.933	2.60	10/10 views			168	597	37	101		24.0 / 23.3
XD							129	511	37			

Solmax is not a design professional and has not performed any design services to determine if Solmax's goods comply with any project plans or specifications, or with the application or use of Solmax's goods to any particular system, project, purpose, installation or specification.

Solmax Geosynthetics LLC
19103 GUNDLE RD,, HOUSTON, TX, UNITED STATES, 77073

SOLMAX.COM

SOLMAX

MANUFACTURING QUALITY CONTROL

TEST RESULTS

PROJECT NUMBER: 24048

SALES ORDER: SO-097077

PACKING SLIP NUMBER: Pre-SO-097077-1

PROJECT NAME : AMES ASH POND CLOSURE

0105-220477	**MD**	43.0 / 41.5	0.933	2.65	10/10 views			155	593	37	101		25.9 / 24.6
	XD							110	455	37			

Solmax is not a design professional and has not performed any design services to determine if Solmax's goods comply with any project plans or specifications, or with the application or use of Solmax's goods to any particular system, project, purpose, installation or specification.

Solmax Geosynthetics LLC
19103 GUNDLE RD,, HOUSTON, TX, UNITED STATES, 77073

Formosa Plastics

FORMOSA PLASTICS CORPORATION, TEXAS
201 FORMOSA DRIVE
PO BOX 700
POINT COMFORT TX 77978
PHONE:(888)FPCUSA3

Certificate of Analysis

(CONFIDENTIAL)

CUSTOMER:SOLMAX GEOSYNTHETICS LLC
19103 GUNDLE ROAD

HOUSTON TX 77073
PRODUCT :L91507H
RAILCAR FPAX200455
CLEANING/INSPECTION NO: 200455022524

S/O NO : J43A147
CUSTOMER PO : PO-610559
DATE SHIPPED: 4/01/24
LOT NO : 24BB573
WEIGHT (LB) : 184,700.00
CUSTID:FT05970 SPIDS5

TEST ITEM	REFERENCE METHOD	TEST VALUE
Melt Index, g/10min	ASTM D1238	.85
Density, g/cm3	ASTM D1505	.9162

Linda Kao

QC SUPERVISOR: LINDA KAO

Formosa Plastics

FORMOSA PLASTICS CORPORATION, TEXAS
201 FORMOSA DRIVE
PO BOX 700
POINT COMFORT TX 77978
PHONE:(888)FPCUSA3

Certificate of Analysis

(CONFIDENTIAL)

CUSTOMER:SOLMAX GEOSYNTHETICS LLC
19103 GUNDLE ROAD
HOUSTON TX 77073
PRODUCT :FORMOLENE L91507H
RAILCAR AOKX090161
CLEANING/INSPECTION NO: 090161112324

S/O NO : J51A148
CUSTOMER PO : PO-613742
DATE SHIPPED: 2/19/25
LOT NO : 24KB618
WEIGHT (LB) : 186,600.00
CUSTID:FT05970 SPIDS3

TEST ITEM	REFERENCE METHOD	TEST VALUE
Melt Index, g/10min	ASTM D1238	.86
Density, g/cm3	ASTM D1505	.9172

Linda Kao

QC SUPERVISOR: LINDA KAO

Submittal Cover Sheet

SECTION - 32 23 40 - GEOMEMBRANE

ITEM # - SPEC I.D.

1.4.B

SUBMITTAL DESCRIPTION

Proposed Panel Layout

DATE SUBMITTED AND/OR WHEN AVAILABLE

3/24/2025

NORTH

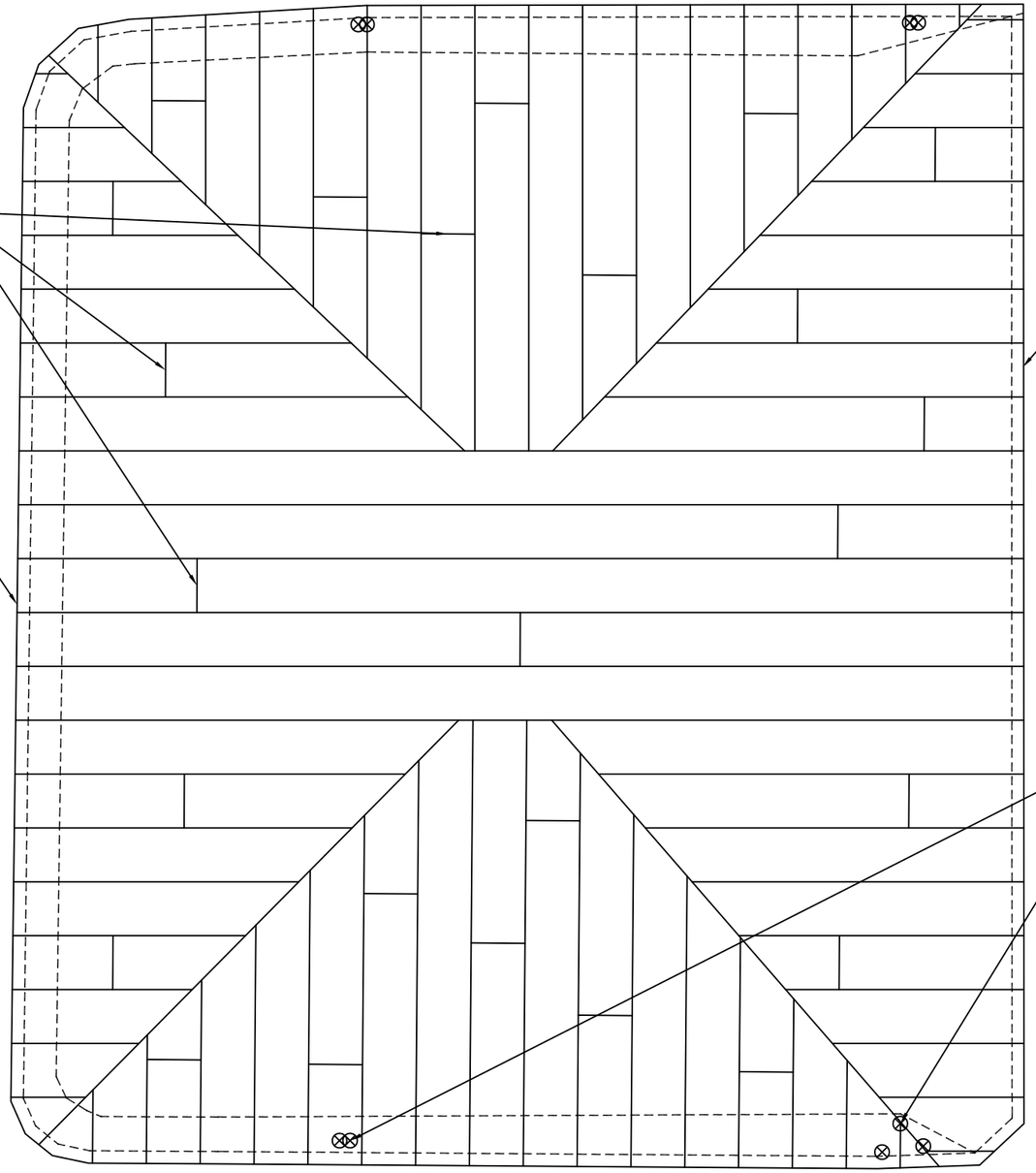

LINER ROLL END SEAMS PLACED AS NEEDED. ACTUAL SIZE, LOCATION, AND NUMBER TO BE FIELD DETERMINED AS INSTALLATION PROGRESSES

LINER TERMINATION ALONG NORTH, WEST, AND SOUTH EDGES IN ANCHOR TRENCH PER DETAIL 1, DRAWING NO. C5.4 OF THE PROJECT DRAWINGS

LINER TERMINATION ON SEPARATION BERM ALONG EAST EDGE IN ANCHOR TRENCH PER DETAIL 2, DRAWING NO. C5.4 OF THE PROJECT DRAWINGS

GEOMEMBRANE LINER PIPE BOOT AROUND PENETRATIONS PER DETAIL 1, DRAWING NO. C5.7 OF THE PROJECT DRAWINGS

LEGEND

- CLOSURE OUTLINE
- PANEL EDGE / FIELD SEAM
- ⊗ GEOMEMBRANE PIPE BOOT

SCALE

0 30 60

GENERAL NOTES:

A. PANEL LAYOUT SHOWN IS FOR SCHEMATIC PURPOSE ONLY. ACTUAL LOCATION, SIZE AND NUMBER TO BE DETERMINED IN THE FIELD AS INSTALLATION PROCEEDS.

DRAWN BY L.K.			
SCALE 1" = 60'			
DATE 3/24/25			
	#	REVISIONS	DATE

caaw
clean air and water systems
WWW.CAAWSYSTEMS.COM
123 ELM STREET PO BOX 337
DOUSMAN, WI 53118
262-965-4366

PROJECT NAME:
AMES ASH POND CLOSURE

DRAWING NAME:
PROPOSED GEOMEMBRANE PANEL LAYOUT

LOCATION:
AMES, IOWA

DRAWING NUMBER: P-1

JOB#:

FILENAME: AMES ASH

G.2 – Geocomposite

Project: City of Ames Ash Pond Closure
SCS Project #: 27219356.02

Section: 32 27 75
Title: Submittal #S4A – Geocomposite, Roll Certification (Manufacturer Testing)

Submittal Review

- [ ] Conforms as submitted
- [X] Conforms as noted – Resubmittal is:
  - [X] Not required
  - [ ] Required
  - [ ] Noted portions only
  - [ ] For record only
- [ ] Does not conform
- [ ] Not required by contract documents
- [ ] For information only

Corrections or comments made on submittals during this review do not relieve the contractor from compliance with requirements of the drawings and specifications. This check is only for review of general conformance with the design concept of the project and general compliance with the information given in the contract documents. The contractor is responsible for; confirming and correlating all quantities and dimensions; selecting fabrication processes and techniques of construction; coordinating contractor's work with that of all other trades; and performing contractor's work in a safe and satisfactory manner.

Comments:

- The transmissivity rates stated are higher than the conformance testing values. Note this for future use of geocomposite.

Reviewed By: Matt Kuhlenengel	Date: 3/25/2025
SCS QC Review By: Marty Sturzl	Date: 3/25/2025

G:\Project\27219356.02\Data and Calculations\CQA Documents\Submittals\S4 - Geocomposite\SCS Review S4A-Geocomposite_250325_.docx

SHOP DRAWING TRANSMITTAL

DATE: 3/25/2025

Project: Ames Ash Pond Closure & RDF Ash Pond Construction

Specification Section Number: 32 27 75 Geocomposite

Transmittal Number: 4A

1st Submittal X or Resubmital _____

Contract Item	Description of Material	Manufacturer	Drawing or Data No.	Action Taken
38	Drainage Geocomposite	Solmax		
	-Roll Cert			

As stated in the Contract Documents, the undersigned CONTRACTOR's submission of these Shop Drawings or samples shall constitute a representative to the OWNER and the ENGINEER that the CONTRACTOR has either determined and verified all quantities, dimensions, field construction criteria, materials, catalogue numbers and similar data or he assumes full responsibility for doing so, and that he has reviewed and coordinated each Shop Drawing or sample with the requirements of the work and the Contract Documents and he represents to the OWNER and the ENGINEER that item(s) described by these Shop Drawings do comply with the requirements of the Contract Documents. The undersigned Contractor certifies that the equipment included in this submittal complies with the latest requirements of the Occupational Health and Safety Act of 1970 including any standards or regulations established by the U.S. Secretary of Labor in administration of said act, and the Iowa Occupational Safety and Health Statutes.

3/25/2025

(Autorized Signature of Contractor) **(Date)**

JB Holland Construction, Inc.

2191 State Hwy 52, Decorah, IA 52101

Supplier/Subcontractor:
Clean Air and Water Systems
123 Elm Street
Dousman, Wi 53118

FOR ENGINEER'S USE

n as designated above in accordance with the following legend:

A- No Exception Taken
B- Make Corrections Noted & Resubmit
C- Revise & Resubmit
D- Rejected
E- Submit Specified Item

BY: _____

DATE: _____

clean air and water systems, llc

"You create it, we'll contain it"

Ames Ash Pond Closure

SUBMITTAL PACKAGE TABLE OF CONTENTS

SECTION 32 27 75 - GEONET GEOCOMPOSITE

ITEM # - SPEC I.D.	SUBMITTAL DESCRIPTION	DATE SUBMITTED AND/OR WHEN AVAILABLE	CLARIFICATIONS
1.3.A	Product Data Sheet	Approved	
1.3.A	Manufacturer Quality Control Manual	Approved	
1.3.A	Installation Manual	Approved	
1.3.A	Material Roll Certifications	**3/19/2025**	

Submittal Cover Sheet

SECTION 32 27 75 - GEONET GEOCOMPOSITE

ITEM # - SPEC I.D.

1.3.A

SUBMITTAL DESCRIPTION

Material Roll Certifications

DATE SUBMITTED AND/OR WHEN AVAILABLE

3/19/2025

SOLMAX

MANUFACTURING QUALITY CONTROL



PROJECT NUMBER: 24048

SALES ORDER: SO-097057

PACKING SLIP NUMBER: Pre-SO-097057-2

PROJECT NAME: CITY OF AMES LF - ASH POND

ROLL NUMBER	MANUFACT. DATE	RESIN LOT NUMBER	TOP LAYER 1	BOTTOM LAYER 1
Product Code : 1114765-53380-5				
FabriNet TRX 300 mil, Double Sided 6 oz/yd², Nonwoven Cal.				
TRI Austin Pickup - Kendall Villarreal				
Interface Friction: One sample 2 ft x RW				
0116-068704	2025-03-03	DSB610021	2028023346	2028023349
0116-068705	2025-03-03	DSB610021	2028023346	2028023349
0116-068708	2025-03-03	DSB610021	2028023346	2028023349
0116-068709	2025-03-03	DSB610021	2028023346	2028023349
0116-068710	2025-03-03	DSB610021	2028023346	2028023349
0116-068711	2025-03-03	DSB610021	2028023346	2028023349
0116-068712	2025-03-03	DSB610021	2027982992	2027981543
0116-068713	2025-03-03	DSB610021	2027982992	2027981543
0116-068714	2025-03-03	DSB610021	2027982992	2027981543
0116-068715	2025-03-03	DSB610021	2027982992	2027981543
0116-068716	2025-03-04	DSB610020	2027982992	2027981543
0116-068724	2025-03-04	DSB610020	2028030223	2028023344
0116-068725	2025-03-04	DSB610020	2028030223	2028023344
0116-068726	2025-03-04	DSB610020	2028030223	2028023344
0116-068727	2025-03-04	DSB610020	2028030223	2028023344
0116-068728	2025-03-04	DSB610020	2028030223	2028023344
0116-068729	2025-03-04	DSB610020	2028030223	2028023344
0116-068730	2025-03-04	DSB610020	2028030223	2028023344
0116-068731	2025-03-04	DSB610020	2028030223	2028023344
0116-068732	2025-03-04	DSB610020	2028030223	2028023344

Solmax is not a design professional and has not performed any design services to determine if Solmax's goods comply with any project plans or specifications, or with the application or use of Solmax's goods to any particular system, project, purpose, installation or specification.

Solmax Geosynthetics LLC
19103 GUNDLE RD,, HOUSTON, TX, UNITED STATES, 77073

SOLMAX

MANUFACTURING QUALITY CONTROL



PROJECT NUMBER: 24048

SALES ORDER: SO-097057

PACKING SLIP NUMBER: Pre-SO-097057-2

PROJECT NAME: CITY OF AMES LF - ASH POND

0116-068733	2025-03-04	DSB610020	2028023544	2028023530
0116-068734	2025-03-04	DSB610020	2028023544	2028023530
0116-068735	2025-03-04	DSB610020	2028023544	2028023530
0116-068736	2025-03-04	DSB610020	2028023544	2028023530
0116-068737	2025-03-04	DSB610020	2028023544	2028023530
0116-068738	2025-03-04	DSB610020	2028023544	2028023530
0116-068739	2025-03-04	DSB610020	2028023544	2028023530
0116-068740	2025-03-04	DSB610020	2028023544	2028023530
0116-068741	2025-03-04	DSB610020	2028023544	2028023530
0116-068742	2025-03-04	DSB610020	2028023513	2028023512
0116-068743	2025-03-04	DSB610020	2028023513	2028023512
0116-068744	2025-03-04	DSB610020	2028023513	2028023512
0116-068745	2025-03-04	DSB610020	2028023513	2028023512
0116-068746	2025-03-04	DSB610020	2028023513	2028023512
0116-068747	2025-03-04	DSB610020	2028023513	2028023512
0116-068748	2025-03-04	DSB610020	2028023513	2028023512
0116-068749	2025-03-04	DSB610020	2028023513	2028023512
0116-068750	2025-03-04	DSB610020	2028023513	2028023512
0116-068751	2025-03-04	DSB610020	2028023514	2028023585
0116-068752	2025-03-04	DSB610020	2028023514	2028023585
0116-068753	2025-03-04	DSB610020	2028023514	2028023585
0116-068754	2025-03-04	DSB610020	2028023514	2028023585
0116-068755	2025-03-04	DSB610020	2028023514	2028023585
0116-068756	2025-03-04	DSB610020	2028023514	2028023585
0116-068757	2025-03-04	DSB610020	2028023514	2028023585
0116-068758	2025-03-04	DSB610020	2028023514	2028023585
0116-068759	2025-03-04	DSB610020	2028023514	2028023585
0116-068760	2025-03-04	DSB610020	2028023514	2028023585
0116-068761	2025-03-04	DSB610020	2028023599	2028023589

Solmax is not a design professional and has not performed any design services to determine if Solmax's goods comply with any project plans or specifications, or with the application or use of Solmax's goods to any particular system, project, purpose, installation or specification.

Solmax Geosynthetics LLC
19103 GUNDLE RD,, HOUSTON, TX, UNITED STATES, 77073

SOLMAX

MANUFACTURING QUALITY CONTROL



PROJECT NUMBER: 24048

SALES ORDER: SO-097057

PACKING SLIP NUMBER: Pre-SO-097057-2

PROJECT NAME: CITY OF AMES LF - ASH POND

0116-068762	2025-03-04	DSB610020	2028023599	2028023589
0116-068763	2025-03-04	DSB610020	2028023599	2028023589
0116-068764	2025-03-04	DSB610020	2028023599	2028023589
0116-068765	2025-03-04	DSB610020	2028023599	2028023589
0116-068766	2025-03-04	DSB610020	2028023599	2028023589
0116-068767	2025-03-04	DSB610020	2028023599	2028023589
0116-068768	2025-03-04	DSB610020	2028023599	2028023589
0116-068769	2025-03-04	DSB610020	2028023599	2028023589
0116-068770	2025-03-04	DSB610020	2028023568	2028023545
0116-068771	2025-03-04	DSB610020	2028023568	2028023545
0116-068772	2025-03-04	DSB610020	2028023568	2028023545
0116-068773	2025-03-04	DSB610020	2028023568	2028023545
0116-068774	2025-03-04	DSB610020	2028023568	2028023545
0116-068775	2025-03-04	DSB610020	2028023568	2028023545
0116-068776	2025-03-04	DSB610020	2028023568	2028023545
0116-068777	2025-03-04	DSB610020	2028023568	2028023545
0116-068778	2025-03-04	DSB610020	2028023568	2028023545
0116-068779	2025-03-04	DSB610020	2028023571	2028023570
0116-068780	2025-03-04	DSB610020	2028023571	2028023570
0116-068781	2025-03-04	DSB610020	2028023571	2028023570
0116-068782	2025-03-04	DSB610020	2028023571	2028023570
0116-068783	2025-03-04	DSB610020	2028023571	2028023570
0116-068784	2025-03-04	DSB610020	2028023571	2028023570
0116-068785	2025-03-04	DSB610020	2028023571	2028023570
0116-068786	2025-03-04	DSB610020	2028023571	2028023570
0116-068787	2025-03-04	DSB610020	2028023571	2028023570
0116-068798	2025-03-05	DSB610020	2027982943	2028023584
0116-068799	2025-03-05	DSB610020	2027982943	2028023584
0116-068800	2025-03-05	DSB610020	2027982943	2028023584

Solmax is not a design professional and has not performed any design services to determine if Solmax's goods comply with any project plans or specifications, or with the application or use of Solmax's goods to any particular system, project, purpose, installation or specification.

Solmax Geosynthetics LLC
19103 GUNDLE RD,, HOUSTON, TX, UNITED STATES, 77073

SOLMAX

MANUFACTURING QUALITY CONTROL



PROJECT NUMBER: 24048

SALES ORDER: SO-097057

PACKING SLIP NUMBER: Pre-SO-097057-2

PROJECT NAME: CITY OF AMES LF - ASH POND

0116-068801	2025-03-05	DSB610020	2027982943	2028023584
0116-068802	2025-03-05	DSB610020	2027982943	2028023584
0116-068803	2025-03-05	DSB610020	2027982943	2028023584
0116-068804	2025-03-05	DSB610020	2027982943	2028023584
0116-068805	2025-03-05	DSB610020	2027982943	2028023584
0116-068806	2025-03-05	DSB610020	2027982943	2028023584
0116-068807	2025-03-05	DSB610020	2027982943	2028023584
0116-068808	2025-03-05	DSB610020	2028023597	2028023600
0116-068809	2025-03-05	DSB610020	2028023597	2028023600
0116-068810	2025-03-05	DSB610020	2028023597	2028023600
0116-068811	2025-03-05	DSB610020	2028023597	2028023600
0116-068812	2025-03-05	DSB610020	2028023597	2028023600

QUANTITY (ROLLS): 90

Solmax is not a design professional and has not performed any design services to determine if Solmax's goods comply with any project plans or specifications, or with the application or use of Solmax's goods to any particular system, project, purpose, installation or specification.

Solmax Geosynthetics LLC
19103 GUNDLE RD,, HOUSTON, TX, UNITED STATES, 77073

SOLMAX

MANUFACTURING QUALITY CONTROL

SOLMAX Roberto Garcia APPROVED QUALITY ASSURANCE

TEST RESULTS

PROJECT NUMBER: 24048

SALES ORDER: SO-097057

PACKING SLIP NUMBER: Pre-SO-097057-2

PROJECT NAME : CITY OF AMES LF - ASH POND

PRODUCT: 1114765-53380-5
FabriNet TRX 300 mil, Double Sided 6 oz/yd^2, Nonwoven Cal.

Test	Property	Direction	Test Method	Frequency	Rolls Unit
1	Thickness (min. avg.)		ASTM D5199	50,000 ft^2	mils
2	Carbon Black Content		ASTM D4218	50,000 ft^2	%
3	Density (min.)		ASTM D792	50,000 ft^2	g/cm^3
4	Tensile Stength (MD)	MD	ASTM D7179	50,000 ft^2	lbf/in
5	Ply Adhesion Average (min. avg.)	Top	ASTM D7005	50,000 ft^2	lbf/in
6	Ply Adhesion Average (min. avg.)	Bottom	ASTM D7005	50,000 ft^2	lbf/in
7	Geocomposite Transmissivity (x10^{-3})		ASTM D4716	540,000 ft^2	m^2/sec
8	Geonet Transmissivity (x10^{-3})		ASTM D4716	Once per Shift	m^2/sec

Test	1	2	3	4	5	6	7	8
SPECIFICATIONS	**290**	**2.0**	**0.94**	**75**	**1.0**	**1.0**	**5.5; 1.3; 0.69**	**7.5**
0116-068704	327.70	2.58	0.950	121	4.1	3.85	6.630	9.698
0116-068705	327.70	2.58	0.950	121	4.1	3.85	6.630	9.698
0116-068708	327.70	2.58	0.950	121	4.1	3.85	6.630	9.698
0116-068709	327.70	2.58	0.950	121	4.1	3.85	6.630	9.698
0116-068710	327.70	2.58	0.950	121	4.1	3.85	6.630	9.698
0116-068711	327.70	2.58	0.950	121	4.1	3.85	6.630	9.698
0116-068712	327.70	2.58	0.950	121	4.1	3.85	6.630	9.698
0116-068713	327.70	2.58	0.950	121	4.1	3.85	6.630	9.698
0116-068714	327.70	2.58	0.950	121	4.1	3.85	6.630	9.698
0116-068715	327.70	2.58	0.950	121	4.1	3.85	6.630	9.698
0116-068716	327.70	2.58	0.950	121	4.1	3.85	6.630	9.698
0116-068724	337.80	2.65	0.952	131	3.5	3.37	6.630	10.011
0116-068725	337.80	2.65	0.952	131	3.5	3.37	6.630	10.011
0116-068726	337.80	2.65	0.952	131	3.5	3.37	6.630	10.011
0116-068727	337.80	2.65	0.952	131	3.5	3.37	6.630	10.011
0116-068728	337.80	2.65	0.952	131	3.5	3.37	6.630	10.011
0116-068729	337.80	2.65	0.952	131	3.5	3.37	6.630	10.011

Solmax is not a design professional and has not performed any design services to determine if Solmax's goods comply with any project plans or specifications, or with the application or use of Solmax's goods to any particular system, project, purpose, installation or specification.

Solmax Geosynthetics LLC
19103 GUNDLE RD,, HOUSTON, TX, UNITED STATES, 77073

SOLMAX

MANUFACTURING QUALITY CONTROL

SOLMAX Roberto Garcia APPROVED QUALITY ASSURANCE

TEST RESULTS

PROJECT NUMBER: 24048

SALES ORDER: SO-097057

PACKING SLIP NUMBER: Pre-SO-097057-2

PROJECT NAME : CITY OF AMES LF - ASH POND

Test	1	2	3	4	5	6	7	8
0116-068730	337.80	2.65	0.952	131	3.5	3.37	6.630	10.011
0116-068731	337.80	2.65	0.952	131	3.5	3.37	6.630	10.011
0116-068732	337.80	2.65	0.952	131	3.5	3.37	6.630	10.011
0116-068733	337.80	2.65	0.952	131	3.5	3.37	6.630	10.011
0116-068734	339.50	2.37	0.952	131	3.5	3.37	6.630	10.011
0116-068735	339.50	2.37	0.952	131	3.5	3.37	6.630	10.011
0116-068736	339.50	2.37	0.952	131	3.5	3.37	6.630	10.011
0116-068737	339.50	2.37	0.952	131	3.5	3.37	6.630	10.011
0116-068738	339.50	2.37	0.952	131	3.5	3.37	6.630	10.011
0116-068739	339.50	2.37	0.952	131	3.5	3.37	6.630	10.011
0116-068740	339.50	2.37	0.952	131	3.5	3.37	6.630	10.011
0116-068741	339.50	2.37	0.952	131	3.5	3.37	6.630	10.011
0116-068742	339.50	2.37	0.952	131	3.5	3.37	6.630	10.011
0116-068743	339.50	2.37	0.952	131	3.5	3.37	6.630	10.011
0116-068744	326.80	2.27	0.951	124	3.7	3.74	6.630	10.011
0116-068745	326.80	2.27	0.951	124	3.7	3.74	6.630	10.011
0116-068746	326.80	2.27	0.951	124	3.7	3.74	6.630	10.011
0116-068747	326.80	2.27	0.951	124	3.7	3.74	6.630	10.011
0116-068748	326.80	2.27	0.951	124	3.7	3.74	6.630	10.011
0116-068749	326.80	2.27	0.951	124	3.7	3.74	6.630	10.011
0116-068750	326.80	2.27	0.951	124	3.7	3.74	6.630	10.011
0116-068751	326.80	2.27	0.951	124	3.7	3.74	6.630	10.011
0116-068752	326.80	2.27	0.951	124	3.7	3.74	6.630	10.011
0116-068753	326.80	2.27	0.951	124	3.7	3.74	6.630	10.011
0116-068754	335.00	2.43	0.951	124	3.7	3.74	6.630	10.011
0116-068755	335.00	2.43	0.951	124	3.7	3.74	6.630	10.011
0116-068756	335.00	2.43	0.951	124	3.7	3.74	6.630	10.011
0116-068757	335.00	2.43	0.951	124	3.7	3.74	6.630	10.011
0116-068758	335.00	2.43	0.951	124	3.7	3.74	6.630	10.011
0116-068759	335.00	2.82	0.951	124	3.7	3.74	6.630	10.011
0116-068760	335.00	2.82	0.951	124	3.7	3.74	6.630	10.011
0116-068761	335.00	2.82	0.951	124	3.7	3.74	6.630	10.011
0116-068762	335.00	2.82	0.951	124	3.7	3.74	6.630	10.011

Solmax is not a design professional and has not performed any design services to determine if Solmax's goods comply with any project plans or specifications, or with the application or use of Solmax's goods to any particular system, project, purpose, installation or specification.

Solmax Geosynthetics LLC
19103 GUNDLE RD,, HOUSTON, TX, UNITED STATES, 77073

SOLMAX

MANUFACTURING QUALITY CONTROL

SOLMAX Roberto Garcia APPROVED QUALITY ASSURANCE

TEST RESULTS

PROJECT NUMBER: 24048

SALES ORDER: SO-097057

PACKING SLIP NUMBER: Pre-SO-097057-2

PROJECT NAME : CITY OF AMES LF - ASH POND

Test	1	2	3	4	5	6	7	8
0116-068763	335.00	2.82	0.951	124	3.7	3.74	6.630	10.011
0116-068764	335.30	2.84	0.952	134	3.2	2.31	6.630	10.011
0116-068765	335.30	2.84	0.952	134	3.2	2.31	6.630	10.011
0116-068766	335.30	2.84	0.952	134	3.2	2.31	6.630	10.011
0116-068767	335.30	2.84	0.952	134	3.2	2.31	6.630	10.011
0116-068768	335.30	2.84	0.952	134	3.2	2.31	6.630	10.011
0116-068769	335.30	2.84	0.952	134	3.2	2.31	6.630	10.011
0116-068770	335.30	2.84	0.952	134	3.2	2.31	6.630	10.011
0116-068771	335.30	2.84	0.952	134	3.2	2.31	6.630	10.011
0116-068772	335.30	2.84	0.952	134	3.2	2.31	6.630	10.011
0116-068773	335.30	2.84	0.952	134	3.2	2.31	6.630	10.011
0116-068774	335.30	2.84	0.952	134	3.2	2.31	6.630	10.011
0116-068775	335.30	2.84	0.952	134	3.2	2.31	6.630	10.011
0116-068776	335.30	2.84	0.952	134	3.2	2.31	6.630	10.011
0116-068777	335.30	2.84	0.952	134	3.2	2.31	6.630	10.011
0116-068778	335.30	2.84	0.952	134	3.2	2.31	6.630	10.011
0116-068779	335.30	2.84	0.952	134	3.2	2.31	6.630	10.011
0116-068780	335.30	2.84	0.952	134	3.2	2.31	6.630	10.011
0116-068781	335.30	2.84	0.952	134	3.2	2.31	6.630	10.011
0116-068782	335.30	2.84	0.952	134	3.2	2.31	6.630	10.011
0116-068783	335.30	2.84	0.952	134	3.2	2.31	6.630	10.011
0116-068784	338.70	2.75	0.945	144	3.6	2.82	6.630	10.011
0116-068785	338.70	2.75	0.945	144	3.6	2.82	6.630	10.011
0116-068786	338.70	2.75	0.945	144	3.6	2.82	6.630	10.011
0116-068787	338.70	2.75	0.945	144	3.6	2.82	6.630	10.011
0116-068798	312.80	2.81	0.954	119	5.4	4.41	6.630	9.411
0116-068799	312.80	2.81	0.954	119	5.4	4.41	6.630	9.411
0116-068800	312.80	2.81	0.954	119	5.4	4.41	6.630	9.411
0116-068801	312.80	2.81	0.954	119	5.4	4.41	6.630	9.411
0116-068802	312.80	2.81	0.954	119	5.4	4.41	6.630	9.411
0116-068803	311.40	2.77	0.954	119	5.4	4.41	6.630	9.411
0116-068804	311.40	2.77	0.954	119	5.4	4.41	6.630	9.411
0116-068805	311.40	2.77	0.954	119	5.4	4.41	6.630	9.411

Solmax is not a design professional and has not performed any design services to determine if Solmax's goods comply with any project plans or specifications, or with the application or use of Solmax's goods to any particular system, project, purpose, installation or specification.

Solmax Geosynthetics LLC
19103 GUNDLE RD,, HOUSTON, TX, UNITED STATES, 77073

SOLMAX

MANUFACTURING QUALITY CONTROL

TEST RESULTS

PROJECT NUMBER: 24048

SALES ORDER: SO-097057

PACKING SLIP NUMBER: Pre-SO-097057-2

PROJECT NAME : CITY OF AMES LF - ASH POND

Test	1	2	3	4	5	6	7	8
0116-068806	311.40	2.77	0.954	119	5.4	4.41	6.630	9.411
0116-068807	311.40	2.77	0.954	119	5.4	4.41	6.630	9.411
0116-068808	311.20	2.71	0.954	119	5.4	4.41	6.630	9.411
0116-068809	311.20	2.71	0.954	119	5.4	4.41	6.630	9.411
0116-068810	311.20	2.71	0.954	119	5.4	4.41	6.630	9.411
0116-068811	311.20	2.71	0.954	119	5.4	4.41	6.630	9.411
0116-068812	311.20	2.71	0.954	119	5.4	4.41	6.630	9.411

Solmax is not a design professional and has not performed any design services to determine if Solmax's goods comply with any project plans or specifications, or with the application or use of Solmax's goods to any particular system, project, purpose, installation or specification.

Solmax Geosynthetics LLC
19103 GUNDLE RD,, HOUSTON, TX, UNITED STATES, 77073

SOLMAX

MANUFACTURING QUALITY CONTROL

SOLMAX Roberto Garcia APPROVED QUALITY ASSURANCE

TEST RESULTS

PROJECT NUMBER: 24048
SALES ORDER: SO-097057
PACKING SLIP NUMBER: Pre-SO-097057-2

PROJECT NAME : CITY OF AMES LF - ASH POND

PRODUCT: 1114765-53380-5
FabriNet TRX 300 mil, Double Sided 6 oz/yd^2, Nonwoven Cal.

Test	Property	Direction	Test Method	Frequency	Unit
1	Mass per Unit Area (min. avg.)		ASTM D5261	90,000 ft^2	oz/yd^2
	Grab Tensile Properties (min. avg)		ASTM D4632	90,000 ft^2	
2	Strength (MD)				lbf
3	Strength (CMD)				lbf
4	Elongation (MD)				%
5	Elongation (CMD)				%
6	Trapezoidal Tear Strength	MD	ASTM D4533	90,000 ft^2	lbf
7	Trapezoidal Tear Strength	TD	ASTM D4533	90,000 ft^2	lbf
8	Puncture Resistance		ASTM D4833		lbf
9	Puncture Resistance (CBR)		ASTM D6241	540,000 ft^2	lbf
10	Apparent Opening Size (max.)		ASTM D4751	540,000 ft^2	mm
11	Permittivity		ASTM D4491	540,000 ft^2	sec^{-1}
12	Water Flow Rate		ASTM D4491	540,000 ft^2	gpm/ft^2
13	Thickness (min. avg.)		ASTM D5199	90,000 ft^2	mils

Solmax is not a design professional and has not performed any design services to determine if Solmax's goods comply with any project plans or specifications, or with the application or use of Solmax's goods to any particular system, project, purpose, installation or specification.

Solmax Geosynthetics LLC
19103 GUNDLE RD,, HOUSTON, TX, UNITED STATES, 77073

SOLMAX

MANUFACTURING QUALITY CONTROL

SOLMAX Roberto Garcia APPROVED QUALITY ASSURANCE

TEST RESULTS

PROJECT NUMBER: 24048

SALES ORDER: SO-097057

PACKING SLIP NUMBER: Pre-SO-097057-2

PROJECT NAME : CITY OF AMES LF - ASH POND

Test	1	2	3	4	5	6	7	8	9	10	11
Specification	**6**	**170**	**170**	**50**	**50**	**70**	**70**	**90**	**435**	**0.212**	**1.5**
2027982943	6.4	193	232	89	83	88	102	118	531	0.180	2.1
2027982992	7.1	202	274	81	81	87	115	110	570	0.212	2.1
2028023346	6.2	195	226	72	78	86	116	111	641	0.212	2.5
2028023513	6.5	195	213	71	84	84	102	118	664	0.180	2.4
2028023514	6.5	195	213	71	84	84	102	118	664	0.180	2.4
2028023544	6.8	214	229	78	80	95	115	123	553	0.212	2.9
2028023568	6.5	200	234	73	79	84	101	113	560	0.180	2.4
2028023571	6.5	200	234	73	79	84	101	113	560	0.180	2.4
2028023597	6.6	233	250	77	83	99	123	116	587	0.212	2.5
2028023599	6.6	233	250	77	83	99	123	116	587	0.212	2.5
2028030223	6.7	232	255	79	89	112	120	142	602	0.212	2.2
Specification	**6**	**170**	**170**	**50**	**50**	**70**	**70**	**90**	**435**	**0.212**	**1.5**
2027981543	6.8	235	275	85	78	94	129	124	646	0.180	2.3
2028023344	6.5	194	232	76	81	93	102	116	562	0.212	2.5
2028023349	6.2	195	226	72	78	86	116	111	641	0.212	2.5
2028023512	6.5	195	213	71	84	84	102	118	664	0.180	2.4
2028023530	6.6	214	224	74	78	92	105	114	596	0.212	2.2
2028023545	6.8	214	229	78	80	95	115	123	553	0.212	2.9
2028023570	6.5	200	234	73	79	84	101	113	560	0.180	2.4
2028023584	6.3	217	226	72	82	87	103	122	605	0.212	2.5
2028023585	6.3	217	226	72	82	87	103	122	605	0.212	2.5
2028023589	7.2	238	248	75	80	101	105	124	670	0.212	2.5
2028023600	7.1	227	261	75	80	119	127	122	604	0.212	2.7

Solmax is not a design professional and has not performed any design services to determine if Solmax's goods comply with any project plans or specifications, or with the application or use of Solmax's goods to any particular system, project, purpose, installation or specification.

Solmax Geosynthetics LLC
19103 GUNDLE RD,, HOUSTON, TX, UNITED STATES, 77073

SOLMAX

MANUFACTURING QUALITY CONTROL

TEST RESULTS

SOLMAX Roberto Garcia APPROVED QUALITY ASSURANCE

PROJECT NUMBER: 24048

SALES ORDER: SO-097057

PACKING SLIP NUMBER: Pre-SO-097057-2

PROJECT NAME : CITY OF AMES LF - ASH POND

Test	12	13
Specification	**110**	**70**
2027982943	153	87
2027982992	157	93
2028023346	187	79
2028023513	175	86
2028023514	175	86
2028023544	211	87
2028023568	174	84
2028023571	174	84
2028023597	185	86
2028023599	185	86
2028030223	164	89
Specification	**110**	**70**
2027981543	169	94
2028023344	186	84
2028023349	187	79
2028023512	175	86
2028023530	162	85
2028023545	211	87
2028023570	174	84
2028023584	181	85
2028023585	181	85
2028023589	182	94
2028023600	202	94

Solmax is not a design professional and has not performed any design services to determine if Solmax's goods comply with any project plans or specifications, or with the application or use of Solmax's goods to any particular system, project, purpose, installation or specification.

Solmax Geosynthetics LLC
19103 GUNDLE RD,, HOUSTON, TX, UNITED STATES, 77073

SOLMAX

MANUFACTURING QUALITY CONTROL

TEST RESULTS - Transmissivity

PROJECT NUMBER: 24048
REFERENCE NUMBER: SO-097057



PROJECT NAME : CITY OF AMES LF - ASH POND

PRODUCT: 1114765-53380-5

Description: FabriNet TRX 300 mil, Double Sided 6 oz/yd², Nonwoven Cal.

Test	Property	Test Method	Frequency	Unit
	Transmissivity	ASTM D4716	1/540,000 sf ft²	(m²/sec)

Specification: Geocomposite

Roll Number	Pressure (psf)	Gradient	Net/Composite	Transmissivity Results (m²/sec)	Transmissivity Results (gal/min/ft)	Seat Time (min)	Boundary
0116-068704	300	0.05	Geocomposite	6.71E-03	32.42	6000	Sand/Composite/Text. Geomembrane
0116-068704	300	0.25	Geocomposite	4.79E-03	23.14	6000	Sand/Composite/Text. Geomembrane
0116-068704	300	0.5	Geocomposite	6.63E-03	32.03	6000	Sand/Composite/Text. Geomembrane

CoA Date: 02/03/2025

Certificate of Analysis

Shipped To: SOLMAX GEOSYNTHETICS, LLC:HOUSTON
19103 Gundle Rd
HOUSTON TX 77073-3515
USA

Recipient: Garcia
Fax:

Delivery #: 81311072
PO #: 613723
Weight: 194600.000 LB
Ship Date: 02/03/2025
Package: BULK
Mode: Hopper Car
Car #: HCBX001693
Seal No: 414991

Product:
MARLEX HHM 5502BN POLYETHYLENE in Bulk

Lot Number: DSB610021

Property	Test Method	Value	Unit
Melt Index	ASTM D1238	0.35	g/10min
Density	D1505	0.9548	g/cm3
Production date		20250201	

The data set forth herein have been carefully compiled by Chevron Phillips Chemical Company LP (CPChem).
However, there is no warranty of any kind, either expressed or implied, applicable to its use, and the user assumes all risk and liability in connection therewith.

JIAHUI LI
QUALITY ASSURANCE SUPERINTENDENT

For CoA questions contact Leslie Dziamara at +1-832-813-4806-4498

CoA Date: 02/03/2025

Certificate of Analysis

Shipped To: SOLMAX GEOSYNTHETICS, LLC:HOUSTON
19103 Gundle Rd
HOUSTON TX 77073-3515
USA

Recipient: Garcia
Fax:

Delivery #: 81311071
PO #: 613723
Weight: 197250.000 LB
Ship Date: 02/03/2025
Package: BULK
Mode: Hopper Car
Car #: HLTX007618
Seal No: 414990

Product:
MARLEX HHM 5502BN POLYETHYLENE in Bulk

Lot Number: DSB610020

Property	Test Method	Value	Unit
Melt Index	ASTM D1238	0.35	g/10min
Density	D1505	0.9548	g/cm3
Production date		20250201	

The data set forth herein have been carefully compiled by Chevron Phillips Chemical Company LP (CPChem).
However, there is no warranty of any kind, either expressed or implied, applicable to its use, and the user assumes all risk and liability in connection therewith.

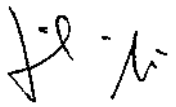

JIAHUI LI
QUALITY ASSURANCE SUPERINTENDENT

For CoA questions contact Leslie Dziamara at +1-832-813-4806-4498

G.3 – Geotextile

Project: City of Ames Ash Pond Closure
SCS Project #: 27219356.02

Section: 32 23 60
Title: Submittal #S8A – Geotextiles

Submittal Review

- [ ] Conforms as submitted
- [X] Conforms as noted – Resubmittal is:
  - [X] Not required
  - [ ] Required
  - [ ] Noted portions only
  - [ ] For record only
- [ ] Does not conform
- [ ] Not required by contract documents
- [ ] For information only

Corrections or comments made on submittals during this review do not relieve the contractor from compliance with requirements of the drawings and specifications. This check is only for review of general conformance with the design concept of the project and general compliance with the information given in the contract documents. The contractor is responsible for; confirming and correlating all quantities and dimensions; selecting fabrication processes and techniques of construction; coordinating contractor's work with that of all other trades; and performing contractor's work in a safe and satisfactory manner.

Comments:

- Contract Item 10 (Ash Contact Water Storage Area) is shown to be Geotextile Filter in the Drawings, but is listed as Geotextile Separator on the bid form; please make this Geotextile Filter.
- The Geotextile Separator permittivity and AOS requirements are not satisfied with GSFW-315 material. Based on discussion and evaluation of the applications:
  - **GSFW-315 conforms** to the project performance requirements for the geotextile separator used for roadway construction only.

Reviewed By: Matt Kuhlenengel	Date: 5/9/2024
SCS QC Review By: Deb Nelson	Date: 5/10/2024

G:\Project\27219356.02\Data and Calculations\Submittals\S8 - Geotextile\SCS Review S8-Geotextile_240424_.docx

SHOP DRAWING TRANSMITTAL

DATE: 5/3/2024

Project: Ames Ash Pond Closure & RDF Ash Pond Construction

Specification Section Number: 32 23 60 Geotextile

Transmittal Number: 8a

1st Submittal _____ or Resubmital ____X___

Contract Item	Description of Material	Manufacturer	Drawing or Data No.	Action Taken
8, 10 & 41	140 NL	Mirafi		
33	315 Woven Geotextile	GSFW		
31	170N	Mirafi		

As stated in the Contract Documents, the undersigned CONTRACTOR's submission of these Shop Drawings or samples shall constitute a representative to the OWNER and the ENGINEER that the CONTRACTOR has either determined and verified all quantities, dimensions, field construction criteria, materials, catalogue numbers and similar data or he assumes full responsibility for doing so, and that he has reviewed and coordinated each Shop Drawing or sample with the requirements of the work and the Contract Documents and he represents to the OWNER and the ENGINEER that item(s) described by these Shop Drawings do comply with the requirements of the Contract Documents. The undersigned Contractor certifies that the equipment included in this submittal complies with the latest requirements of the Occupational Health and Safety Act of 1970 including any standards or regulations established by the U.S. Secretary of Labor in administration of said act, and the Iowa Occupational Safety and Health Statutes.

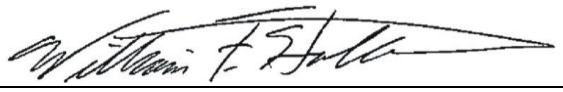

5/3/2024

Supplier/Subcontractor:
Quick Supply

(Autorized Signature of Contractor) **(Date)**

JB Holland Construction, Inc.

2191 State Hwy 52, Decorah, IA 52101

FOR ENGINEER'S USE

n as designated above in accordance with the following legend:

A- No Exception Taken
B- Make Corrections Noted & Resubmit
C- Revise & Resubmit
D- Rejected
E- Submit Specified Item

BY: _____

DATE: _____

Geotextile Filter fabric for subdrain pipe trenches

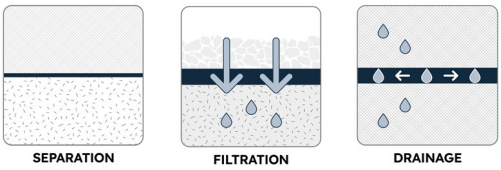

MIRAFI 140NL

MIRAFI® 140NL is a needlepunched nonwoven geotextile composed of polypropylene fibers, which are formed into a stable network such that the fibers retain their relative position. MIRAFI 140NL is inert to biological degradation and resists naturally encountered chemicals, alkalis, and acids.

TenCate Geosynthetics Americas (A Solmax Company) is accredited by Geosynthetic Accreditation Institute – Laboratory Accreditation Program (GAI-LAP).

MIRAFI 140NL meets Build America, Buy America Act, Pub. L. No. 117-58, div. G §§ 70901-52.

MECHANICAL PROPERTIES	TEST METHOD	UNIT	MINIMUM AVERAGE ROLL VALUE	
			MD	CD
Grab Tensile Strength	ASTM D4632	lbs (N)	90 (401)	90 (401)
Grab Tensile Elongation	ASTM D4632	%	50	50
Trapezoid Tear Strength	ASTM D4533	lbs (N)	40 (178)	40 (178)
CBR Puncture Strength	ASTM D6241	lbs (N)	250 (1113)	

			MAXIMUM OPENING SIZE
Apparent Opening Size (AOS)	ASTM D4751	U.S. Sieve (mm)	50 (0.30)

			MINIMUM ROLL VALUE
Permittivity	ASTM D4491	sec^{-1}	2.0
Flow Rate	ASTM D4491	gal/min/ft² (l/min/m²)	145 (5907)

			MINIMUM TEST VALUE
UV Resistance (at 500 hours)	ASTM D4355	% strength retained	70

PHYSICAL PROPERTIES	UNIT	ROLL SIZE	
Roll Dimensions (width x length)	ft (m)	12.5 x 360 (3.8 x 110)	15 x 360 (4.57 x 110)
Roll Area	yd^2 (m^2)	500 (418)	600 (502)
Roll Weight	lbs (kg)	130 (59)	152 (69)

365 South Holland Drive Pendergrass, GA 30567

Tel +1 706 693 2226 www.tencategeo.us

Solmax is not a design or engineering professional and has not performed any such design services to determine if Solmax's goods comply with any project plans or specifications, or with the application or use of Solmax's goods to any particular system, project, purpose, installation, or specification.

SOLMAX

Roadway seperation fabric

GSFW-315 Woven Geotextile

Product Data Sheet

Product Details

GSFW-315 is manufactured using high tenacity polypropylene yarns that are woven to form a dimensionally stable network, which allows the yarns to maintain their relative position. GSFW-315 resists ultraviolet deterioration, rotting and biological degradation and is inert to commonly encountered soil chemicals.

Fabric Properties

Property	Test	MARV English	MARV Metric
Tensile Strength (grab tensile)	ASTM D4632	315 lbs	1400 N
Elongation	ASTM D4632	15%	15%
CBR Puncture	ASTM D6241	900 lbs	4003 N
Trapezoidal Tear	ASTM D4533	120 lbs	533 N
UV Resistance (at 500 hours)	ASTM D4355	70%	70%
Apparent Opening Size	ASTM D4751	40 US Std. Sieve	0.425 mm
Permittivity	ASTM D4491	0.05 sec-1	0.05 sec-1
Water Flow Rate	ASTM D4491	4 gpm/ft2	163 l/min/m2
Weight (typical)	ASTM D5261	6.0 oz	203 g/m2
Thickness (typical)	ASTM D5199	25 mils	0.6 mm
Roll Dimensions (width x length)	na	*12.5' x 360'	3.81 m x 110 m
Roll Area	na	500 sq. yds.	418 m2
Estimated Roll Weight	na	222 lbs	101 kg

***Alternate widths include 15' and 17.5'. Ask your local representative for availability in your area.

Installation Guidelines

Clear, grub and excavate (as required) to the plan subgrade or undercut elevation, stripping topsoil, deleterious debris and unsuitable material from the site. The surface of the subgrade should be relatively smooth and level, and depressions or humps greater than 6 inches (15 cm) should be graded out. The fabric should be placed directly on the prepared subgrade. It should be rolled out flat and tight. Overlap should be determined by the engineer. The fabric may be held in place with sod staples or fabric pins. Aggregate should be placed directly over the fabric in 8-12" lifts. Care should be taken during compaction to ensure no damage to the subgrade. If the subgrade pumps or ruts, consideration for an alternative geosynthetic fabric is recommended.

ASP Enterprises
aspent.com
636.343.4357

Quick Supply Co.
quicksupplyco.com
515.289.1271

Bowman Construction Supply
bowmanconstructionsupply.com
303.696.8960

Cascade Geosynthetics
cascadegeos.com
971.339.1020

Geotextile Separator Fabric for under Erosion stone

TECHNICAL DATA SHEET

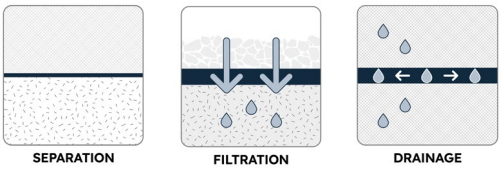

MIRAFI 170N

MIRAFI® 170N is a needlepunched nonwoven geotextile composed of polypropylene fibers, which are formed into a stable network such that the fibers retain their relative position. MIRAFI 170N is inert to biological degradation and resists naturally encountered chemicals, alkalis, and acids.

TenCate Geosynthetics Americas (A Solmax Company) is accredited by Geosynthetic Accreditation Institute – Laboratory Accreditation Program (GAI-LAP).

MIRAFI 170N meets Build America, Buy America Act, Pub. L. No. 117-58, div. G §§ 70901-52.

MECHANICAL PROPERTIES	TEST METHOD	UNIT	MINIMUM AVERAGE ROLL VALUE	
			MD	CD
Grab Tensile Strength	ASTM D4632	lbs (N)	180 (801)	180 (801)
Grab Tensile Elongation	ASTM D4632	%	50	50
Trapezoid Tear Strength	ASTM D4533	lbs (N)	75 (334)	75 (334)
CBR Puncture Strength	ASTM D6241	lbs (N)	450 (2003)	
			MAXIMUM OPENING SIZE	
Apparent Opening Size (AOS)	ASTM D4751	U.S. Sieve (mm)	70 (0.212)	
			MINIMUM ROLL VALUE	
Permittivity	ASTM D4491	sec^{-1}	1.4	
Flow Rate	ASTM D4491	gal/min/ft² (l/min/m²)	105 (4278)	
			MINIMUM TEST VALUE	
UV Resistance (at 500 hours)	ASTM D4355	% strength retained	70	

PHYSICAL PROPERTIES	UNIT	ROLL SIZE
Roll Dimensions (width x length)	ft (m)	15 x 300 (4.5 x 91)
Roll Area	yd^2 (m^2)	500 (418)
Roll Weight	lbs (kg)	223 (101)

365 South Holland Drive Pendergrass, GA 30567

Tel +1 706 693 2226 www.tencategeo.us

Solmax is not a design or engineering professional and has not performed any such design services to determine if Solmax's goods comply with any project plans or specifications, or with the application or use of Solmax's goods to any particular system, project, purpose, installation, or specification.

SOLMAX

Appendix H

Geosynthetic Materials Conformance Test Results

H.1 – Conformance Test Results

April 17, 2025

Mail To:

Marty Sturzl
SCS Engineers

email: msturzl@scsengineers.com

Bill To:

<= Same

Dear Mr. Sturzl:

Thank you for consulting TRI/Environmental, Inc. (TRI) for your geosynthetics testing needs.
TRI is pleased to submit this final report of the laboratory testing for the sample(s) listed below.

Project: **City of Ames Ash Pond Closure 2024**

TRI Job Reference Number: 25-01424

Material(s) Tested: Five, Solmax 40 mil Textured LLDPE Geomembrane(s)

Test(s) Requested:

Thickness (ASTM D5994)
Density (ASTM D1505)
Melt Flow Index (ASTM D1238, Method A, 190°C / 2.16 kg)
Tensile Properties (ASTM D6693)

If you have any questions or require any additional information, please call us at 1-800-880-8378

Sincerely,

Mansukh Patel
Laboratory Manager
Geosynthetic Services Division

The testing herein is based upon accepted industry practice as well as the test method listed. Test results reported herein do not apply to samples other than those tested. TRI neither accepts responsibility for nor makes claim as to the final use and purpose of the material. TRI observes and maintains client confidentiality. TRI limits reproduction of this report, except in full, without prior approval of TRI.

GEOMEMBRANE TEST RESULTS
TRI Client: SCS Engineers
Project: City of Ames Ash Pond Closure 2024

Material: Solmax 40 mil Textured LLDPE Geomembrane
Sample Identification: 0105-220465
TRI Log #: 25-01424

PARAMETER	TEST REPLICATE NUMBER 1	2	3	4	5	6	7	8	9	10	MEAN	STD. DEV.	PROJ. SPEC.
Thickness (ASTM D5994)													
Thickness (mils)	40	42	43	45	44	41	41	43	40	40	**42**	2	38 min ave
											40	<< min	36, 8 of 10
													34 ind min
Density (ASTM D1505)													
Density (g/cm3)	0.936	0.936	0.936								**0.936**	0.000	0.939 max
Melt Flow Index (ASTM D1238, Method A, 190°C / 2.16 kg)													
Melt Flow Index (g/10 min)	0.4334	0.4502									**0.4418**		1.0 max
Tensile Properties (ASTM D6693, 2 ipm strain rate)													
MD Yield Strength (ppi)	94	91	87	98	92						**92**	4	
TD Yield Strength (ppi)	94	90	89	92	99						**93**	4	
MD Break Strength (ppi)	145	174	149	141	192						**160**	22	60 min
TD Break Strength (ppi)	142	128	131	117	139						**131**	10	60 min
MD Yield Elongation (%)	17	17	19	19	18						**18**	1	
TD Yield Elongation (%)	17	16	13	14	15						**15**	2	
MD Break Elongation (%)	554	654	552	521	681						**592**	70	250 min
TD Break Elongation (%)	569	541	523	439	521						**519**	48	250 min

SP-NCTL Stress Crack Resistance (ASTM D5397, App)
Material Type:

SURFACTANT: CO-630
EXPOSURE PERIOD: **Hours**
DATE TEST STARTED:
TEST TEMPERATURE: 50C

Machine direction yield stress: (psi)
x 30% 0 (x 0.30)
x hinge thickness (in) (80% of thickness)
x specimen width 0.124 (0.124")
Load 0.00 (lbs)

Mechanical Advantage
Lever Weight (lbs)
Grip Weight (lbs)

Applied load = (Load - Lever Weight + Grip Weight)/Mechanical Advantage = #DIV/0! lbs = #DIV/0! grams

Replicate No.:	1	2	3	4	5								
No. Hours to Failure:													500

MD Machine Direction TD Transverse Direction

The testing herein is based upon accepted industry practice as well as the test method listed. Test results reported herein do not apply to samples other than those tested. TRI neither accepts responsibility for nor makes claim as to the final use and purpose of the material. TRI observes and maintains client confidentiality. TRI limits reproduction of this report, except in full, without prior approval of TRI.

GEOMEMBRANE TEST RESULTS
TRI Client: SCS Engineers
Project: City of Ames Ash Pond Closure 2024

Material: Solmax 40 mil Textured LLDPE Geomembrane
Sample Identification: 0105-220466
TRI Log #: 25-01424

PARAMETER	TEST REPLICATE NUMBER										MEAN	STD. DEV.	PROJ. SPEC.
	1	2	3	4	5	6	7	8	9	10			
Thickness (ASTM D5994)													
													38 min ave
Thickness (mils)	36	44	42	40	39	43	43	41	42	39	**41**	2	36, 8 of 10
											36	<< min	34 ind min

The testing herein is based upon accepted industry practice as well as the test method listed. Test results reported herein do not apply to samples other than those tested. TRI neither accepts responsibility for nor makes claim as to the final use and purpose of the material. TRI observes and maintains client confidentiality. TRI limits reproduction of this report, except in full, without prior approval of TRI.

GEOMEMBRANE TEST RESULTS
TRI Client: SCS Engineers
Project: City of Ames Ash Pond Closure 2024

Material: Solmax 40 mil Textured LLDPE Geomembrane
Sample Identification: 0105-220467
TRI Log #: 25-01424

PARAMETER	TEST REPLICATE NUMBER										MEAN	STD. DEV.	PROJ. SPEC.
	1	2	3	4	5	6	7	8	9	10			
Thickness (ASTM D5994)													
													38 min ave
Thickness (mils)	42	43	41	43	43	40	40	44	45	41	**42**	1	36, 8 of 10
											40	<< min	34 ind min

The testing herein is based upon accepted industry practice as well as the test method listed. Test results reported herein do not apply to samples other than those tested. TRI neither accepts responsibility for nor makes claim as to the final use and purpose of the material. TRI observes and maintains client confidentiality. TRI limits reproduction of this report, except in full, without prior approval of TRI.

GEOMEMBRANE TEST RESULTS
TRI Client: SCS Engineers
Project: City of Ames Ash Pond Closure 2024

Material: Solmax 40 mil Textured LLDPE Geomembrane
Sample Identification: 0105-220468
TRI Log #: 25-01424

PARAMETER	TEST REPLICATE NUMBER										MEAN	STD. DEV.	PROJ. SPEC.
	1	2	3	4	5	6	7	8	9	10			
Thickness (ASTM D5994)													
													38 min ave
Thickness (mils)	40	43	40	37	43	46	44	41	43	39	**42**	3	36, 8 of 10
											37	<< min	34 ind min

The testing herein is based upon accepted industry practice as well as the test method listed. Test results reported herein do not apply to samples other than those tested. TRI neither accepts responsibility for nor makes claim as to the final use and purpose of the material. TRI observes and maintains client confidentiality. TRI limits reproduction of this report, except in full, without prior approval of TRI.

GEOMEMBRANE TEST RESULTS
TRI Client: SCS Engineers
Project: City of Ames Ash Pond Closure 2024

Material: Solmax 40 mil Textured LLDPE Geomembrane
Sample Identification: 0105-220469
TRI Log #: 25-01424

PARAMETER	TEST REPLICATE NUMBER										MEAN	STD. DEV.	PROJ. SPEC.
	1	2	3	4	5	6	7	8	9	10			
Thickness (ASTM D5994)													
													38 min ave
Thickness (mils)	42	40	42	43	41	43	45	41	41	39	**42**	2	36, 8 of 10
											39	<< min	34 ind min

The testing herein is based upon accepted industry practice as well as the test method listed. Test results reported herein do not apply to samples other than those tested. TRI neither accepts responsibility for nor makes claim as to the final use and purpose of the material. TRI observes and maintains client confidentiality. TRI limits reproduction of this report, except in full, without prior approval of TRI.

April 16, 2025

Mail To:

Marty Sturzl
SCS Engineers

email: msturzl@scsengineers.com

Bill To:

<= Same

Dear Mr. Sturzl:

Thank you for consulting TRI/Environmental, Inc. (TRI) for your geosynthetics testing needs.
TRI is pleased to submit this final report of the laboratory testing for the sample(s) listed below.

Project: **City of Ames Ash Pond Closure 2024**

TRI Job Reference Number: 25-01425

Material(s) Tested: Five, Solmax 40 mil Textured LLDPE Geomembrane(s)

Test(s) Requested:

Thickness (ASTM D5994)
Density (ASTM D1505)
Melt Flow Index (ASTM D1238, Method A, 190°C / 2.16 kg)
Tensile Properties (ASTM D6693)

If you have any questions or require any additional information, please call us at 1-800-880-8378

Sincerely,

Mansukh Patel
Laboratory Manager
Geosynthetic Services Division

The testing herein is based upon accepted industry practice as well as the test method listed. Test results reported herein do not apply to samples other than those tested. TRI neither accepts responsibility for nor makes claim as to the final use and purpose of the material. TRI observes and maintains client confidentiality. TRI limits reproduction of this report, except in full, without prior approval of TRI.

GEOMEMBRANE TEST RESULTS
TRI Client: SCS Engineers
Project: City of Ames Ash Pond Closure 2024

Material: Solmax 40 mil Textured LLDPE Geomembrane
Sample Identification: 0105-220470
TRI Log #: 25-01425

PARAMETER	TEST REPLICATE NUMBER										MEAN	STD. DEV.	PROJ. SPEC.
	1	2	3	4	5	6	7	8	9	10			
Thickness (ASTM D5994)													
													38 min ave
Thickness (mils)	40	35	38	40	40	41	39	41	36	42	**39**	2	36, 8 of 10
											35	<< min	34 ind min

The testing herein is based upon accepted industry practice as well as the test method listed. Test results reported herein do not apply to samples other than those tested. TRI neither accepts responsibility for nor makes claim as to the final use and purpose of the material. TRI observes and maintains client confidentiality. TRI limits reproduction of this report, except in full, without prior approval of TRI.

GEOMEMBRANE TEST RESULTS
TRI Client: SCS Engineers
Project: City of Ames Ash Pond Closure 2024

Material: Solmax 40 mil Textured LLDPE Geomembrane
Sample Identification: 0105-220471
TRI Log #: 25-01425

PARAMETER	TEST REPLICATE NUMBER 1	2	3	4	5	6	7	8	9	10	MEAN	STD. DEV.	PROJ. SPEC.
Thickness (ASTM D5994)													
													38 min ave
Thickness (mils)	40	38	41	40	43	42	42	40	39	42	**41**	1	36, 8 of 10
											38	<< min	34 ind min
Density (ASTM D1505)													
Density (g/cm3)	0.936	0.936	0.936								**0.936**	0.000	0.939 max
Melt Flow Index (ASTM D1238, Method A, 190°C / 2.16 kg)													
Melt Flow Index (g/10 min)	0.4402	0.4573									**0.4488**		1.0 max
Tensile Properties (ASTM D6693, 2 ipm strain rate)													
MD Yield Strength (ppi)	96	92	97	88	89						**92**	4	
TD Yield Strength (ppi)	89	87	95	85	89						**89**	4	
MD Break Strength (ppi)	166	169	136	176	170						**163**	16	60 min
TD Break Strength (ppi)	110	141	132	124	145						**130**	14	60 min
MD Yield Elongation (%)	19	19	19	19	17						**19**	1	
TD Yield Elongation (%)	15	13	15	17	17						**15**	2	
MD Break Elongation (%)	612	643	504	646	630						**607**	59	250 min
TD Break Elongation (%)	450	566	511	501	569						**519**	50	250 min

MD Machine Direction TD Transverse Direction

The testing herein is based upon accepted industry practice as well as the test method listed. Test results reported herein do not apply to samples other than those tested. TRI neither accepts responsibility for nor makes claim as to the final use and purpose of the material. TRI observes and maintains client confidentiality. TRI limits reproduction of this report, except in full, without prior approval of TRI.

GEOMEMBRANE TEST RESULTS
TRI Client: SCS Engineers
Project: City of Ames Ash Pond Closure 2024

Material: Solmax 40 mil Textured LLDPE Geomembrane
Sample Identification: 0105-220472
TRI Log #: 25-01425

PARAMETER	TEST REPLICATE NUMBER										MEAN	STD. DEV.	PROJ. SPEC.
	1	2	3	4	5	6	7	8	9	10			
Thickness (ASTM D5994)													
													38 min ave
Thickness (mils)	39	37	43	42	38	43	44	41	42	37	**41**	3	36, 8 of 10
											37	<< min	34 ind min

The testing herein is based upon accepted industry practice as well as the test method listed. Test results reported herein do not apply to samples other than those tested. TRI neither accepts responsibility for nor makes claim as to the final use and purpose of the material. TRI observes and maintains client confidentiality. TRI limits reproduction of this report, except in full, without prior approval of TRI.

GEOMEMBRANE TEST RESULTS
TRI Client: SCS Engineers
Project: City of Ames Ash Pond Closure 2024

Material: Solmax 40 mil Textured LLDPE Geomembrane
Sample Identification: 0105-220473
TRI Log #: 25-01425

PARAMETER	TEST REPLICATE NUMBER										MEAN	STD. DEV.	PROJ. SPEC.
	1	2	3	4	5	6	7	8	9	10			
Thickness (ASTM D5994)													
													38 min ave
Thickness (mils)	40	40	43	44	43	43	44	43	44	40	**42**	2	36, 8 of 10
											40	<< min	34 ind min

The testing herein is based upon accepted industry practice as well as the test method listed. Test results reported herein do not apply to samples other than those tested. TRI neither accepts responsibility for nor makes claim as to the final use and purpose of the material. TRI observes and maintains client confidentiality. TRI limits reproduction of this report, except in full, without prior approval of TRI.

GEOMEMBRANE TEST RESULTS
TRI Client: SCS Engineers
Project: City of Ames Ash Pond Closure 2024

Material: Solmax 40 mil Textured LLDPE Geomembrane
Sample Identification: 0105-220474
TRI Log #: 25-01425

PARAMETER	TEST REPLICATE NUMBER										MEAN	STD. DEV.	PROJ. SPEC.
	1	2	3	4	5	6	7	8	9	10			
Thickness (ASTM D5994)													
													38 min ave
Thickness (mils)	40	41	42	43	44	41	42	42	42	41	**42**	1	36, 8 of 10
											40	<< min	34 ind min

The testing herein is based upon accepted industry practice as well as the test method listed. Test results reported herein do not apply to samples other than those tested. TRI neither accepts responsibility for nor makes claim as to the final use and purpose of the material. TRI observes and maintains client confidentiality. TRI limits reproduction of this report, except in full, without prior approval of TRI.

April 16, 2025

Mail To:

Marty Sturzl
SCS Engineers

email: msturzl@scsengineers.com

Bill To:

<= Same

Dear Mr. Sturzl:

Thank you for consulting TRI/Environmental, Inc. (TRI) for your geosynthetics testing needs.
TRI is pleased to submit this final report of the laboratory testing for the sample(s) listed below.

Project: **City of Ames Ash Pond Closure 2024**

TRI Job Reference Number: 25-01426

Material(s) Tested: Three, Solmax 40 mil Textured LLDPE Geomembrane(s)

Test(s) Requested:

Thickness (ASTM D5994)
Density (ASTM D1505)
Melt Flow Index (ASTM D1238, Method A, 190°C / 2.16 kg)
Tensile Properties (ASTM D6693)

If you have any questions or require any additional information, please call us at 1-800-880-8378

Sincerely,

Mansukh Patel
Laboratory Manager
Geosynthetic Services Division

The testing herein is based upon accepted industry practice as well as the test method listed. Test results reported herein do not apply to samples other than those tested. TRI neither accepts responsibility for nor makes claim as to the final use and purpose of the material. TRI observes and maintains client confidentiality. TRI limits reproduction of this report, except in full, without prior approval of TRI.

GEOMEMBRANE TEST RESULTS
TRI Client: SCS Engineers
Project: City of Ames Ash Pond Closure 2024

Material: Solmax 40 mil Textured LLDPE Geomembrane
Sample Identification: 0105-220475
TRI Log #: 25-01426

PARAMETER	TEST REPLICATE NUMBER										MEAN	STD. DEV.	PROJ. SPEC.
	1	2	3	4	5	6	7	8	9	10			
Thickness (ASTM D5994)													
													38 min ave
Thickness (mils)	41	41	43	42	41	45	43	43	41	37	**42**	2	36, 8 of 10
											37	<< min	34 ind min

The testing herein is based upon accepted industry practice as well as the test method listed. Test results reported herein do not apply to samples other than those tested. TRI neither accepts responsibility for nor makes claim as to the final use and purpose of the material. TRI observes and maintains client confidentiality. TRI limits reproduction of this report, except in full, without prior approval of TRI.

GEOMEMBRANE TEST RESULTS
TRI Client: SCS Engineers
Project: City of Ames Ash Pond Closure 2024

Material: Solmax 40 mil Textured LLDPE Geomembrane
Sample Identification: 0105-220476
TRI Log #: 25-01426

PARAMETER	TEST REPLICATE NUMBER										MEAN	STD. DEV.	PROJ. SPEC.
	1	2	3	4	5	6	7	8	9	10			
Thickness (ASTM D5994)													
													38 min ave
Thickness (mils)	40	43	42	43	45	46	42	42	40	39	**42**	2	36, 8 of 10
											39	<< min	34 ind min
Density (ASTM D1505)													
Density (g/cm3)	0.936	0.936	0.936								**0.936**	0.000	0.939 max
Melt Flow Index (ASTM D1238, Method A, 190°C / 2.16 kg)													
Melt Flow Index (g/10 min)	0.4200	0.4346									**0.4273**		1.0 max
Tensile Properties (ASTM D6693, 2 ipm strain rate)													
MD Yield Strength (ppi)	86	80	89	83	96						**87**	6	
TD Yield Strength (ppi)	87	87	91	95	80						**88**	6	
MD Break Strength (ppi)	167	150	169	167	172						**165**	9	60 min
TD Break Strength (ppi)	136	141	120	138	139						**135**	8	60 min
MD Yield Elongation (%)	15	16	22	18	20						**18**	3	
TD Yield Elongation (%)	14	13	15	16	15						**15**	1	
MD Break Elongation (%)	599	563	598	600	590						**590**	16	250 min
TD Break Elongation (%)	537	546	426	510	558						**515**	53	250 min

MD Machine Direction TD Transverse Direction

The testing herein is based upon accepted industry practice as well as the test method listed. Test results reported herein do not apply to samples other than those tested. TRI neither accepts responsibility for nor makes claim as to the final use and purpose of the material. TRI observes and maintains client confidentiality. TRI limits reproduction of this report, except in full, without prior approval of TRI.

GEOMEMBRANE TEST RESULTS
TRI Client: SCS Engineers
Project: City of Ames Ash Pond Closure 2024

Material: Solmax 40 mil Textured LLDPE Geomembrane
Sample Identification: 0105-220477
TRI Log #: 25-01426

PARAMETER	TEST REPLICATE NUMBER										MEAN	STD. DEV.	PROJ. SPEC.
	1	2	3	4	5	6	7	8	9	10			
Thickness (ASTM D5994)													
													38 min ave
Thickness (mils)	40	43	44	44	43	47	41	42	42	43	**43**	2	36, 8 of 10
											40	<< min	34 ind min

The testing herein is based upon accepted industry practice as well as the test method listed. Test results reported herein do not apply to samples other than those tested. TRI neither accepts responsibility for nor makes claim as to the final use and purpose of the material. TRI observes and maintains client confidentiality. TRI limits reproduction of this report, except in full, without prior approval of TRI.

May 27, 2025

Mail To:

Matt Albert
Clean Air & Water Systems, Inc.
P.O. Box 337
Dousman, WI 53118-0337

email: malbert@caawsystems.com

Bill To:

<= Same

Dear Mr. Albert:

Thank you for consulting TRI/Environmental, Inc. (TRI) for your geosynthetics testing needs.
TRI is pleased to submit this final report of the laboratory testing for the sample(s) listed below.

Project:	**City of Ames Ash Pond Closure**
TRI Job Reference Number:	25-02670
Material(s) Tested:	One , Solmax 40 mil Textured LLDPE Geomembrane(s)
Test(s) Requested:	Thickness (ASTM D 5994)

If you have any questions or require any additional information, please call us at 1-800-880-8378.

Sincerely,

Mansukh Patel
Laboratory Manager
Geosynthetic Services Division

*Signature is on file

The testing herein is based upon accepted industry practice as well as the test method listed. Test results reported herein do not apply to samples other than those tested. TRI neither accepts responsibility for nor makes claim as to the final use and purpose of the material. TRI observes and maintains client confidentiality. TRI limits reproduction of this report, except in full, without prior approval of TRI.

GEOMEMBRANE TEST RESULTS
TRI Client: Clean Air & Water Systems, Inc.
Project: City of Ames Ash Pond Closure

Material: Solmax 40 mil Textured LLDPE Geomembrane
Sample Identification: 0105-216930
TRI Log #: 25-02670

PARAMETER	TEST REPLICATE NUMBER										MEAN	STD. DEV.
	1	2	3	4	5	6	7	8	9	10		
Thickness (ASTM D 5994)												
Thickness (mils)	48	47	44	38	45	45	46	46	44	37	**44** **37**	4 << min

The testing herein is based upon accepted industry practice as well as the test method listed. Test results reported herein do not apply to samples other than those tested. TRI neither accepts responsibility for nor makes claim as to the final use and purpose of the material. TRI observes and maintains client confidentiality. TRI limits reproduction of this report, except in full, without prior approval of TRI.

H.2 – Interface Friction Test Results

Shear Strength of Soil-Geosynthetic Interface by Direct Shear (ASTM D5321)

Client: SCS Engineers
Project: City of Ames Ash Pond Closure 2024

TRI Log #: 24-002662-1
Richard S. Lacey, P.E. 7/15/2024
Analysis & Quality Review/Date

Soil - Sample 1 Elder Borrow (3-6') vs. Solmax 40 mil LLDPE TXGM (1005-067067)

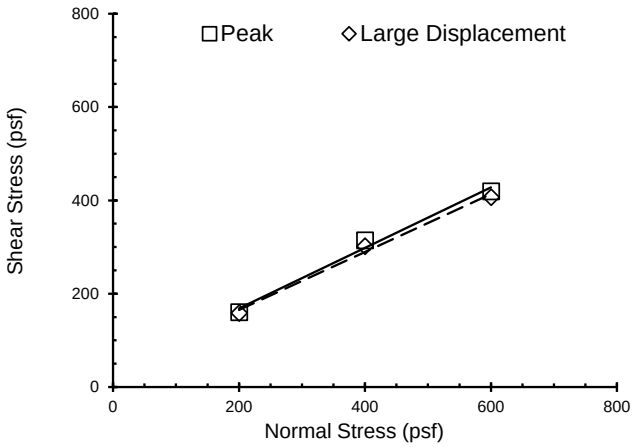

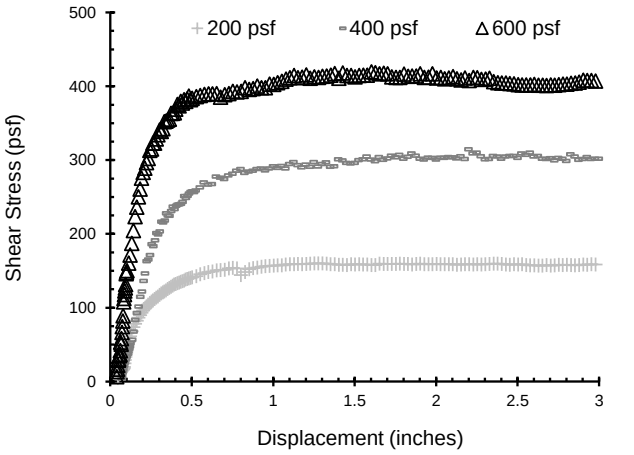

Test Results, Linear Regression			
Mohr-Coulomb Parameters		Peak	Large Displacement
Friction Angle	Degrees	33.0	31.8
Y-intercept or Adhesion	psf	39	41
Minimum Secant Angle	Degrees	35.0	34.2

Note - Large Displacement Values Reported for 3.0 inches of Displacement

Test Conditions		
Upper Box	Soil - Sample 1 Elder Borrow (3-6') Tamped in place	
Lower Box	Solmax 40 mil LLDPE TXGM (1005-067067)	
Conditioning	Spray - TXGM surface sprayed with water, soil placed and loading applied for a minimum of 24 hours prior to shear.	
Shearing Rate	inches/minute	0.004

Test Notes

Shearing occurred at the interface at all stresses.

Specimen No.		-	1	2	3
Normal Stress		psf	200	400	600
Box Edge Dimension		in	12	12	12
Bearing Slide Resistance		lbs	10	12	14
Peak	Shear Stress	psf	160	315	420
	Secant Angle	deg.	38.7	38.2	35.0
Large Displacement	Shear Stress	psf	159	302	407
	Secant Angle	deg.	38.5	37.1	34.2
Asperity Height*	Top	mils	20	19	22
	Bottom	mils	18	20	23

*Average of five measurements.

The testing herein is based upon accepted industry practice as well as the test method listed. Test results reported herein do not apply to samples other than those tested. TRI neither accepts responsibility for nor makes claim as to the final use and purpose of the material. TRI observes and maintains client confidentiality. TRI limits reproduction of this report, except in full, without prior approval of TRI.

TRI Environmental, Inc.
9063 Bee Caves Rd. – Austin, TX 78733 – USA | Ph: 800.880.TEST or 512.263.2101

Shear Strength of Geosynthetic-Geosynthetic Interface by Direct Shear (ASTM D5321)

Client: SCS Engineers
Project: City of Ames Ash Pond Closure 2024

TRI Log #: 24-002662-2

Richard S. Lacey, P.E. 7/23/2024
Analysis & Quality Review/Date

Solmax DSGC 6-340-6 (2331-635789) vs. Solmax 40 mil LLDPE TXGM (1005-067067)

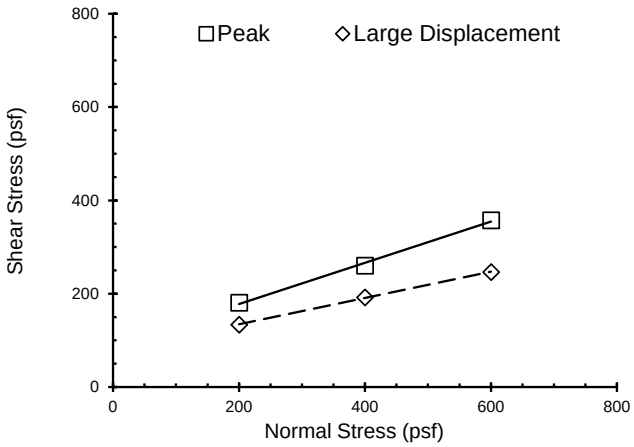

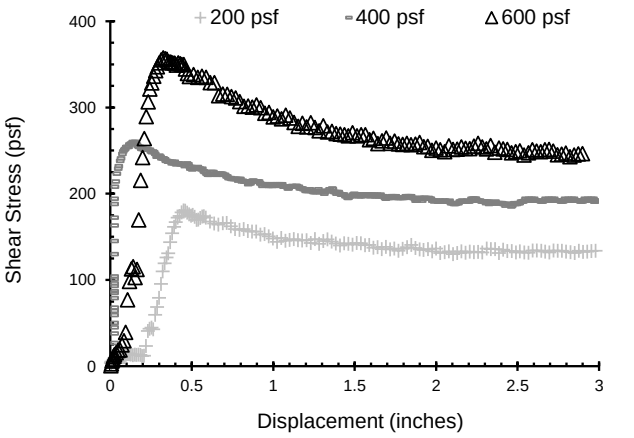

Test Results, Linear Regression			
Mohr-Coulomb Parameters		Peak	Large Displacement
Friction Angle	Degrees	23.8	15.7
Y-intercept or Adhesion	psf	89	78
Minimum Secant Angle	Degrees	30.8	22.3

Note - Large Displacement Values Reported for 3.0 inches of Displacement

Test Conditions		
Upper Box	Solmax DSGC 6-340-6 (2331-635789)	
Lower Box	Solmax 40 mil LLDPE TXGM (1005-067067)	
Conditioning	Wet - Loading applied and Interface flooded for a minimum of 2 hours prior to shear.	
Shearing Rate	inches/minute	0.2

Test Notes

Shearing occurred at the interface at all stresses.

Specimen No.		-	1	2	3
Normal Stress		psf	200	400	600
Box Edge Dimension		in	12	12	12
Bearing Slide Resistance		lbs	10	12	14
Peak	Shear Stress	psf	181	260	358
	Secant Angle	deg.	42.1	33.0	30.8
Large Displacement	Shear Stress	psf	134	192	247
	Secant Angle	deg.	33.8	25.7	22.3
Asperity Height*	Top	mils	16	16	16
	Bottom	mils	15	17	16

*Average of five measurements.

The testing herein is based upon accepted industry practice as well as the test method listed. Test results reported herein do not apply to samples other than those tested. TRI neither accepts responsibility for nor makes claim as to the final use and purpose of the material. TRI observes and maintains client confidentiality. TRI limits reproduction of this report, except in full, without prior approval of TRI.

TRI Environmental, Inc.
9063 Bee Caves Rd. – Austin, TX 78733 – USA | Ph: 800.880.TEST or 512.263.2101

Shear Strength of Soil-Geosynthetic Interface by Direct Shear (ASTM D5321)

Client: JB Holland Construction, Inc
Project: City of Ames

TRI Log #: 25-00310-1
Richard S. Lacey, P.E. 1/31/2025
Analysis & Quality Review/Date

Ash (onsite) vs.
Solmax 40 mil LLDPE TXGM (1005-067067)

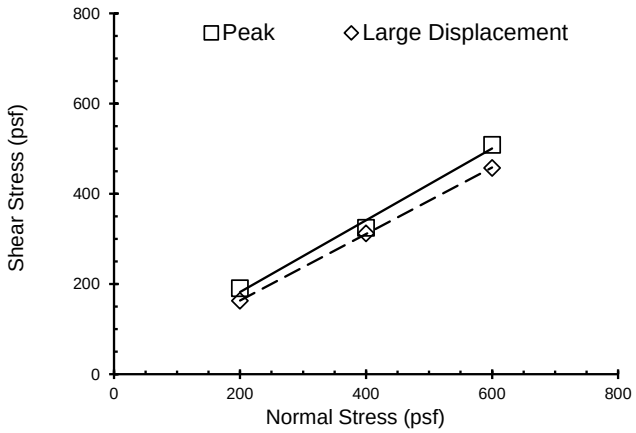

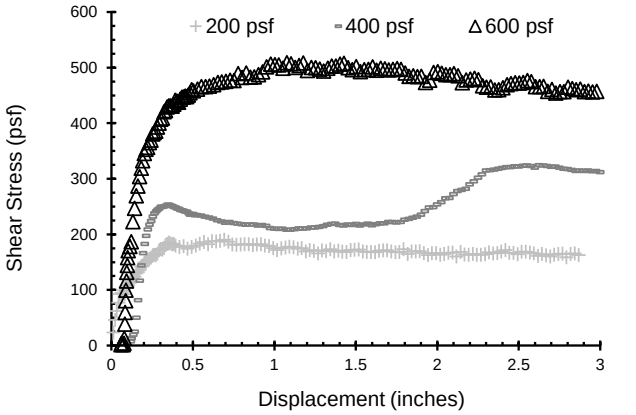

Test Results, Linear Regression			
Mohr-Coulomb Parameters		Peak	Large Displacement
Friction Angle	Degrees	38.5	36.4
Y-intercept or Adhesion	psf	23	16
Minimum Secant Angle	Degrees	39.0	37.3

Note - Large Displacement Values Reported for 3.0 inches of Displacement

Test Conditions		
Upper Box	Ash (onsite) Tamped in place	
Lower Box	Solmax 40 mil LLDPE TXGM (1005-067067)	
Conditioning	Spray - TXGM surface sprayed with water, soil placed and loading applied for a minimum of 24 hours prior to shear.	
Shearing Rate	inches/minute	0.004

Test Notes

Shearing occurred at the interface at all stresses.

Specimen No.		-	1	2	3
Normal Stress		psf	200	400	600
Box Edge Dimension		in	12	12	12
Bearing Slide Resistance		lbs	10	12	14
Peak	Shear Stress	psf	191	324	509
	Secant Angle	deg.	43.6	39.0	40.3
Large Displacement	Shear Stress	psf	163	312	458
	Secant Angle	deg.	39.1	38.0	37.3
Asperity Height, Avg. of 5 Meas.		mils	22	22	21

The testing herein is based upon accepted industry practice as well as the test method listed. Test results reported herein do not apply to samples other than those tested. TRI neither accepts responsibility for nor makes claim as to the final use and purpose of the material. TRI observes and maintains client confidentiality. TRI limits reproduction of this report, except in full, without prior approval of TRI.

TRI Environmental, Inc.
9063 Bee Caves Rd. – Austin, TX 78733 – USA | Ph: 800.880.TEST or 512.263.2101

Shear Strength of Soil-Geosynthetic Interface by Direct Shear (ASTM D5321)

Client: JB Holland Construction, Inc
Project: City of Ames

TRI Log #: 25-00310-1
Richard S. Lacey, P.E. 1/27/2025
Analysis & Quality Review/Date

Ash (onsite) vs.
Solmax 40 mil LLDPE TXGM (1005-067067)

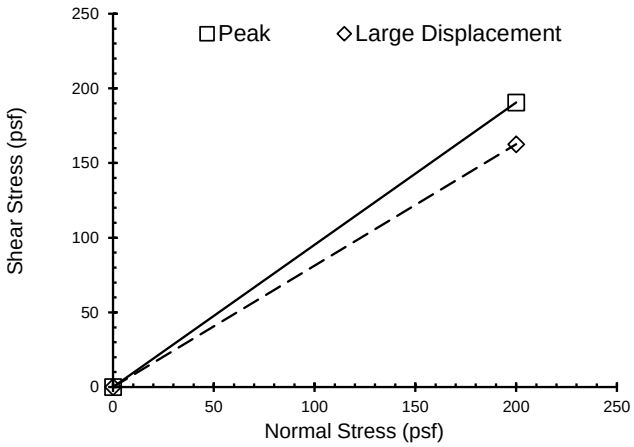

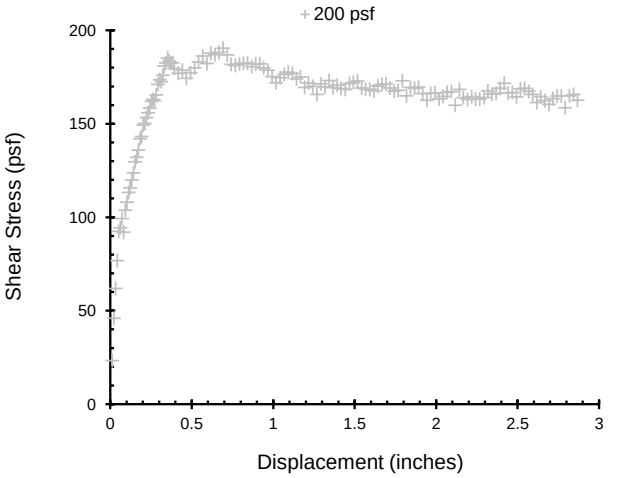

Test Results			
Single Point Test Results		Peak	Large Displacement
Secant Angle	Degrees	43.6	39.1
Shear Stress	psf	191	163

Note - Large Displacement Value Reported for 3.0 inches of Displacement

Test Conditions		
Upper Box	Ash (onsite) Tamped in place	
Lower Box	Solmax 40 mil LLDPE TXGM (1005-067067)	
Conditioning	Spray - TXGM surface sprayed with water, soil placed and loading applied for a minimum of 24 hours prior to shear.	
Shearing Rate	inches/minute	0.004

Test Notes

Shearing occurred at the interface.

Specimen No.		-	1
Normal Stress		psf	200
Box Edge Dimension		in	12
Bearing Slide Resistance		lbs	10
Peak	Shear Stress	psf	191
	Secant Angle	deg.	43.6
Large Displacement	Shear Stress	psf	163
	Secant Angle	deg.	39.1

The testing herein is based upon accepted industry practice as well as the test method listed. Test results reported herein do not apply to samples other than those tested. TRI neither accepts responsibility for nor makes claim as to the final use and purpose of the material. TRI observes and maintains client confidentiality. TRI limits reproduction of this report, except in full, without prior approval of TRI.

TRI ENVIRONMENTAL, INC.
9063 BEE CAVES RD. – AUSTIN, TX 78733 – USA | PH: 800.880.TEST OR 512.263.2101

Appendix I

Geosynthetic Materials Installation Documentation

I.1 – Geosynthetic Preinstallation Meeting

Geosynthetics Pre-Installation Meeting Notes
City of Ames Municipal Electric System
Ash Pond Closure
May 19, 2025 – 8:00 a.m.

Location: Ames Electric Power Plant Meeting Room (200 E 5th St, Ames, IA 50010-6306)

Participants: Kris Evans, City of Ames
Bill Holland, JB Holland
Kole, JB Holland
Chris Calhoun, SCS Engineers
Marty Sturzl, SCS Engineers (via Microsoft Teams)
Matt Kuhlenengel, SCS Engineers
Representatives from Clean Air and Water Systems (CAAW) – Jimmy Garcia

Purpose: Geosynthetic Pre-Installation Meeting

Topics for Discussion:

1) Personnel
   a) Installer's onsite supervisor? Jimmy Garcia – (936) 676-5440
   b) Crew (size)? 12-13 People

2) Schedule
   a) Working hours?
      i) As long as possible, starting at 6 a.m.
      ii) Bill will provide a key for the access gate
   b) Site access – Northwest corner of site. Access from 13th street.
   c) Jimmy stated that they are scheduled for the job to take 5-6 days. They are planning to work through the holiday weekend as required.
   d) For General Contractor work on the weekend, contact Kole (563) 379-3994 or Bill (563) 379-3001

3) Health and Safety
   a) Roll handling
   b) No smoking on property
   c) Safety vests and hard hats
   d) There is an active power line around the areas for equipment unloading. Be aware and use caution.
   e) CAAW will use a flagman as need during staging of material and when they would encounter cross-traffic of the site.

4) Subgrade Acceptance
   a) Acceptable weather conditions
      i) Temperature – 32° F to 104° F
      ii) Wind – Adequate protection
      iii) Precipitation – Geomembrane needs to be free of moisture (dry)
   b) Surface, free of rocks and debris
   c) Subgrade Acceptance Form, provide scanned, signed copies to CAAW when available.

5) Deployment
   a) Panel layout, see attached
      i) Orientation
      ii) Direction
      iii) Horizontal seams, not allowed on 4:1 slope
      iv) Deployment equipment (telehandler, skid steer, etc.)
   b) Deployment from top to bottom, or plan on how to keep tension on the geosynthetics.
   c) Anchor Trench Seam
      i) Due to limits of ash excavation, geomembrane should be continued through the bottom of the anchor trench.

6) Seaming Methods
   a) Trial welds
      i) Tensiometer Calibration Certificate (within the last 90 days)
      ii) Every six hours (intended to be twice per day, one in the morning and one after lunch)
      iii) 3'x1', with centered seam
      iv) Initial testing is 3 coupons. If any 1 fails, 2 additional coupons from each end of sample. If either of those fails, machine and welder rejected until deficiency is corrected and trial weld repeated.

7) Protection of Liner
   a) Sand Bags – Wind Protection
   b) Anchor Trench – Stormwater Protection

8) Seam Testing
   a) Non-destructive testing
      i) Fusion – Air Testing
      ii) Extrusion – Vacuum Box
   b) Destructive Testing – Every 500 linear feet
      i) Field Testing – 5 out of 5 must pass Peel and Shear
      ii) Lab Testing – 5 out of 5 must pass Peel, Sheer, and Elongation
      iii) Failed Destructs
         (1) Seam reconstruction between destructs
         (2) Seam back-tracing, minimum 10-foot increments

9) Geocomposite Installation
   a) Methods
      i) Geotextile
         (1) 4-6" overlap
         (2) Sewn
      ii) Geonet
         (1) 4" overlap
         (2) Pull ties at 5-foot intervals for longitudinal seams. 12-inch intervals for end seams

10) Cover Protective Soil
   a) Pushed from bottom
   b) No neutral turns.

11) Miscellaneous
    a) Parking
    b) Restrooms
    c) SCS will look into whether equipment is allowed on the geomembrane.

G:\Project\27219356.02\Data and Calculations\CQA Documents\Geosynthetics\Geosynthetic Preinstallation Meeting Notes.docx

I.2 – Subgrade Acceptance Forms

CERTIFICATE OF ACCEPTANCE OF SUBGRADE SURFACE PREPARATION FOR GEOSYNTHETICS INSTALLATION

PROJECT NAME: City of Ames Ash Pond Closure

PROJECT NUMBER: 27219356.02

CLIENT: City of Ames Municipal Electric System

AREA ACCEPTED: P-1 through P-28

COMMENTS: North Side & Northeast corner

INSTALLER: The undersigned authorized representative of Clean Air and Water Systems certifies that he or she has visually inspected the subgrade surface of the area described above and has found the surface to be acceptable for installation of the geosynthetic materials.

Clean Air and Water Systems shall be responsible for the integrity of finished geosynthetic material until completion of the installation or demobilization from the site.

This certification is based on observations of the subgrade surface conditions only. Clean Air and Water Systems has made no sub terrain inspections or tests and makes no representations or warranties as to the conditions that may exist below the surface of the subgrade.

	Installers Acceptance		Inspectors Acceptance
Company:	Clean Air and Water Systems	**Company:**	SCS Engineers
Name:	Jimmy Garcia	**Name:**	Chris Calhoun / Matt Kahlenenge/
Title:	Supervi.	**Title:**	Project Professional/CQA Technician
Date:	5-23-25	**Date:**	5/23/25

G:\Project\27219356.02\Data and Calculations\CQA Documents\Geosynthetics\Subgrade Acceptance Form Template.docx

CERTIFICATE OF ACCEPTANCE OF SUBGRADE SURFACE PREPARATION FOR GEOSYNTHETICS INSTALLATION

PROJECT NAME: City of Ames Ash Pond Closure

PROJECT NUMBER: 27219356.02

CLIENT: City of Ames Municipal Electric System

AREA ACCEPTED: P-29 through P-58

COMMENTS: Northwest corner and southeast corner

INSTALLER: The undersigned authorized representative of Clean Air and Water Systems certifies that he or she has visually inspected the subgrade surface of the area described above and has found the surface to be acceptable for installation of the geosynthetic materials.

Clean Air and Water Systems shall be responsible for the integrity of finished geosynthetic material until completion of the installation or demobilization from the site.

This certification is based on observations of the subgrade surface conditions only. Clean Air and Water Systems has made no sub terrain inspections or tests and makes no representations or warranties as to the conditions that may exist below the surface of the subgrade.

	Installers Acceptance		Inspectors Acceptance
Company:	Clean Air and Water Systems	**Company:**	SCS Engineers
Name:	Jimmy Garcia	**Name:**	Chris Calhoun
Title:	Super	**Title:**	Project Professional/CQA Technician
Date:	5-24-25	**Date:**	5/24/25

G:\Project\27219356.02\Data and Calculations\CQA Documents\Geosynthetics\Subgrade Acceptance Form Template.docx

CERTIFICATE OF ACCEPTANCE OF SUBGRADE SURFACE PREPARATION FOR GEOSYNTHETICS INSTALLATION

PROJECT NAME: City of Ames Ash Pond Closure

PROJECT NUMBER: 27219356.02

CLIENT: City of Ames Municipal Electric System

AREA ACCEPTED: P-59 through P-78

COMMENTS: Southwest corner

INSTALLER: The undersigned authorized representative of Clean Air and Water Systems certifies that he or she has visually inspected the subgrade surface of the area described above and has found the surface to be acceptable for installation of the geosynthetic materials.

Clean Air and Water Systems shall be responsible for the integrity of finished geosynthetic material until completion of the installation or demobilization from the site.

This certification is based on observations of the subgrade surface conditions only. Clean Air and Water Systems has made no sub terrain inspections or tests and makes no representations or warranties as to the conditions that may exist below the surface of the subgrade.

	Installers Acceptance		Inspectors Acceptance
Company:	Clean Air and Water Systems	**Company:**	SCS Engineers
Name:	Jimmy Garcia	**Name:**	Chris Calhoun
Title:	Super.	**Title:**	Project Professional/CQA Technician
Date:	5-25-25	**Date:**	5/25/25

G:\Project\27219356.02\Data and Calculations\CQA Documents\Geosynthetics\Subgrade Acceptance Form Template.docx

CERTIFICATE OF ACCEPTANCE OF SUBGRADE SURFACE PREPARATION FOR GEOSYNTHETICS INSTALLATION

PROJECT NAME: City of Ames Ash Pond Closure

PROJECT NUMBER: 27219356.02

CLIENT: City of Ames Municipal Electric System

AREA ACCEPTED: P-79

COMMENTS: Center of East and West slope and across peak.

INSTALLER: The undersigned authorized representative of Clean Air and Water Systems certifies that he or she has visually inspected the subgrade surface of the area described above and has found the surface to be acceptable for installation of the geosynthetic materials.

Clean Air and Water Systems shall be responsible for the integrity of finished geosynthetic material until completion of the installation or demobilization from the site.

This certification is based on observations of the subgrade surface conditions only. Clean Air and Water Systems has made no sub terrain inspections or tests and makes no representations or warranties as to the conditions that may exist below the surface of the subgrade.

	Installers Acceptance		Inspectors Acceptance
Company:	Clean Air and Water Systems	**Company:**	SCS Engineers
Name:	Super. Jimmy Garcia	**Name:**	Chris Calhoun
Title:	Super.	**Title:**	Project Professional/CQA Technician
Date:	5-31-25	**Date:**	5/31/25

G:\Project\27219356.02\Data and Calculations\CQA Documents\Geosynthetics\Subgrade Acceptance Form Template.docx

I.3 – Geomembrane Panel Map

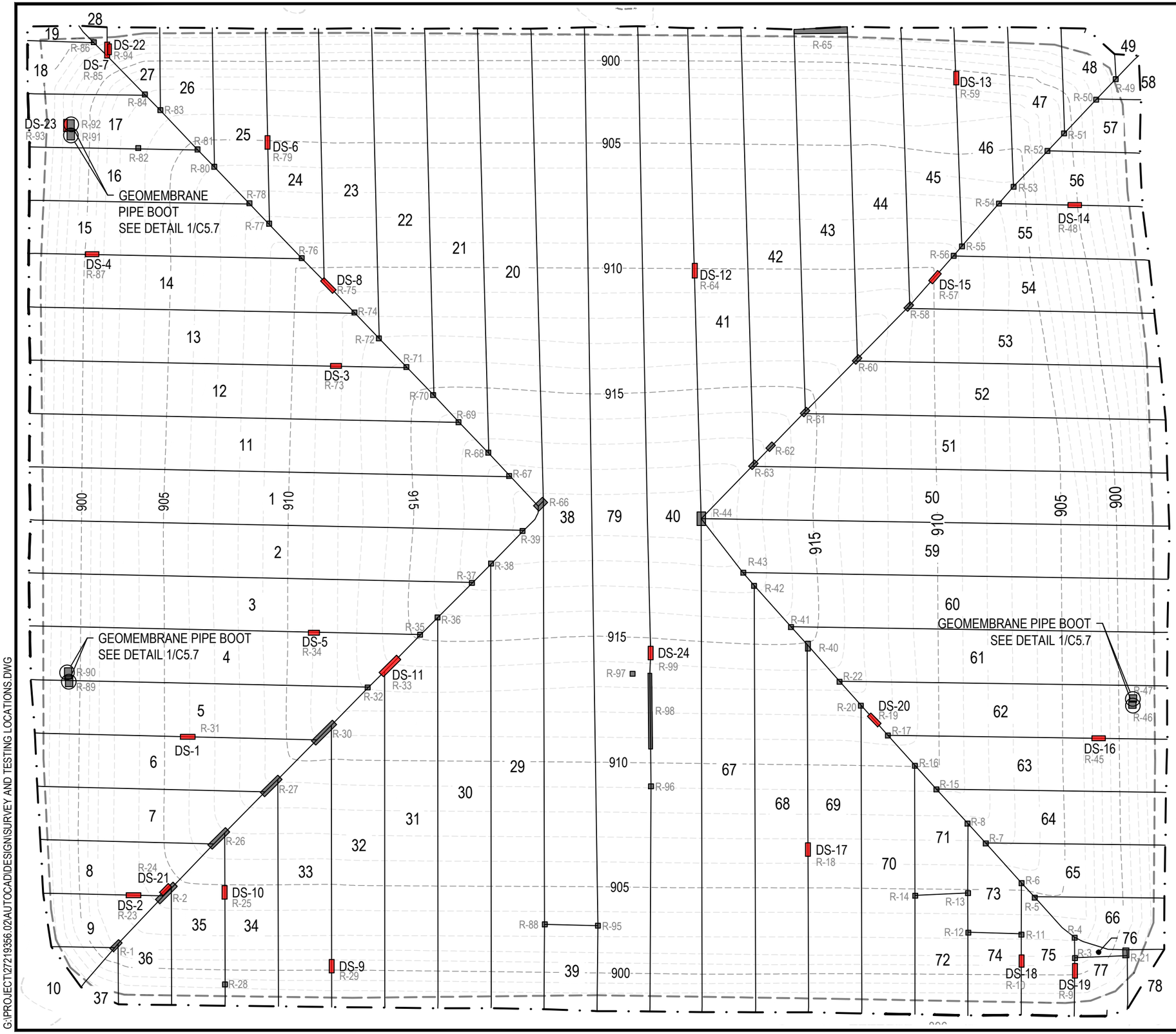

LEGEND

- 1' CONTOUR
- 910 5' CONTOUR
- LIMITS OF ASH
- LIMITS OF GEOMEMBRANE
- 38 PANEL NUMBER
- DS-12 DESTRUCT NUMBER
- R-17 REPAIR LOCATION

NOTES:

1. TOTAL PLAN VIEW AREA OF DEPLOYED GEOMEMBRANE = 184,742 SQ. FT.
2. CONTOURS REPRESENT THE TOP OF ASH SURVEYED BY SCS ENGINEERS PRIOR TO DEPLOYMENT ON MAY 23, 2025.

REV.	DATE	CK BY

SHEET TITLE: **GEOMEMBRANE PANEL MAP**

PROJECT TITLE: **AMES ASH POND CLOSURE**

CLIENT: **CITY OF AMES**
200 EAST 5TH STREET
AMES ASH POND

SCS ENGINEERS
1475
PH. (402) 884-6202 FAX. (913) 681-0012

PROJ. NO. | DSN. BY: | CHK. BY: | PROJ. MGR. MRS

CADD FILE: SURVEY AND TESTING LOCATIONS.DWG

DATE: 6/3/25

DRAWING NO.

G:\PROJECT\27219356.02\AUTOCAD\DESIGN\SURVEY AND TESTING LOCATIONS.DWG

I.4 – Project Information

GENERAL

Project Information

Client	City of Ames
Project Location *(line 1)*	Ames Ash Pond
Project Location *(line 2)*	200 East 5th Street, Ames, IA
SCS Engineers Project Number	27219356.02
SCS Engineers Project Name *(line 1)*	Ames Ash Pond Closure
SCS Engineers Project Name *(line 2)*	

SCS Engineers CQA Personnel

Field Technicians *(line 1)*	Chris Calhoun
Field Technicians *(line 2)*	Matt Kuhlenengel
Primary Reviewer	Matt Kuhlenengel
Secondary Reviewer	Marty Sturzl
Professional Engineer	Mark Huber
Project Manager	Marty Sturzl

Geomembrane Installer Personnel

Geomembrane Contractor	Clean Air and Water Systems
Contact Individual	
Phone Number	
Geomembrane Testing Laboratory	TRI Environmental
Contact Individual	
Phone Number	

Scope of Project

Type of Construction (Final Cover, Cell, etc..)	Final Cover (LLDPE)	
Approximate Acreage	4.2	acres

GEOMEMBRANE REQUIREMENTS (See Note)

General Information

Geomembrane Type	40 MIL LLDPE		Material Inventory - Geomembrane
Geomembrane Thickness	40	mils	
Geomembrane Type	LLDPE		
Minimum Trial Weld Frequency	1 per every 6	hours	
Number of tests per Trial Weld sample	3	tests per trial weld	

Minimum Destruct Frequency *(check all applicable in accordance with Site CQA Plan)*					
	x	1 per every	500	feet per total seam	If required Destruct Frequency is **"per machine per welder"**, must check manually.
		1 per every	500	feet per total repair seam	
	x	1 per every	500	feet per machine	
		1 per every	500	feet per welder	

Testing Requirements

Geomembrane Testing

Weld Type		Fusion			Extrusion	
Peel (P)	≥	50	ppi	≥	44	ppi
Shear (S)	≥	60	ppi	≥	60	ppi
Maximum # Failing Tests allowed per P/S test		0	each test			
Is 'End of Seam' Field Destruct Required (Wisconsin Only) (Y or N)?		N		Length	100 ft	
		50				
		60				
		0				

Air Pressure Testing

Sustaining Pressure	27		30	psi	
Minimum Time to Sustain Pressure	2	minutes			
Allowable Pressure Difference	± 4	psi	(or does not stabilize)		

GEOMEMBRANE CONTRACTOR INFORMATION

Information for Drop Down Menu, fill in applicable spaces. Leave the hyphen (-) in the blank cells.

Machine Numbers	Installer QC Initials	Seamer Initials	Repairer Initials	Tester Initials
6416	YC	JV	JS	ASB
6421	-	JOV	JV	JEL
7541	-	JS	JG	JL
7542	-	JG	-	YC
076	-	-	-	-
-	-	-	-	-
-	-	-	-	-
-	-	-	-	-
-	-	-	-	-
-	-	-	-	-
-	-	-	-	-
-	-	-	-	-
-	-	-	-	-
-	-	-	-	-
-	-	-	-	-
-	-	-	-	-
-	-	-	-	-
-	-	-	-	-
-	-	-	-	-
-	-	-	-	-
-	-	-	-	-

MATERIAL INVENTORY SHEETS - Additional

Additional Material Inventory Sheets - Use As Needed for Project

Material Inventory 2 - Material Type	Geocomposite Drainage Layer	Use as needed for project. Materials may include GCL, geocomposite, geotextile, etc.
Material Inventory 3 - Material Type	Material Type 3	
Material Inventory 4 - Material Type	Material Type 4	
Material Inventory 5 - Material Type	Material Type 5	

I.5 – Material Inventory Record

MATERIAL INVENTORY RECORD

SCS Engineers CQA Technician: Chris Calhoun
Matt Kuhlenengel

Client Name: City of Ames
Project Location: Ames Ash Pond
200 East 5th Street, Ames, IA

SCS Engineers Project Name: Ames Ash Pond Closure
SCS Engineers Project Number: 27219356.02

Material Type: 40 MIL LLDPE

Date Received	Roll No.	Lot/ Batch	Roll Size			QC Docs Received	Remarks (Tech #)
			Width (ft)	Length (ft)	Area (sq. ft)		
04/28/25	0105-220465	24KB618	22.5	700	15750	Y	On-site
04/28/25	0105-220466	24KB618	22.5	700	15750	Y	On-site
04/28/25	0105-220467	24KB618	22.5	700	15750	Y	On-site
04/28/25	0105-220468	24KB618	22.5	700	15750	Y	On-site
04/28/25	0105-220469	24KB618	22.5	700	15750	Y	On-site
04/28/25	0105-220470	24KB618	22.5	700	15750	Y	On-site
04/28/25	0105-220471	24KB618	22.5	700	15750	Y	On-site
04/28/25	0105-220472	24KB618	22.5	700	15750	Y	On-site
04/28/25	0105-220473	24KB618	22.5	700	15750	Y	On-site
04/28/25	0105-220474	24KB618	22.5	700	15750	Y	On-site
04/28/25	0105-220475	24KB618	22.5	700	15750	Y	On-site
04/28/25	0105-220476	24KB618	22.5	700	15750	Y	On-site
04/29/25	0105-216930	24BB573	22.5	700	15750	Y	On-site
04/29/25	0105-220477	24KB618	22.5	700	15750	Y	On-site

MATERIAL INVENTORY RECORD

SCS Engineers CQA Technician: Chris Calhoun
Matt Kuhlenengel

Client Name: City of Ames
Project Location: Ames Ash Pond
200 East 5th Street, Ames, IA

SCS Engineers Project Name: Ames Ash Pond Closure
SCS Engineers Project Number: 27219356.02

Material Type: Geocomposite Drainage Layer

Date Received	Roll No.	Lot/ Batch	Roll Size			QC Docs Received	Remarks (Tech #)
			Width (ft)	Length (ft)	Area (sq. ft)		
04/04/25	0116-068704	DSB610021	15	160	2400	Y	On-site
04/04/25	0116-068705	DSB610021	15	160	2400	Y	On-site
04/04/25	0116-068708	DSB610021	15	160	2400	Y	On-site
04/04/25	0116-068709	DSB610021	15	160	2400	Y	On-site
04/04/25	0116-068710	DSB610021	15	160	2400	Y	On-site
04/04/25	0116-068711	DSB610021	15	160	2400	Y	On-site
04/04/25	0116-068712	DSB610021	15	160	2400	Y	On-site
04/04/25	0116-068713	DSB610021	15	160	2400	Y	On-site
04/04/25	0116-068714	DSB610021	15	160	2400	Y	On-site
04/04/25	0116-068715	DSB610021	15	160	2400	Y	On-site
04/04/25	0116-068716	DSB610020	15	160	2400	Y	On-site
04/04/25	0116-068724	DSB610020	15	160	2400	Y	On-site
04/04/25	0116-068725	DSB610020	15	160	2400	Y	On-site
04/04/25	0116-068726	DSB610020	15	160	2400	Y	On-site
04/04/25	0116-068727	DSB610020	15	160	2400	Y	On-site
04/04/25	0116-068728	DSB610020	15	160	2400	Y	On-site
04/04/25	0116-068729	DSB610020	15	160	2400	Y	On-site
04/04/25	0116-068730	DSB610020	15	160	2400	Y	On-site
04/04/25	0116-068731	DSB610020	15	160	2400	Y	On-site

MATERIAL INVENTORY RECORD

SCS Engineers CQA Technician: Chris Calhoun
Matt Kuhlenengel

Client Name: City of Ames
Project Location: Ames Ash Pond
200 East 5th Street, Ames, IA

SCS Engineers Project Name: Ames Ash Pond Closure
SCS Engineers Project Number: 27219356.02

Material Type: Geocomposite Drainage Layer

Date Received	Roll No.	Lot/ Batch	Roll Size			QC Docs Received	Remarks (Tech #)
			Width (ft)	Length (ft)	Area (sq. ft)		
04/04/25	0116-068732	DSB610020	15	160	2400	Y	On-site
04/04/25	0116-068733	DSB610020	15	160	2400	Y	On-site
04/04/25	0116-068734	DSB610020	15	160	2400	Y	On-site
04/04/25	0116-068735	DSB610020	15	160	2400	Y	On-site
04/04/25	0116-068736	DSB610020	15	160	2400	Y	On-site
04/04/25	0116-068737	DSB610020	15	160	2400	Y	On-site
04/04/25	0116-068738	DSB610020	15	160	2400	Y	On-site
04/04/25	0116-068739	DSB610020	15	160	2400	Y	On-site
04/04/25	0116-068740	DSB610020	15	160	2400	Y	On-site
04/04/25	0116-068741	DSB610020	15	160	2400	Y	On-site
04/04/25	0116-068742	DSB610020	15	160	2400	Y	On-site
04/04/25	0116-068743	DSB610020	15	160	2400	Y	On-site
04/04/25	0116-068744	DSB610020	15	160	2400	Y	On-site
04/04/25	0116-068745	DSB610020	15	160	2400	Y	On-site
04/04/25	0116-068746	DSB610020	15	160	2400	Y	On-site
04/04/25	0116-068747	DSB610020	15	160	2400	Y	On-site
04/04/25	0116-068748	DSB610020	15	160	2400	Y	On-site
04/04/25	0116-068749	DSB610020	15	160	2400	Y	On-site
04/04/25	0116-068750	DSB610020	15	160	2400	Y	On-site

MATERIAL INVENTORY RECORD

SCS Engineers CQA Technician: Chris Calhoun
Matt Kuhlenengel

Client Name: City of Ames
Project Location: Ames Ash Pond
200 East 5th Street, Ames, IA

SCS Engineers Project Name: Ames Ash Pond Closure
SCS Engineers Project Number: 27219356.02

Material Type: Geocomposite Drainage Layer

Date Received	Roll No.	Lot/ Batch	Roll Size			QC Docs Received	Remarks (Tech #)
			Width (ft)	Length (ft)	Area (sq. ft)		
04/04/25	0116-068751	DSB610020	15	160	2400	Y	On-site
04/04/25	0116-068752	DSB610020	15	160	2400	Y	On-site
04/04/25	0116-068753	DSB610020	15	160	2400	Y	On-site
04/04/25	0116-068754	DSB610020	15	160	2400	Y	On-site
04/04/25	0116-068755	DSB610020	15	160	2400	Y	On-site
04/04/25	0116-068756	DSB610020	15	160	2400	Y	On-site
04/04/25	0116-068757	DSB610020	15	160	2400	Y	On-site
04/04/25	0116-068758	DSB610020	15	160	2400	Y	On-site
04/04/25	0116-068759	DSB610020	15	160	2400	Y	On-site
04/04/25	0116-068760	DSB610020	15	160	2400	Y	On-site
04/04/25	0116-068761	DSB610020	15	160	2400	Y	On-site
04/04/25	0116-068762	DSB610020	15	160	2400	Y	On-site
04/04/25	0116-068763	DSB610020	15	160	2400	Y	On-site
04/04/25	0116-068764	DSB610020	15	160	2400	Y	On-site
04/04/25	0116-068765	DSB610020	15	160	2400	Y	On-site
04/04/25	0116-068766	DSB610020	15	160	2400	Y	On-site
04/04/25	0116-068767	DSB610020	15	160	2400	Y	On-site
04/04/25	0116-068768	DSB610020	15	160	2400	Y	On-site
04/04/25	0116-068769	DSB610020	15	160	2400	Y	On-site

MATERIAL INVENTORY RECORD

SCS Engineers CQA Technician: Chris Calhoun
Matt Kuhlenengel

Client Name: City of Ames
Project Location: Ames Ash Pond
200 East 5th Street, Ames, IA

SCS Engineers Project Name: Ames Ash Pond Closure
SCS Engineers Project Number: 27219356.02

Material Type: Geocomposite Drainage Layer

Date Received	Roll No.	Lot/ Batch	Roll Size			QC Docs Received	Remarks (Tech #)
			Width (ft)	Length (ft)	Area (sq. ft)		
04/04/25	0116-068770	DSB610020	15	160	2400	Y	On-site
04/04/25	0116-068771	DSB610020	15	160	2400	Y	On-site
04/04/25	0116-068772	DSB610020	15	160	2400	Y	On-site
04/04/25	0116-068773	DSB610020	15	160	2400	Y	On-site
04/04/25	0116-068774	DSB610020	15	160	2400	Y	On-site
04/04/25	0116-068775	DSB610020	15	160	2400	Y	On-site
04/04/25	0116-068776	DSB610020	15	160	2400	Y	On-site
04/04/25	0116-068777	DSB610020	15	160	2400	Y	On-site
04/04/25	0116-068778	DSB610020	15	160	2400	Y	On-site
04/04/25	0116-068779	DSB610020	15	160	2400	Y	On-site
04/04/25	0116-068780	DSB610020	15	160	2400	Y	On-site
04/04/25	0116-068781	DSB610020	15	160	2400	Y	On-site
04/04/25	0116-068782	DSB610020	15	160	2400	Y	On-site
04/04/25	0116-068783	DSB610020	15	160	2400	Y	On-site
04/04/25	0116-068784	DSB610020	15	160	2400	Y	On-site
04/04/25	0116-068785	DSB610020	15	160	2400	Y	On-site
04/04/25	0116-068786	DSB610020	15	160	2400	Y	On-site
04/04/25	0116-068787	DSB610020	15	160	2400	Y	On-site
04/04/25	0116-068798	DSB610020	15	160	2400	Y	On-site

MATERIAL INVENTORY RECORD

SCS Engineers CQA Technician: Chris Calhoun
Matt Kuhlenengel

Client Name: City of Ames
Project Location: Ames Ash Pond
200 East 5th Street, Ames, IA

SCS Engineers Project Name: Ames Ash Pond Closure
SCS Engineers Project Number: 27219356.02

Material Type: Geocomposite Drainage Layer

Date Received	Roll No.	Lot/ Batch	Roll Size			QC Docs Received	Remarks (Tech #)
			Width (ft)	Length (ft)	Area (sq. ft)		
04/04/25	0116-068799	DSB610020	15	160	2400	Y	On-site
04/04/25	0116-068800	DSB610020	15	160	2400	Y	On-site
04/04/25	0116-068801	DSB610020	15	160	2400	Y	On-site
04/04/25	0116-068802	DSB610020	15	160	2400	Y	On-site
04/04/25	0116-068803	DSB610020	15	160	2400	Y	On-site
04/04/25	0116-068804	DSB610020	15	160	2400	Y	On-site
04/04/25	0116-068805	DSB610020	15	160	2400	Y	On-site
04/04/25	0116-068806	DSB610020	15	160	2400	Y	On-site
04/04/25	0116-068807	DSB610020	15	160	2400	Y	On-site
04/04/25	0116-068808	DSB610020	15	160	2400	Y	On-site
04/04/25	0116-068809	DSB610020	15	160	2400	Y	On-site
04/04/25	0116-068810	DSB610020	15	160	2400	Y	On-site
04/04/25	0116-068811	DSB610020	15	160	2400	Y	On-site
04/04/25	0116-068812	DSB610020	15	160	2400	Y	On-site

I.6 – Geosynthetic Panel Placement Record

GEOSYNTHETIC PANEL PLACEMENT RECORD

SCS Engineers CQA Technician: Chris Calhoun
Matt Kuhlenengel

Client Name: City of Ames
Project Location: Ames Ash Pond
200 East 5th Street, Ames, IA

SCS Engineers Project Name: Ames Ash Pond Closure
SCS Engineers Project Number: 27219356.02

Date dd-mmm-yy	Time hhmm (24)	Panel Number	Roll Number	Panel Length (feet)	Panel Width (feet)	Panel Location/Comments (Tech #)
23-May-25	1311	1	0105-220476	215	22.5	Runs N-S in the middle of the N slope.
23-May-25	1321	2	0105-220476	215	22.5	Runs N-S on N Slope, W of P-1
23-May-25	1330	3	0105-220476	189	22.5	Runs N-S on N Slope, W of P-2
23-May-25	1340	4	0105-220467	171	22.5	Runs N-S on N Slope, W of P-3
23-May-25	1346	5	0105-220467	149	22.5	Runs N-S on N Slope, W of P-4
23-May-25	1351	6	0105-220467	123	22.5	Runs N-S on N Slope, W of P-5
23-May-25	1356	7	0105-220467	100	22.5	Runs N-S on N Slope, W of P-6
23-May-25	1400	8	0105-220467	77	22.5	Runs N-S on N Slope, W of P-7
23-May-25	1405	9	0105-220467	55	22.5	Runs N-S on N Slope, W of P-8
23-May-25	1410	10	0105-220467	35	20.5	W of P-9, Triangle in NW Corner
23-May-25	1450	11	0105-220469	205	22.5	Runs N-S on N Slope, E of P-1
23-May-25	1500	12	0105-220469	185	22.5	Runs N-S on N Slope, E of P-11
23-May-25	1506	13	0105-220469	161	22.5	Runs N-S on N Slope, E of P-12
23-May-25	1512	14	0105-220469	140	22.5	Runs N-S on N Slope, E of P-13
23-May-25	1522	15	0105-220471	120	22.5	Runs N-S on N Slope, E of P-14
23-May-25	1530	16	0105-220471	95	22.5	Runs N-S on N Slope, E of P-15
23-May-25	1537	17	0105-220471	78	22.5	Runs N-S on N Slope, E of P-16
23-May-25	1545	18	0105-220471	51	22.5	Runs N-S on N Slope, E of P-17
23-May-25	1610	19	0105-220471	28	6	E of P-18, Edge in NE Corner

GEOSYNTHETIC PANEL PLACEMENT RECORD

SCS Engineers CQA Technician: Chris Calhoun
Matt Kuhlenengel

Client Name: City of Ames
Project Location: Ames Ash Pond
200 East 5th Street, Ames, IA

SCS Engineers Project Name: Ames Ash Pond Closure
SCS Engineers Project Number: 27219356.02

Date dd-mmm-yy	Time hhmm (24)	Panel Number	Roll Number	Panel Length (feet)	Panel Width (feet)	Panel Location/Comments (Tech #)
23-May-25	1643	20	0105-220471	204	22.5	Runs E-W on E slope just N of closure peak
23-May-25	1700	21	0105-220477	184	22.5	Runs E-W on E slope, N of P-20
23-May-25	1708	22	0105-220477	156	22.5	Runs E-W on E slope, N of P-21
23-May-25	1714	23	0105-220471	135	22.5	Runs E-W on E slope, N of P-22
23-May-25	1720	24	0105-220477	113	22.5	Runs E-W on E slope, N of P-23
23-May-25	1730	25	0105-220477	88	22.5	Runs E-W on E slope, N of P-24
23-May-25	1735	26	0105-220477	63	22.5	Runs E-W on E slope, N of P-25
23-May-25	1741	27	0105-220477	37	22.5	Runs E-W on E slope, N of P-26
23-May-25	1746	28	0105-220477	16	12	N of P-27, Triangle in NE Corner
24-May-25	0650	29	0105-220468	213	22.5	
24-May-25	0657	30	0105-220468	188	22.5	N of P29
24-May-25	0701	31	0105-220468	167	22.5	N of P30
24-May-25	0707	32	0105-220468	142	22.5	N of P31
24-May-25	0725	33	0105-220475	120	22.5	N of P32
24-May-25	0730	34	0105-220475	98	22.5	N of P33
24-May-25	0810	35	0105-220475	76	22.5	N of P34
24-May-25	0816	36	0105-220475	52	22.5	N of P35
24-May-25	0826	37	0105-220475	30	18	N of P36, Triangle in NW Corner
24-May-25	0940	38	0105-220475	373.5	22.5	S of 20, S of P29

GEOSYNTHETIC PANEL PLACEMENT RECORD

SCS Engineers CQA Technician: Chris Calhoun
Matt Kuhlenengel

Client Name: City of Ames
Project Location: Ames Ash Pond
200 East 5th Street, Ames, IA

SCS Engineers Project Name: Ames Ash Pond Closure
SCS Engineers Project Number: 27219356.02

Date dd-mmm-yy	Time hhmm (24)	Panel Number	Roll Number	Panel Length (feet)	Panel Width (feet)	Panel Location/Comments (Tech #)
24-May-25	0953	39	0105-220477	37	22.5	S of P29, W of P38
24-May-25	1013	40	0105-220470	411	22.5	
24-May-25	1058	41	0105-220470	207	22.5	S of P40
24-May-25	1108	42	0105-220465	186	22.5	S of P41
24-May-25	1114	43	0105-220465	161	22.5	S of P42
24-May-25	1120	44	0105-220465	141	22.5	S of P43
24-May-25	1126	45	0105-220465	118	22.5	S of P44
24-May-25	1315	46	0105-220465	93	22.5	S of P45
24-May-25	1323	47	0105-220472	69	22.5	S of P46
24-May-25	1328	48	0105-220472	45	22.5	S of P47
24-May-25	1330	49	0105-220472	12	11	S of P48, Triangle in SE Corner
24-May-25	1404	50	0105-220472	198	22.5	Mid south slope
24-May-25	1414	51	0105-220472	178	22.5	E of P50
24-May-25	1419	52	0105-220472	156	22.5	E of P51
24-May-25	1442	53	0105-220466	131	22.5	E of P52
24-May-25	1446	54	0105-220472	109	22.5	E of P53
24-May-25	1450	55	0105-220466	88	22.5	E of P54
24-May-25	1453	56	0105-220466	65	22.5	E of P55
24-May-25	1457	57	0105-220466	44	22.5	E of P56

GEOSYNTHETIC PANEL PLACEMENT RECORD

SCS Engineers CQA Technician: Chris Calhoun
Matt Kuhlenengel

Client Name: City of Ames
Project Location: Ames Ash Pond
200 East 5th Street, Ames, IA

SCS Engineers Project Name: Ames Ash Pond Closure
SCS Engineers Project Number: 27219356.02

Date dd-mmm-yy	Time hhmm (24)	Panel Number	Roll Number	Panel Length (feet)	Panel Width (feet)	Panel Location/Comments (Tech #)
24-May-25	1507	58	0105-220466	22	20	E of P57, Triangle in SE Corner
25-May-25	0615	59	0105-220466	198	22.5	W of P50
25-May-25	0624	60	0105-220466	179	22.5	W of P59
25-May-25	0633	61	0105-220474	159	22.5	W of P60
25-May-25	0639	62	0105-220474	138	22.5	W of P61
25-May-25	0648	63	0105-220474	118	22.5	W of P62
25-May-25	0653	64	0105-220474	98	22.5	W of P63
25-May-25	0658	65	0105-220474	77	22.5	W of P64
25-May-25	0735	66	0105-220474	57	21	W of P65
25-May-25	0805	67	0105-220473	208	22.5	S of P40
25-May-25	0810	68	0105-220473	183	22.5	S of P67
25-May-25	0815	69	0105-220473	159	22.5	S of P68
25-May-25	0820	70	0105-220473	134	22.5	S of P69
25-May-25	0825	71	0105-220473	58	22.5	S of P70, E of P72
25-May-25	0829	72	0105-220474	51	22.5	S of P70, W of P71
25-May-25	0836	73	0105-220477	48	22.5	S of P71 & P72
25-May-25	0842	74	0105-220469	36	22.5	S of P72, W of P73
25-May-25	0850	75	0105-220468	61	22.5	S of P73 & P74
25-May-25	0900	76	0105-220468	10	22.5	E of P75, N of P77

GEOSYNTHETIC PANEL PLACEMENT RECORD

SCS Engineers CQA Technician: *Chris Calhoun*, *Matt Kuhlenengel*

Client Name: *City of Ames*
Project Location: *Ames Ash Pond*, *200 East 5th Street, Ames, IA*

SCS Engineers Project Name: *Ames Ash Pond Closure*
SCS Engineers Project Number: *27219356.02*

Date dd-mmm-yy	Time hhmm (24)	Panel Number	Roll Number	Panel Length (feet)	Panel Width (feet)	Panel Location/Comments (Tech #)
25-May-25	0905	77	0105-220473	27	22.5	E of P75, S of P76
25-May-25	0915	78	0105-220467	26	17	E of P76 & P77
31-May-25	1120	79	0105-216930	411	22.5	Runs E-W on center of E & W slopes and across peak.

I.7 – Trial Weld Record

TRIAL WELD RECORD

Client Name: City of Ames
SCS Engineers Project Name: Ames Ash Pond Closure
SCS Engineers Project Number: 27219356.02
Project Location: Ames Ash Pond
200 East 5th Street, Ames, IA

Specifications: 40 mil
Material Type: LLDPE

	Fusion	Extrusion
Peel (P)	≥ 50 lb/in	≥ 44 lb/in
Shear (S)	≥ 60 lb/in	≥ 60 lb/in

Max # of Failing Tests Allowed per P/S Set: 0 ea

SCS Engineers
CQA Technician: Chris Calhoun
Matt Kuhlenengel

Trial Weld Number	Date dd-mmm-yy	Time hhmm (24)	Ambient Temp (F°)	Installer QC	Seamers Initials	Machine Number	Machine Properties	Weld Type		Test Values (lbs/in) Coupon 1	Coupon 2	Coupon 3	Coupon 4	Coupon 5	Pass/ Fail	Material (Top 1st)	Comments (Tech #)
1	23-May-25	1320	67	YC	JV	6416	860/700	Fusion	P	80 83	82 80	83 82			Pass	S/S	
									S	90	82	88					
2	23-May-25	1320	67	YC	JOV	6421	860/600	Fusion	P	83 78	72 78	81 77			Pass	S/S	
									S	88	83	88					
3	23-May-25	1614	68	YC	JV	6416	860/500	Fusion	P	89 87	92 81	87 78			Pass	T/T	
									S	98	104	97					
4	23-May-25	1625	68	YC	JOV	6421	860/500	Fusion	P	78 77	71 82	82 78			Pass	T/T	
									S	99	92	91					
5	24-May-25	0655	57	YC	JV	6416	860/700	Fusion	P	48 51	48 55				Fail	S/S	Machine pulled for onsite tuning
									S	65	65						
6	24-May-25	0708	57	YC	JOV	6421	860/500	Fusion	P	103 106	93 100	100 96			Pass	S/S	
									S	118	117	128					
7	24-May-25	0816	57	YC	JV	6416	860/500	Fusion	P	83 83	88 96	98 99			Pass	S/S	
									S	108	104	116					
8	24-May-25	0820	57	YC	JV	6416	860/400	Fusion	P	85 79	85 83	83 85			Pass	T/T	
									S	101	103	93					
9	24-May-25	1322	66	YC	JV	6416	860/500	Fusion	P	80 85	77 88	83 81			Pass	T/T	
									S	90	93	92					
10	24-May-25	1335	66	YC	JOV	6421	860/650	Fusion	P	92 91	97 91	99 90			Pass	S/S	
									S	109	103	104					
11	24-May-25	1341	66	YC	JV	6416	860/600	Fusion	P	74 77	77 81	83 77			Pass	S/S	
									S	98	96	100					
12	24-May-25	1344	66	YC	JOV	6421	860/500	Fusion	P	94 88	84 90	84 76			Pass	T/T	
									S	101	93	95					
13	25-May-25	0623	57	YC	JV	6416	860/600	Fusion	P	83 78	100 91	98 91			Pass	S/S	
									S	117	111	115					
14	25-May-25	0624	57	YC	JOV	6421	860/500	Fusion	P	104 93	100 76	86 83			Pass	S/S	
									S	123	102	116					
15	25-May-25	0623	57	YC	JV	6416	860/400	Fusion	P	75 91	84 83	61 77			Pass	T/T	
									S	100	99	97					
16	27-May-25	0649	55	YC	JS	7541	500/500	Extrusion	P	102	97	89			Pass	T/T	
									S	103	101	104					
17	27-May-25	0718	55	YC	JV	7542	550/550	Extrusion	P	84	92	91			Pass	T/T	
									S	92	92	98					
18	28-May-25	0650	55	YC	JG	076	550/500	Extrusion	P	56	81	57			Pass	T/T	
									S	89	110	99					
19	28-May-25	0702	55	YC	JV	7542	550/480	Extrusion	P	83	96	78			Pass	T/T	
									S	95	88	90					
20	28-May-25	0711	55	YC	JS	7541	500/500	Extrusion	P	80	100	94			Pass	T/T	
									S	106	100	94					
21	28-May-25	1329	62	YC	JV	7542	550/380	Extrusion	P	91	63	79			Pass	T/T	
									S	104	74	78					
22	31-May-25	1045	78	YC	JOV	6421	860/700	Fusion	P	70 73	70 71	78 66			Pass	S/S	
									S	82	86	80					
23	31-May-25	1113	78	YC	JV	6416	860/600	Fusion	P	84 89	73 71	75 72			Pass	S/S	
									S	71	77	71					

TRIAL WELD RECORD

Client Name: City of Ames
SCS Engineers Project Name: Ames Ash Pond Closure
SCS Engineers Project Number: 27219356.02
Project Location: Ames Ash Pond
200 East 5th Street, Ames, IA

Specifications: 40 mil
Material Type: LLDPE

	Fusion	Extrusion
Peel (P)	≥ 50 lb/in	≥ 44 lb/in
Shear (S)	≥ 60 lb/in	≥ 60 lb/in

Max # of Failing Tests Allowed per P/S Set: 0 ea

SCS Engineers
CQA Technician: Chris Calhoun
Matt Kuhlenengel

Trial Weld Number	Date (dd-mmm-yy)	Time (hhmm (24))	Ambient Temp (F°)	Installer QC	Seamers Initials	Machine Number	Machine Properties	Weld Type		Test Values (lbs/in) Coupon 1	Coupon 2	Coupon 3	Coupon 4	Coupon 5	Pass/ Fail	Material (Top 1st)	Comments (Tech #)
24	31-May-25	1117	78	YC	JV	6416	860/500	Fusion	P	70 75	76 75	72 77			Pass	T/T	
									S	81	84	84					
25	31-May-25	1130	79	YC	JV	6416	860/600	Fusion	P	70 69	70 68	69 68			Pass	S/T	
									S	71	72	74					
26	31-May-25	1343	82	YC	JV	7542	500/380	Extrusion	P	65	60	81			Pass	T/T	
									S	90	87	81					

I.8 – Seam/Non-Destructive Test Record

SEAM/NON-DESTRUCTIVE TEST RECORD

N
100000 ft <-- See' Project Information' Worksheet Cell 'G45'

SCS Engineers CQA Technician: *Chris Calhoun*, *Matt Kuhlenengel*

Client Name: *City of Ames*

Project Location: *Ames Ash Pond*, *200 East 5th Street, Ames, IA*

SCS Engineers Project Name: *Ames Ash Pond Closure*

SCS Engineers Project Number: *27219356.02*

= No of Passed Tests

= No of Failed Tests

Date of Interest
dd-mmm-yy

Note if blank will consider all dates.

Max Pressure Drop = 4.00 psi

Elapsed Test Interval= 2.0 min

Seaming Information											These columns Intentionally Left Blank				Non-Destructive Testing Information										
Date dd-mmm-yy	Time hhmm (24)	Seam Numbers			Seam Length	Seamer Initials	Machine Number	Trial Weld #	Direction Seamed	Destruct Number	Material (Top 1st)					Date Tested dd-mmm-yy	Addn'l Test #'s	Tester Initials	Pressure Start	Pressure End	Pressure +/-	Time [hhmm (24)] Start	Time [hhmm (24)] End	P/F	Vacuum Box P/F	Location/Comments (Tech #)
23-May-25	1333	P-1	P-2		215 ft	JV	6416	1	NORTH		S/S					23-May-25		ASB	30	30	0	1436	1438	Pass		
23-May-25	1337	P-2	P-3		189 ft	JOV	6421	2	NORTH		S/S					23-May-25		ASB	30	30	0	1440	1442	Pass		
23-May-25	1400	P-3	P-4		171 ft	JV	6416	1	SOUTH	DS-5	S/S					23-May-25		ASB	30	30	0	1445	1447	Pass		
23-May-25	1400	P-4	P-5		130 ft	JOV	6421	2	NORTH		S/S					23-May-25		ASB	30	30	0	1455	1457	Pass		
23-May-25	1416	P-4	P-5		18 ft	JOV	6421	2	NORTH		S/S					23-May-25		ASB	30	30	0	1525	1527	Pass		
23-May-25	1422	P-5	P-6		123 ft	JOV	6421	2	NORTH	DS-1	S/S					23-May-25		ASB	30	28	2	1500	1502	Pass		
23-May-25	1421	P-6	P-7		100 ft	JV	6416	1	NORTH		S/S					23-May-25		ASB	30	30	0	1505	1507	Pass		
23-May-25	1433	P-7	P-8		77 ft	JV	6416	1	NORTH		S/S					23-May-25		ASB	30	30	0	1510	1512	Pass		
23-May-25	1438	P-8	P-9		55 ft	JOV	6421	2	NORTH	DS-2	S/S					23-May-25		ASB	30	30	0	1515	1517	Pass		
23-May-25	1440	P-9	P-10		35 ft	JV	6416	1	NORTH		S/S					23-May-25		ASB	30	30	0	1516	1518	Pass		
23-May-25	1458	P-1	P-11		205 ft	JOV	6421	2	NORTH		S/S					23-May-25		ASB	30	28	2	1535	1537	Pass		
23-May-25	1504	P-11	P-12		185 ft	JV	6416	1	NORTH		S/S					23-May-25		ASB	30	28	2	1540	1542	Pass		
23-May-25	1524	P-12	P-13		161 ft	JOV	6421	2	NORTH	DS-3	S/S					23-May-25		ASB	30	30	0	1545	1547	Pass		
23-May-25	1527	P-13	P-14		140 ft	JV	6416	1	NORTH		S/S					23-May-25		ASB	30	29	1	1555	1557	Pass		
23-May-25	1544	P-14	P-15		119 ft	JOV	6421	2	NORTH	DS-4	S/S					23-May-25		ASB	30	30	0	1600	1602	Pass		
23-May-25	1549	P-15	P-16		95 ft	JV	6416	1	NORTH		S/S					23-May-25		ASB	30	29	1	1605	1607	Pass		
23-May-25	1558	P-16	P-17		78 ft	JOV	6421	2	NORTH		S/S					23-May-25	1	ASB	30	29	1	1610	1612	Pass		
23-May-25	1604	P-17	P-18		51 ft	JV	6416	1	SOUTH		S/S					23-May-25		ASB	30	30	0	1616	1618	Pass		
23-May-25	1612	P-18	P-19		28 ft	JOV	6421	2	SOUTH		S/S					23-May-25		ASB	30	30	0	1622	1624	Pass		
23-May-25	1710	P-20	P-21		184 ft	JOV	6421	2	EAST		S/S					23-May-25		ASB	30	30	0	1757	1759	Pass		
23-May-25	1716	P-21	P-22		156 ft	JV	6416	1	EAST		S/S					23-May-25		ASB	30	29	1	1759	1801	Pass		
23-May-25	1731	P-22	P-23		135 ft	JOV	6421	2	EAST		S/S					23-May-25		ASB	30	30	0	1800	1802	Pass		
23-May-25	1738	P-23	P-24		113 ft	JV	6416	1	EAST		S/S					23-May-25		ASB	30	30	0	1802	1804	Pass		
23-May-25	1749	P-24	P-25		88 ft	JOV	6421	2	EAST	DS-6	S/S					23-May-25		ASB	30	30	0	1810	1812	Pass		
23-May-25	1753	P-25	P-26		63 ft	JV	6416	1	EAST		S/S					23-May-25		ASB	30	30	0	1811	1813	Pass		
23-May-25	1800	P-26	P-27		37 ft	JOV	6421	2	EAST		S/S					23-May-25		ASB	30	30	0	1812	1814	Pass		
23-May-25	1802	P-27	P-28		16 ft	JV	6416	1	EAST	DS-7	S/S					23-May-25		ASB	30	30	0	1813	1815	Pass		
23-May-25	1822	P-19	P-28		8 ft	JV	6416	3	SW		T/T					23-May-25		ASB	30	30	0	1835	1837	Pass		
23-May-25	1822	P-18	P-28		8 ft	JV	6416	3	SW		T/T					23-May-25		ASB	30	30	0	1839	1841	Pass		
23-May-25	1824	P-18	P-27		23 ft	JV	6416	3	SW		T/T					23-May-25		ASB	30	30	0	1841	1843	Pass		
23-May-25	1827	P-17	P-27		8 ft	JV	6416	3	SW		T/T					23-May-25		ASB	30	30	0	1843	1845	Pass		
23-May-25	1828	P-17	P-26		22 ft	JV	6416	3	SW		T/T					23-May-25		ASB	30	30	0	1845	1847	Pass		

SEAM/NON-DESTRUCTIVE TEST RECORD

N
100000 ft <-- See' Project Information' Worksheet Cell 'G45'

Client Name: City of Ames
Project Location: Ames Ash Pond
200 East 5th Street, Ames, IA

SCS Engineers CQA Technician: Chris Calhoun
Matt Kuhlenengel
SCS Engineers Project Name: Ames Ash Pond Closure
SCS Engineers Project Number: 27219356.02

= No of Passed Tests
= No of Failed Tests

Date of Interest
dd-mmm-yy

Note if blank will consider all dates.

Max Pressure Drop = 4.00 psi
Elapsed Test Interval= 2.0 min

Seaming Information											These columns Intentionally Left Blank				Non-Destructive Testing Information										
Date dd-mmm-yy	Time hhmm (24)	Seam Numbers			Seam Length	Seamer Initials	Machine Number	Trial Weld #	Direction Seamed	Destruct Number	Material (Top 1st)					Date Tested dd-mmm-yy	Addn'l Test #'s	Tester Initials	Pressure Start	Pressure End	Pressure +/-	Time [hhmm (24)] Start	Time [hhmm (24)] End	P/F	Vacuum Box P/F	Location/Comments (Tech #)
23-May-25	1831	P-16	P-26		9 ft	JV	6416	3	SW		T/T					23-May-25		ASB	30	30	0	1849	1851	Pass		
23-May-25	1833	P-16	P-25		20 ft	JV	6416	3	SW		T/T					23-May-25		ASB	30	30	0	1851	1853	Pass		
23-May-25	1836	P-15	P-25		11 ft	JV	6416	3	SW		T/T					23-May-25		ASB	30	30	0	1852	1854	Pass		
23-May-25	1837	P-15	P-24		19 ft	JV	6416	3	SW		T/T					23-May-25		ASB	30	30	0	1854	1856	Pass		
23-May-25	1840	P-14	P-24		12 ft	JV	6416	3	SW		T/T					23-May-25		ASB	30	29	1	1857	1859	Pass		
23-May-25	1842	P-14	P-23		18 ft	JV	6416	3	SW	DS-8	T/T					23-May-25		ASB	30	28	2	1901	1903	Pass		
23-May-25	1844	P-13	P-23		14 ft	JV	6416	3	SW		T/T					23-May-25		ASB	30	28	2	1903	1905	Pass		
23-May-25	1846	P-13	P-22		16 ft	JV	6416	3	SW		T/T					23-May-25		ASB	30	30	0	1904	1906	Pass		
23-May-25	1849	P-12	P-22		15 ft	JV	6416	3	SW		T/T					23-May-25		ASB	30	30	0	1906	1908	Pass		
23-May-25	1851	P-12	P-21		15 ft	JV	6416	3	SW		T/T					23-May-25		ASB	30	29	1	1910	1912	Pass		
23-May-25	1853	P-11	P-21		17 ft	JV	6416	3	SW		T/T					23-May-25		ASB	30	30	0	1911	1913	Pass		
23-May-25	1856	P-11	P-20		12 ft	JV	6416	3	SW		T/T					23-May-25		ASB	30	30	0	1912	1914	Pass		
23-May-25	1858	P-1	P-20		18 ft	JV	6416	3	SW		T/T					23-May-25		ASB	30	30	0	1913	1915	Pass		
24-May-25	0716	P-29	P-30		188 ft	JOV	6421	6	WEST		S/S					24-May-25		JEL	30	30	0	837	0839	Pass		
24-May-25	0745	P-30	P-31		167 ft	JOV	6421	6	WEST		S/S					24-May-25		JEL	30	30	0	844	0846	Pass		
24-May-25	0810	P-31	P-32		142 ft	JOV	6421	6	WEST		S/S					24-May-25		JEL	30	30	0	845	0847	Pass		
24-May-25	0827	P-32	P-33		120 ft	JV	6416	7	WEST	DS-9	S/S					24-May-25		JEL	30	28	2	847	0849	Pass		
24-May-25	0829	P-33	P-34		98 ft	JOV	6421	6	EAST		S/S					24-May-25		JEL	30	30	0	852	0854	Pass		
24-May-25	0844	P-34	P-35		76 ft	JOV	6421	6	EAST	DS-10	S/S					24-May-25	2	JEL	30	28	2	857	0859	Pass		
24-May-25	0846	P-35	P-36		52 ft	JV	6416	7	EAST		S/S					24-May-25		JEL	30	30	0	859	0901	Pass		
24-May-25	0856	P-36	P-37		30 ft	JV	6416	7	EAST		S/S					24-May-25		JEL	30	28	2	901	0903	Pass		
24-May-25	0912	P-1	P-29		11 ft	JV	6416	8	NW		T/T					24-May-25		JEL	30	30	0	919	0921	Pass		
24-May-25	0913	P-2	P-29		19 ft	JV	6416	8	NW		T/T					24-May-25		JEL	30	30	0	921	0923	Pass		
24-May-25	0916	P-2	P-30		10 ft	JV	6416	8	NW		T/T					24-May-25		JEL	30	30	0	929	0931	Pass		
24-May-25	0919	P-3	P-30		20 ft	JV	6416	8	NW		T/T					24-May-25		JEL	30	30	0	932	0934	Pass		
24-May-25	0922	P-3	P-31		10 ft	JV	6416	8	NW		T/T					24-May-25		JEL	30	30	0	934	0936	Pass		
24-May-25	0924	P-4	P-31		21 ft	JV	6416	8	NW	DS-11	T/T					24-May-25		JEL	30	30	0	936	0938	Pass		
24-May-25	0927	P-4	P-32		9 ft	JV	6416	8	NW		T/T					24-May-25		JEL	30	30	0	938	0940	Pass		
24-May-25	0929	P-5	P-32		21 ft	JV	6416	8	NW		T/T					24-May-25		JEL	30	28	2	940	0942	Pass		
24-May-25	0933	P-5	P-33		8 ft	JV	6416	8	NW		T/T					24-May-25		JEL	30	29	1	942	0944	Pass		
24-May-25	0935	P-6	P-33		22 ft	JV	6416	8	NW		T/T					24-May-25		JEL	30	30	0	944	0946	Pass		
24-May-25	0938	P-6	P-34		7 ft	JV	6416	8	NW		T/T					24-May-25		JEL	30	30	0	946	0948	Pass		

SEAM/NON-DESTRUCTIVE TEST RECORD

Client Name: *City of Ames*
Project Location: *Ames Ash Pond*
200 East 5th Street, Ames, IA

SCS Engineers CQA Technician: *Chris Calhoun*
Matt Kuhlenengel
SCS Engineers Project Name: *Ames Ash Pond Closure*
SCS Engineers Project Number: *27219356.02*

= No of Passed Tests
= No of Failed Tests

Date of Interest
dd-mmm-yy
Note if blank will consider all dates.

Max Pressure Drop = 4.00 psi
Elapsed Test Interval= 2.0 min

Seaming Information											These columns Intentionally Left Blank				Non-Destructive Testing Information											
Date dd-mmm-yy	Time hhmm (24)	Seam Numbers			Seam Length	Seamer Initials	Machine Number	Trial Weld #	Direction Seamed	Destruct Number	Material (Top 1st)					Date Tested dd-mmm-yy	Addn'l Test #'s	Tester Initials	Pressure Start	Pressure End	Pressure +/-	Time [hhmm (24)] Start	Time [hhmm (24)] End	P/F	Vacuum Box P/F	Location/Comments (Tech #)
24-May-25	*0940*	*P-7*	*P-34*		*23 ft*	*JV*	*6416*	*8*	*NW*		*T/T*					*24-May-25*		*JEL*	*30*	*30*	*0*	*948*	*0950*	*Pass*		
24-May-25	*0943*	*P-7*	*P-35*		*6 ft*	*JV*	*6416*	*8*	*NW*		*T/T*					*24-May-25*		*JEL*	*30*	*30*	*0*	*950*	*0952*	*Pass*		
24-May-25	*0944*	*P-8*	*P-35*		*25 ft*	*JV*	*6416*	*8*	*NW*		*T/T*					*24-May-25*		*JEL*	*30*	*30*	*0*	*951*	*0953*	*Pass*		
24-May-25	*0948*	*P-8*	*P-36*		*4 ft*	*JV*	*6416*	*8*	*NW*		*T/T*					*24-May-25*		*JEL*	*30*	*30*	*0*	*956*	*0958*	*Pass*		
24-May-25	*0949*	*P-9*	*P-36*		*27 ft*	*JV*	*6416*	*8*	*NW*		*T/T*					*24-May-25*		*JEL*	*30*	*29*	*1*	*1001*	*1003*	*Pass*		
24-May-25	*0955*	*P-10*	*P-37*		*24 ft*	*JV*	*6416*	*8*	*NW*		*T/T*					*24-May-25*		*JEL*	*30*	*30*	*0*	*1003*	*1005*	*Pass*		
24-May-25	*0954*	*P-20*	*P-38*		*200 ft*	*JOV*	*6421*	*6*	*WEST*		*S/S*					*25-May-25*		*JL*	*30*	*30*	*0*	*747*	*0749*	*Pass*		
24-May-25	*1018*	*P-29*	*P-38*		*176 ft*	*JOV*	*6421*	*6*	*WEST*		*S/S*					*25-May-25*		*JL*	*30*	*30*	*0*	*741*	*0743*	*Pass*		
24-May-25	*1040*	*P-29*	*P-39*		*37 ft*	*JOV*	*6421*	*6*	*WEST*		*S/S*					*25-May-25*		*JL*	*30*	*30*	*0*	*740*	*0742*	*Pass*		
24-May-25	*1003*	*P-38*	*P-39*		*22 ft*	*JV*	*6416*	*8*	*NORTH*		*T/T*					*24-May-25*		*JEL*	*30*	*30*	*0*	*1349*	*1351*	*Pass*		
24-May-25	*1103*	*P-40*	*P-41*		*207 ft*	*JV*	*6416*	*7*	*WEST*	*DS-12*	*S/S*					*24-May-25*		*JEL*	*30*	*30*	*0*	*1313*	*1315*	*Pass*		
24-May-25	*1114*	*P-41*	*P-42*		*186 ft*	*JOV*	*6421*	*6*	*WEST*		*S/S*					*24-May-25*		*JEL*	*30*	*30*	*0*	*1335*	*1337*	*Pass*		
24-May-25	*1132*	*P-42*	*P-43*		*161 ft*	*JV*	*6416*	*7*	*EAST*		*S/S*					*24-May-25*		*JEL*	*30*	*28*	*2*	*1336*	*1338*	*Pass*		
24-May-25	*1138*	*P-43*	*P-44*		*141 ft*	*JOV*	*6421*	*6*	*EAST*		*S/S*					*24-May-25*		*JEL*	*30*	*30*	*0*	*1337*	*1339*	*Pass*		
24-May-25	*1152*	*P-44*	*P-45*		*118 ft*	*JV*	*6416*	*7*	*WEST*		*S/S*					*24-May-25*		*JEL*	*30*	*30*	*0*	*1339*	*1341*	*Pass*		
24-May-25	*1341*	*P-45*	*P-46*		*93 ft*	*JOV*	*6421*	*10*	*WEST*	*DS-13*	*S/S*					*24-May-25*		*JEL*	*30*	*30*	*0*	*1357*	*1359*	*Pass*		
24-May-25	*1342*	*P-46*	*P-47*		*69 ft*	*JV*	*6416*	*11*	*WEST*		*S/S*					*24-May-25*		*JL*	*30*	*30*	*0*	*1358*	*1400*	*Pass*		
24-May-25	*1353*	*P-47*	*P-48*		*45 ft*	*JV*	*6416*	*11*	*WEST*		*S/S*					*24-May-25*		*JEL*	*30*	*30*	*0*	*1359*	*1401*	*Pass*		
24-May-25	*1402*	*P-48*	*P-49*		*12 ft*	*JV*	*6416*	*11*	*EAST*		*S/S*					*24-May-25*		*JL*	*30*	*30*	*0*	*1400*	*1402*	*Pass*		
24-May-25	*1423*	*P-50*	*P-51*		*178 ft*	*JV*	*6416*	*11*	*SOUTH*		*S/S*					*24-May-25*		*JL*	*30*	*30*	*0*	*1512*	*1514*	*Pass*		
24-May-25	*1423*	*P-51*	*P-52*		*156 ft*	*JOV*	*6421*	*10*	*SOUTH*		*S/S*					*24-May-25*		*JL*	*30*	*30*	*0*	*1513*	*1515*	*Pass*		
24-May-25	*1450*	*P-52*	*P-53*		*131 ft*	*JOV*	*6421*	*10*	*SOUTH*		*S/S*					*24-May-25*		*JL*	*30*	*30*	*0*	*1515*	*1517*	*Pass*		
24-May-25	*1450*	*P-53*	*P-54*		*109 ft*	*JV*	*6416*	*11*	*SOUTH*		*S/S*					*24-May-25*		*JL*	*30*	*29*	*1*	*1521*	*1523*	*Pass*		
24-May-25	*1505*	*P-54*	*P-55*		*88 ft*	*JV*	*6416*	*11*	*NORTH*		*S/S*					*24-May-25*		*JL*	*30*	*28*	*2*	*1524*	*1526*	*Pass*		
24-May-25	*1508*	*P-55*	*P-56*		*65 ft*	*JOV*	*6421*	*10*	*NORTH*	*DS-14*	*S/S*					*24-May-25*		*JL*	*30*	*30*	*0*	*1525*	*1527*	*Pass*		
24-May-25	*1518*	*P-56*	*P-57*		*44 ft*	*JV*	*6416*	*11*	*SOUTH*		*S/S*					*24-May-25*		*JL*	*30*	*30*	*0*	*1526*	*1528*	*Pass*		
24-May-25	*1519*	*P-57*	*P-58*		*22 ft*	*JOV*	*6421*	*10*	*SOUTH*		*S/S*					*24-May-25*		*JL*	*30*	*28*	*2*	*1527*	*1529*	*Pass*		
24-May-25	*1540*	*P-49*	*P-58*		*13 ft*	*JV*	*6416*	*9*	*NW*		*T/T*					*24-May-25*		*JL*	*30*	*30*	*0*	*1550*	*1552*	*Pass*		
24-May-25	*1543*	*P-48*	*P-58*		*11 ft*	*JV*	*6416*	*9*	*NW*		*T/T*					*24-May-25*		*JEL*	*30*	*30*	*0*	*1600*	*1602*	*Pass*		
24-May-25	*1545*	*P-48*	*P-57*		*19 ft*	*JV*	*6416*	*9*	*NW*		*T/T*					*24-May-25*		*JL*	*30*	*30*	*0*	*1603*	*1605*	*Pass*		
24-May-25	*1547*	*P-47*	*P-57*		*10 ft*	*JV*	*6416*	*9*	*NW*		*T/T*					*24-May-25*		*JL*	*30*	*30*	*0*	*1604*	*1606*	*Pass*		
24-May-25	*1549*	*P-47*	*P-56*		*20 ft*	*JV*	*6416*	*9*	*NW*		*T/T*					*24-May-25*		*JL*	*30*	*30*	*0*	*1606*	*1608*	*Pass*		

SEAM/NON-DESTRUCTIVE TEST RECORD

Client Name: City of Ames
Project Location: Ames Ash Pond, 200 East 5th Street, Ames, IA

SCS Engineers CQA Technician: Chris Calhoun, Matt Kuhlenengel
SCS Engineers Project Name: Ames Ash Pond Closure
SCS Engineers Project Number: 27219356.02

= No of Passed Tests
= No of Failed Tests

Date of Interest (dd-mmm-yy)
Note if blank will consider all dates.

Max Pressure Drop = 4.00 psi
Elapsed Test Interval= 2.0 min

Seaming Information											These columns Intentionally Left Blank				Non-Destructive Testing Information											
Date dd-mmm-yy	Time hhmm (24)	Seam Numbers			Seam Length	Seamer Initials	Machine Number	Trial Weld #	Direction Seamed	Destruct Number	Material (Top 1st)					Date Tested dd-mmm-yy	Addn'l Test #'s	Tester Initials	Pressure Start	Pressure End	Pressure +/-	Time [hhmm (24)] Start	Time [hhmm (24)] End	P/F	Vacuum Box P/F	Location/Comments (Tech #)
24-May-25	1552	P-46	P-56		9 ft	JV	6416	9	NW		T/T					24-May-25		JL	30	30	0	1611	1613	Pass		
24-May-25	1553	P-46	P-55		23 ft	JV	6416	9	NW		T/T					24-May-25		JL	30	30	0	1630	1632	Pass		
24-May-25	1556	P-45	P-55		5 ft	JV	6416	9	NW		T/T					24-May-25		JL	30	30	0	1635	1637	Pass		
24-May-25	1556	P-45	P-54		27 ft	JV	6416	9	NW	DS-15	T/T					24-May-25		JL	30	30	0	1639	1641	Pass		
24-May-25	1600	P-44	P-53		30 ft	JV	6416	9	NW		T/T					24-May-25		JL	30	30	0	1640	1642	Pass		
24-May-25	1604	P-43	P-52		30 ft	JV	6416	9	NW		T/T					24-May-25		JL	30	30	0	1642	1644	Pass		
24-May-25	1609	P-42	P-51		30 ft	JV	6416	9	NW		T/T					24-May-25	3	JL	30	30	0	1643	1645	Pass		
24-May-25	1613	P-41	P-50		31 ft	JV	6416	9	NW		T/T					24-May-25		JL	30	30	0	1646	1648	Pass		
25-May-25	0639	P-50	P-59		198 ft	JV	6416	13	SOUTH		S/S					25-May-25		JL	30	30	0	723	0725	Pass		
25-May-25	0650	P-59	P-60		179 ft	JOV	6421	14	SOUTH		S/S					25-May-25		JL	30	30	0	724	0726	Pass		
25-May-25	0707	P-60	P-61		159 ft	JV	6416	13	SOUTH		S/S					25-May-25		JL	30	30	0	725	0727	Pass		
25-May-25	0714	P-61	P-62		138 ft	JOV	6421	14	NORTH		S/S					25-May-25		JL	30	30	0	730	0732	Pass		
25-May-25	0728	P-62	P-63		118 ft	JV	6416	13	NORTH	DS-16	S/S					25-May-25		JL	30	30	0	750	0752	Pass		
25-May-25	0734	P-63	P-64		98 ft	JOV	6421	14	NORTH		S/S					25-May-25		JL	30	30	0	752	0754	Pass		
25-May-25	0748	P-64	P-65		77 ft	JOV	6421	14	NORTH		S/S					25-May-25		JL	30	30	0	756	0758	Pass		
25-May-25	0749	P-65	P-66		57 ft	JV	6416	13	NORTH		S/S					25-May-25		JL	30	30	0	757	0759	Pass		
25-May-25	0814	P-40	P-67		208 ft	JV	6416	13	EAST		S/S					25-May-25		JL	30	30	0	850	0852	Pass		
25-May-25	0815	P-67	P-68		183 ft	JOV	6421	14	WEST		S/S					25-May-25		JL	30	30	0	854	0856	Pass		
25-May-25	0840	P-68	P-69		159 ft	JOV	6421	14	EAST	DS-17	S/S					25-May-25		JL	30	30	0	911	0913	Pass		
25-May-25	0846	P-69	P-70		134 ft	JV	6416	13	WEST		S/S					25-May-25		JL	30	30	0	914	0916	Pass		
25-May-25	0903	P-70	P-71		58 ft	JOV	6421	14	WEST		S/S					25-May-25		JL	30	30	0	915	0917	Pass		
25-May-25	0910	P-70	P-72		51 ft	JOV	6421	14	WEST		S/S					25-May-25		JL	30	30	0	949	0951	Pass		
25-May-25	0902	P-71	P-72		22 ft	JV	6416	15	NORTH		T/T					25-May-25		JL	30	30	0	937	0939	Pass		
25-May-25	0918	P-72	P-74		36 ft	JOV	6421	14	EAST		S/S					25-May-25		JL	30	28	2	956	0958	Pass		
25-May-25	0922	P-72	P-73		16 ft	JOV	6421	14	EAST		S/S					25-May-25		JL	30	30	0	951	0953	Pass		
25-May-25	0925	P-71	P-73		32 ft	JOV	6421	14	EAST		S/S					25-May-25		JL	30	30	0	934	0936	Pass		
25-May-25	0908	P-73	P-74		22 ft	JV	6416	15	NORTH		T/T					25-May-25		JL	30	30	0	940	0942	Pass		
25-May-25	0930	P-73	P-75		25 ft	JOV	6421	14	WEST		S/S					25-May-25		JL	30	30	0	936	0938	Pass		
25-May-25	0934	P-74	P-75		36 ft	JOV	6421	14	WEST	DS-18	S/S					25-May-25		JL	30	30	0	938	0940	Pass		
25-May-25	0918	P-75	P-76		10 ft	JV	6416	13	WEST		S/S					25-May-25		JL	30	30	0	953	0955	Pass		
25-May-25	0919	P-75	P-77		36 ft	JV	6416	13	WEST	DS-19	S/S					25-May-25		JL	30	30	0	954	0956	Pass		
25-May-25	0912	P-76	P-77		22 ft	JV	6416	15	NORTH		T/T					25-May-25		JL	30	30	0	955	0957	Pass		

SEAM/NON-DESTRUCTIVE TEST RECORD

N
100000 ft <-- See' Project Information' Worksheet Cell 'G45'

Client Name: City of Ames
Project Location: Ames Ash Pond
200 East 5th Street, Ames, IA

SCS Engineers CQA Technician: Chris Calhoun
Matt Kuhlenengel
SCS Engineers Project Name: Ames Ash Pond Closure
SCS Engineers Project Number: 27219356.02

= No of Passed Tests
= No of Failed Tests

Date of Interest
dd-mmm-yy
Note if blank will consider all dates.

Max Pressure Drop = 4.00 psi
Elapsed Test Interval= 2.0 min

Seaming Information											These columns Intentionally Left Blank				Non-Destructive Testing Information											
Date dd-mmm-yy	Time hhmm (24)	Seam Numbers			Seam Length	Seamer Initials	Machine Number	Trial Weld #	Direction Seamed	Destruct Number	Material (Top 1st)					Date Tested dd-mmm-yy	Addn'l Test #'s	Tester Initials	Pressure Start	Pressure End	Pressure +/-	Time [hhmm (24)] Start	Time [hhmm (24)] End	P/F	Vacuum Box P/F	Location/Comments (Tech #)
25-May-25	0927	P-77	P-78		23 ft	JV	6416	13	WEST		S/S					25-May-25		JL	30	30	0	1001	1003	Pass		
25-May-25	1000	P-66	P-78		17 ft	JV	6416	15	NORTH		T/T					25-May-25		JL	30	30	0	1003	1005	Pass		
25-May-25	1002	P-66	P-76		23 ft	JV	6416	15	NORTH		T/T					25-May-25		JL	30	30	0	1006	1008	Pass		
25-May-25	1006	P-66	P-75		23 ft	JV	6416	15	NE		T/T					25-May-25		JL	30	30	0	1010	1012	Pass		
25-May-25	1009	P-65	P-75		7 ft	JV	6416	15	NE		T/T					25-May-25		JL	30	29	1	1013	1015	Pass		
25-May-25	1010	P-65	P-73		22 ft	JV	6416	15	NE		T/T					25-May-25		JL	30	30	0	1015	1017	Pass		
25-May-25	1013	P-64	P-73		10 ft	JV	6416	15	NE		T/T					25-May-25		JL	30	28	2	1018	1020	Pass		
25-May-25	1015	P-64	P-71		19 ft	JV	6416	15	NE		T/T					25-May-25		JL	30	30	0	1019	1021	Pass		
25-May-25	1018	P-63	P-71		13 ft	JV	6416	15	NE		T/T					25-May-25		JL	30	30	0	1023	1025	Pass		
25-May-25	1020	P-63	P-70		16 ft	JV	6416	15	NE		T/T					25-May-25		JL	30	30	0	1024	1026	Pass		
25-May-25	1022	P-62	P-70		16 ft	JV	6416	15	NE	DS-20	T/T					25-May-25		JL	30	30	0	1025	1027	Pass		
25-May-25	1024	P-62	P-69		13 ft	JV	6416	15	NE		T/T					25-May-25		JL	30	30	0	1027	1029	Pass		
25-May-25	1027	P-61	P-69		20 ft	JV	6416	15	NE		T/T					25-May-25		JL	30	30	0	1030	1032	Pass		
25-May-25	1031	P-61	P-68		10 ft	JV	6416	15	NE		T/T					25-May-25		JL	30	30	0	1032	1034	Pass		
25-May-25	1032	P-60	P-68		22 ft	JV	6416	15	NE		T/T					25-May-25		JL	30	30	0	1035	1037	Pass		
25-May-25	1036	P-60	P-67		7 ft	JV	6416	15	NE		T/T					25-May-25		JL	30	30	0	1036	1038	Pass		
25-May-25	1036	P-59	P-67		28 ft	JV	6416	15	NE		T/T					25-May-25		JL	30	30	0	1040	1042	Pass		
31-May-25	1126	P-38	P-79		374 ft	JOV	6421	22	WEST		S/S					31-May-25		JL	30	30	0	1207	1209	Pass		
31-May-25	1200	P-39	P-79		37 ft	JOV	6421	22	WEST		S/S					31-May-25		JL	30	28	2	1320	1322	Pass		
31-May-25	1145	P-40	P-79		411 ft	JV	6416	25	WEST	DS-24	S/T					31-May-25	4, 5	JL	30	30	0	1340	1342	Pass		Eeos to R-98

I.9 – Additional Non-Destructive Test Record

ADDITIONAL NON-DESTRUCTIVE TEST RECORD

SCS Engineers CQA Technician: Chris Calhoun
Matt Kuhlenengel

Client Name: City of Ames
Project Location: Ames Ash Pond
200 East 5th Street, Ames, IA

SCS Engineers Project Name: Ames Ash Pond Closure

SCS Engineers Project Number: 27219356.02

Max Pressure Drop: 4.0 psi
Test Standard Elapsed Time: 2 min

Test Number	Test Date dd-mm-yy	Seam Number				Tester Initials	Pressure			Time (hhmm 0 to 24 hr)		Pressure Test P/F	Vacuum Box P/F	Location/Comments (Tech #)
							Start	End	+/-	Start	End			
1	23-May-25	P16	P17			ASB	30 psi	28 psi	2 psi	1613	1615	Pass		R-83 to neos
2	24-May-25	P34	P35			JEL	30 psi	30 psi	0 psi	0904	0906	Pass		R-28 to weos
3	24-May-25	P42	P51			JL	30 psi	30 psi	0 psi	1645	1647	Pass		R-62 to R-63
4	31-May-25	P40	P79			JL	30 psi	28 psi	2 psi	1333	1335	Pass		R-96 to R-98
5	31-May-25	P40	P79			JL	30 psi	30 psi	0 psi	1334	1336	Pass		92' from weos

I.10 – Repair Record

REPAIR RECORD

Client Name: City of Ames
Project Location: Ames Ash Pond
200 East 5th Street, Ames, IA
SCS Engineers Project Name: Ames Ash Pond Closure
SCS Engineers Project Number: 27219356.02

SCS Engineers CQA Technician: Chris Calhoun
Matt Kuhlenengel

Date of Interest (enter mm-dd-yy): Note if blank will consider all dates.

"x" indicates criteria applies to this project		x	
Population:	Total Seam	Machine	Welder
Destruct Test Frequency (1 per)	500 ft	500 ft	500 ft
Number of Required Destructs	0 ea	3 ea	2 ea

Minimum # of Destructs Required
3 ea
For Project Period

Repair Number	Panel/ Seam				Repairer Initials	Machine Number	Repair Type	Repair size Length (ft)		Width (ft)	Trial Weld Number	Test Date dd-mm-yy	Tester Initials	Test P/F	Location/Comments (Tech #)	Time hhmm (24)
R-1	9	10	36	37	JS	7541	Patch	5.0 ft	x	2.0 ft	16	28-May-25	JL	Pass	Intersection	0704
R-2	8	9	35	36	JS	7541	Patch	10.0 ft	x	2.5 ft	16	5-28-25	JL	Pass	Intersection	0936
R-3	75	76	77		JV	7542	Patch	2.0 ft	x	2.0 ft	17	5-28-25	JL	Pass	Intersection	0920
R-4	66	75	76		JV	7542	Patch	2.0 ft	x	2.0 ft	17	5-28-25	JL	Pass	Intersection	0914
R-5	65	66	75		JV	7542	Patch	2.0 ft	x	2.0 ft	17	5-28-25	JL	Pass	Intersection	0925
R-6	65	73	75		JV	7542	Patch	2.0 ft	x	2.0 ft	17	5-28-25	JL	Pass	Intersection	0929
R-7	64	65	73		JV	7542	Patch	2.0 ft	x	2.0 ft	17	5-28-25	JL	Pass	Intersection	0935
R-8	64	71	73		JV	7542	Patch	2.0 ft	x	2.0 ft	17	5-28-25	JL	Pass	Intersection	0940
R-9	75	77			JV	7542	Patch	6.0 ft	x	2.0 ft	19	5-28-25	JL	Pass	DS-19	0707
R-10	74	75			JV	7542	Patch	5.0 ft	x	2.0 ft	19	5-28-25	JL	Pass	DS-18	0716
R-11	73	74	75		JG	076	Patch	2.0 ft	x	2.0 ft	18	5-28-25	JL	Pass	Intersection	0700
R-12	72	73	74		JG	076	Patch	2.0 ft	x	2.0 ft	18	5-28-25	JL	Pass	Intersection	0705
R-13	71	72	73		JG	076	Patch	2.0 ft	x	2.0 ft	18	5-28-25	JL	Pass	Intersection	0710
R-14	70	71	72		JG	076	Patch	2.0 ft	x	2.0 ft	18	5-28-25	JL	Pass	Intersection	0726
R-15	63	64	71		JV	7542	Patch	2.5 ft	x	2.0 ft	19	5-28-25	JL	Pass	Intersection	0722
R-16	63	70	71		JV	7542	Patch	2.0 ft	x	2.0 ft	19	5-28-25	JL	Pass	Intersection	0731
R-17	62	63	70		JV	7542	Patch	2.5 ft	x	2.0 ft	19	5-28-25	JL	Pass	Intersection	0740
R-18	68	69			JG	076	Patch	5.5 ft	x	2.0 ft	18	5-28-25	JL	Pass	DS-17	0748
R-19	62	70			JV	7542	Patch	6.0 ft	x	2.0 ft	19	5-28-25	JL	Pass	DS-20	0742
R-20	62	69	70		JV	7542	Patch	2.0 ft	x	2.0 ft	19	5-28-25	JL	Pass	Intersection	0801
R-21	66	76	77	78	JV	7542	Patch	4.0 ft	x	2.5 ft	19	5-28-25	JL	Pass	Intersection	0700
R-22	61	62	69		JV	7542	Patch	2.0 ft	x	2.0 ft	19	5-28-25	JL	Pass	Intersection	0806
R-23	8	9			JS	7541	Patch	6.0 ft	x	2.0 ft	20	5-28-24	JL	Pass	DS-2	0650
R-24	8	R-2			JS	7541	Patch	5.0 ft	x	2.0 ft	20	5-28-24	JL	Pass	DS-21	0721
R-25	34	35			JS	7541	Patch	5.5 ft	x	2.0 ft	20	5-28-25	JL	Pass	DS-10	0724
R-26	7	8	34	35	JS	7541	Patch	9.5 ft	x	2.0 ft	20	5-28-25	JL	Pass	Intersection	0758
R-27	6	7	33	34	JS	7541	Patch	9.5 ft	x	2.0 ft	20	5-28-25	JL	Pass	Intersection	0816
R-28	34	35			JS	7541	Patch	2.0 ft	x	1.5 ft	20	5-28-25	JL	Pass	6' from weos	0742
R-29	32	33			JS	7541	Patch	5.5 ft	x	2.0 ft	20	5-28-25	JL	Pass	DS-9	0748

REPAIR RECORD

Client Name: City of Ames
Project Location: Ames Ash Pond
200 East 5th Street, Ames, IA
SCS Engineers Project Name: Ames Ash Pond Closure
SCS Engineers Project Number: 27219356.02

SCS Engineers CQA Technician: Chris Calhoun
Matt Kuhlenengel

Date of Interest (enter mm-dd-yy): Note if blank will consider all dates.

"x" indicates criteria applies to this project		x	
Population:	Total Seam	Machine	Welder
Destruct Test Frequency (1 per)	500 ft	500 ft	500 ft
Number of Required Destructs	0 ea	3 ea	2 ea

Minimum # of Destructs Required
3 ea
For Project Period

Repair Number	Panel/ Seam				Repairer Initials	Machine Number	Repair Type	Repair size Length (ft)		Width (ft)	Trial Weld Number	Test Date dd-mm-yy	Tester Initials	Test P/F	Location/Comments (Tech #)	Time hhmm (24)
R-30	5	6	32	33	JS	7541	Patch	12.0 ft	x	2.0 ft	20	5-28-25	JL	Pass	Intersection	0826
R-31	5	6			JS	7541	Patch	5.5 ft	x	2.0 ft	20	5-28-25	JL	Pass	DS-1	0837
R-32	4	5	32		JS	7541	Patch	3.0 ft	x	2.0 ft	20	5-28-25	JL	Pass	Intersection	0843
R-33	4	31	32		JS	7541	Patch	8.5 ft	x	2.0 ft	20	5-28-25	JL	Pass	Intersection, DS-11	0849
R-34	3	4			JS	7541	Patch	5.5 ft	x	2.0 ft	20	5-28-25	JL	Pass	DS-5	0852
R-35	3	4	31		JS	7541	Patch	2.5 ft	x	2.0 ft	20	5-28-25	JL	Pass	Intersection	0856
R-36	3	30	31		JS	7541	Patch	2.5 ft	x	2.0 ft	20	5-28-25	JL	Pass	Intersection	0858
R-37	2	3	30		JS	7541	Patch	2.5 ft	x	2.0 ft	20	5-28-25	JL	Pass	Intersection	0903
R-38	2	29	30		JS	7541	Patch	3.0 ft	x	2.0 ft	20	5-28-25	JL	Pass	Intersection	0905
R-39	1	2	29		JS	7541	Patch	2.5 ft	x	2.0 ft	20	5-28-25	JL	Pass	Intersection	0910
R-40	61	68	69		JV	7542	Patch	4.0 ft	x	2.0 ft	19	5-28-25	JL	Pass	Intersection	0828
R-41	60	61	68		JV	7542	Patch	2.0 ft	x	1.5 ft	19	5-28-25	JL	Pass	Intersection	0833
R-42	60	67	68		JV	7542	Patch	2.0 ft	x	2.0 ft	19	5-28-25	JL	Pass	Intersection	0838
R-43	59	60	67		JV	7542	Patch	2.0 ft	x	1.5 ft	19	5-28-25	JL	Pass	Intersection	0844
R-44	40/41	50	59	60	JV	7542	Patch	5.5 ft	x	3.5 ft	19	5-28-25	JL	Pass	Intersection	0859
R-45	62	63			JV	7542	Patch	5.5 ft	x	2.0 ft	19	5-28-25	JL	Pass	DS-16	0916
R-46	62	R-47			JV	7542	Patch	3.0 ft	x	3.0 ft	19	5-28-25	JL	Pass	West pipe boot, SW cleanouts	0935
R-47	62	R-46			JV	7542	Patch	3.0 ft	x	2.5 ft	19	5-28-25	JL	Pass	East pipe boot, SW cleanouts	0940
R-48	55	56			JG	076	Patch	5.5 ft	x	2.0 ft	18	5-28-25	JL	Pass	DS-14	0815
R-49	48	49	58		JG	076	Patch	2.0 ft	x	2.0 ft	18	5-28-25	JL	Pass	Intersection	0837
R-50	48	57	58		JG	076	Patch	2.0 ft	x	1.5 ft	18	5-28-25	JL	Pass	Intersection	0842
R-51	47	48	57		JG	076	Patch	2.0 ft	x	1.5 ft	18	5-28-25	JL	Pass	Intersection	0847
R-52	47	56	57		JG	076	Patch	2.0 ft	x	1.5 ft	18	5-28-25	JL	Pass	Intersection	0852
R-53	46	47	56		JG	076	Patch	2.0 ft	x	2.0 ft	18	5-28-25	JL	Pass	Intersection	0907
R-54	46	55	56		JG	076	Patch	2.0 ft	x	2.0 ft	18	5-28-25	JL	Pass	Intersection	0917
R-55	45	46	55		JG	076	Patch	2.0 ft	x	2.0 ft	18	5-28-25	JL	Pass	Intersection	0926
R-56	45	54	55		JG	076	Patch	2.0 ft	x	2.0 ft	18	5-28-25	JL	Pass	Intersection	0930
R-57	45	54			JV	7542	Patch	5.5 ft	x	2.0 ft	19	5-28-25	JL	Pass	DS-15	1003
R-58	44	45	53	54	JV	7542	Patch	3.5 ft	x	2.0 ft	19	5-28-25	JL	Pass	Intersection	1008

REPAIR RECORD

Client Name: City of Ames
Project Location: Ames Ash Pond
200 East 5th Street, Ames, IA
SCS Engineers Project Name: Ames Ash Pond Closure
SCS Engineers Project Number: 27219356.02

SCS Engineers CQA Technician: Chris Calhoun
Matt Kuhlenengel

Date of Interest (enter mm-dd-yy): Note if blank will consider all dates.

"x" indicates criteria applies to this project		x	
Population:	Total Seam	Machine	Welder
Destruct Test Frequency (1 per)	500 ft	500 ft	500 ft
Number of Required Destructs	0 ea	3 ea	2 ea

Minimum # of Destructs Required
3 ea
For Project Period

Repair Number	Panel/ Seam				Repairer Initials	Machine Number	Repair Type	Repair size Length (ft)		Width (ft)	Trial Weld Number	Test Date dd-mm-yy	Tester Initials	Test P/F	Location/Comments (Tech #)	Time hhmm (24)
R-59	45	46			JG	076	Patch	5.5 ft	x	2.0 ft	18	5-28-25	JL	Pass	DS-13	1000
R-60	43	44	52	53	JV	7542	Patch	3.5 ft	x	2.0 ft	19	5-28-25	JL	Pass	Intersection	1002
R-61	42	43	51	52	JV	7542	Patch	3.5 ft	x	1.5 ft	19	5-28-25	JL	Pass	Intersection	1018
R-62	42	51			JV	7542	Patch	4.5 ft	x	2.0 ft	19	5-28-25	JL	Pass	17' from R-61, 7' from R-63	1023
R-63	41	42	50	51	JV	7542	Patch	3.0 ft	x	2.0 ft	19	5-28-25	JL	Pass	Intersection	1027
R-64	40	41			JG	076	Patch	6.0 ft	x	2.0 ft	18	5-28-25	JL	Pass	DS-12	1013
R-65	43				JG	076	Patch	25.0 ft	x	5.0 ft	18				Eeos to bottom of anchor trench/not tested	1044
R-66	1	20	38	39	JS	7541	Patch	5.0 ft	x	3.0 ft	20	5-28-25	JL	Pass	Intersection	0923
R-67	1	11	20		JS	7541	Patch	2.0 ft	x	2.0 ft	20	5-28-25	JL	Pass	Intersection	0938
R-68	11	20	21		JS	7541	Patch	2.0 ft	x	2.0 ft	20	5-28-25	JL	Pass	Intersection	0942
R-69	11	12	21		JS	7541	Patch	2.0 ft	x	2.0 ft	20	5-28-25	JL	Pass	Intersection	0947
R-70	12	21	22		JS	7541	Patch	2.0 ft	x	2.0 ft	20	5-28-25	JL	Pass	Intersection	0952
R-71	12	13	22		JS	7541	Patch	2.0 ft	x	2.0 ft	20	5-28-25	JL	Pass	Intersection	0958
R-72	13	22	23		JS	7541	Patch	2.0 ft	x	2.0 ft	20	5-28-25	JL	Pass	Intersection	1004
R-73	12	13			JS	7541	Patch	6.0 ft	x	2.0 ft	20	5-28-25	JL	Pass	DS-3	1013
R-74	13	14	23		JS	7541	Patch	2.0 ft	x	2.0 ft	20	5-28-25	JL	Pass	Intersection	1009
R-75	14	23	24		JS	7541	Patch	7.0 ft	x	2.0 ft	20	5-28-25	JL	Pass	Intersection/DS-8	1016
R-76	14	15	24		JS	7541	Patch	2.0 ft	x	2.0 ft	20	5-28-25	JL	Pass	Intersection	1030
R-77	15	24	25		JS	7541	Patch	2.0 ft	x	2.0 ft	20	5-28-25	JL	Pass	Intersection	1034
R-78	15	16	25		JS	7541	Patch	2.0 ft	x	2.0 ft	20	5-28-25	JL	Pass	Intersection	1045
R-79	24	25			JS	7541	Patch	5.5 ft	x	2.0 ft	20	5-28-25	JL	Pass	DS-6	1056
R-80	16	25	26		JS	7541	Patch	2.0 ft	x	2.0 ft	20	5-28-25	JL	Pass	Intersection	1050
R-81	16	17	26		JS	7541	Patch	2.0 ft	x	2.0 ft	20	5-28-25	JL	Pass	Intersection	1105
R-82	16	17			JS	7541	Patch	1.5 ft	x	1.5 ft	20	5-28-25	JL	Pass	23' N of R-81	1109
R-83	17	26	27		JS	7541	Patch	2.0 ft	x	2.0 ft	20	5-28-25	JL	Pass	Intersection	1116
R-84	17	18	27		JS	7541	Patch	2.0 ft	x	2.0 ft	20	5-28-25	JL	Pass	Intersection	1122
R-85	18	27	28		JG	076	Patch	6.5 ft	x	2.0 ft	18	5-28-25	JL	Pass	Intersection/DS-7	1120
R-86	18	19	28		JG	076	Patch	2.0 ft	x	1.5 ft	18	5-28-25	JL	Pass	Intersection	1125
R-87	14	15			JS	7541	Patch	5.5 ft	x	2.0 ft	20	5-28-25	JL	Pass	DS-4	1126

REPAIR RECORD

Client Name: City of Ames
Project Location: Ames Ash Pond
200 East 5th Street, Ames, IA
SCS Engineers Project Name: Ames Ash Pond Closure
SCS Engineers Project Number: 27219356.02

SCS Engineers CQA Technician: Chris Calhoun
Matt Kuhlenengel

Date of Interest (enter mm-dd-yy): _____ Note if blank will consider all dates.

"x" indicates criteria applies to this project		x	
Population:	Total Seam	Machine	Welder
Destruct Test Frequency (1 per)	500 ft	500 ft	500 ft
Number of Required Destructs	0 ea	3 ea	2 ea

Minimum # of Destructs Required
3 ea
For Project Period

Repair Number	Panel/ Seam				Repairer Initials	Machine Number	Repair Type	Repair size Length (ft)		Width (ft)	Trial Weld Number	Test Date dd-mm-yy	Tester Initials	Test P/F	Location/Comments (Tech #)	Time hhmm (24)
R-88	29	38	39		JG	076	Patch	2.0 ft	x	2.0 ft	18	5-28-25	JL	Pass	Intersection	1150
R-89	4	5	R-90		JV	7542	Patch	4.5 ft	x	3.5 ft	21	5-28-25	JL	Pass	West pipe boot, NW cleanouts	1338
R-90	4	R-89			JV	7542	Patch	4.5 ft	x	3.0 ft	21	5-28-25	JL	Pass	East pipe boot, NW cleanouts	1345
R-91	17	R-92			JV	7542	Patch	4.0 ft	x	4.0 ft	21	5-28-25	JL	Pass	East pipe boot, NE cleanouts	1429
R-92	17	R-91			JV	7542	Patch	4.0 ft	x	3.5 ft	21	5-28-25	JL	Pass	West pipe boot, NE cleanouts	1446
R-93	17	R-91	R-92		JV	7542	Patch	5.0 ft	x	1.5 ft	21	5-28-25	JL	Pass	DS-23	1525
R-94	27	R-85			JV	7542	Patch	4.5 ft	x	1.5 ft	21	5-28-25	JL	Pass	DS-22	1534
R-95	38	39	79		JV	7542	Patch	3.0 ft	x	2.0 ft	26	5-31-25	YC	Pass	Intersection	1407
R-96	40	79			JV	7542	Patch	3.5 ft	x	2.0 ft	26	5-31-25	YC	Pass	92' from weos, 13' from W end of R-98	1416
R-97	79				JV	7542	Patch	0.5 ft	x	0.5 ft	26	5-31-25	YC	Pass	Middle of P-79, 7' N of R-98	1419
R-98	40	79			JV	7542	Patch	30.0 ft	x	1.5 ft	26	5-31-25	YC	Pass	13' from E end of R-96'	1426
R-99	40	79			JV	7542	Patch	5.5 ft	x	1.5 ft	26	5-31-25	YC	Pass	DS-24	1500

I.11 – Destructive Test Record

DESTRUCTIVE TEST RECORD

Client Name: City of Ames
SCS Engineers Project Name: Ames Ash Pond Closure
SCS Engineers Project Number: 27219356.02
Project Location: Ames Ash Pond
200 East 5th Street, Ames, IA

Specifications: 40 mil
Material Type: LLDPE

	Fusion	Extrusion	
Peel (P)	≥ 50	≥ 44	lb/in
Shear (S)	≥ 60	≥ 60	lb/in

SCS Engineers CQA Technician: Chris Calhoun
Matt Kuhlenengel

Number of Passing Destruct Tests				Min Req'd Destruct Tests	Net # of Test above Req'd	#VALUE!
Field	Lab	Total	w EOS Field			
24 Tests	0 Tests	24 Tests	#VALUE!	3 Tests	#VALUE!	

Max # of Failing Tests Allowed per P/S Set: 0 ea *Set on Trial Weld Worksheet*

NOTE: ALWAYS CHECK FAILURE CODES ON LAB TEST TOO

Sample ID	Date dd-mmm-yy	Time hhmm (24)	Installer's QC	Seam Number				Seamers Initials	Machine Number	Weld Type		Field Test Values (lbs/in) Coupon 1		Coupon 2		Coupon 3		Coupon 4		Coupon 5		Field Pass/Fail	Lab Pass/Fail	Repair Number	Location (Tech #)
DS-1	27-May-25	0945	YC	5	6			JOV	6421	Fusion	P	104	94	101	102	100	101	101	104	106	107	Pass		R-31	
											S	122		117		127		121		125					
DS-2	27-May-25	1300	YC	8	9			JOV	6421	Fusion	P	102	106	106	106	101	102	108	105	106	99	Pass		R-23	
											S	122		118		124		113		115					
DS-3	27-May-25	1307	YC	13	12			JOV	6421	Fusion	P	112	104	107	95	103	96	93	98	106	107	Pass		R-73	
											S	119		122		123		115		118					
DS-4	27-May-25	1315	YC	15	14			JOV	6421	Fusion	P	100	95	88	95	113	105	94	108	109	105	Pass		R-87	
											S	128		128		124		115		119					
DS-5	27-May-25	1323	YC	4	3			JV	6416	Fusion	P	109	99	105	85	104	102	106	106	109	105	Pass		R-34	
											S	111		125		125		123		112					
DS-6	27-May-25	1330	YC	24	25			JOV	6421	Fusion	P	99	88	110	102	93	91	108	91	96	107	Pass		R-79	
											S	120		124		132		120		118					
DS-7	27-May-25	1338	YC	27	28			JV	6416	Fusion	P	122	125	116	122	115	108	123	105	126	122	Pass		R-85	
											S	116		122		113		118		123					
DS-8	27-May-25	1520	YC	14	23			JV	6416	Fusion	P	90	86	89	83	97	93	84	83	92	92	Pass		R-75	
											S	108		102		104		106		115					
DS-9	27-May-25	1346	YC	33	32			JV	6416	Fusion	P	102	100	97	95	105	99	100	94	91	90	Pass		R-29	
											S	125		112		128		120		119					
DS-10	27-May-25	1354	YC	34	35			JOV	6421	Fusion	P	103	100	101	99	109	102	100	92	111	101	Pass		R-25	
											S	121		122		129		122		120					
DS-11	27-May-25	1401	YC	4	31			JV	6416	Fusion	P	88	85	87	97	88	97	95	96	82	95	Pass		R-33	
											S	122		115		105		123		125					
DS-12	27-May-25	1409	YC	40	41			JV	6416	Fusion	P	94	94	92	93	98	100	93	89	95	92	Pass		R-64	
											S	120		123		121		123		119					
DS-13	27-May-25	1417	YC	45	46			JOV	6421	Fusion	P	91	95	107	95	105	102	106	103	100	95	Pass		R-59	
											S	123		121		124		120		116					
DS-14	27-May-25	1425	YC	56	55			JOV	6421	Fusion	P	108	102	92	107	96	102	105	104	110	96	Pass		R-48	
											S	117		112		118		115		127					
DS-15	27-May-25	1433	YC	45	54			JV	6416	Fusion	P	103	97	103	92	92	99	91	94	101	103	Pass		R-57	
											S	114		102		111		99		115					
DS-16	27-May-25	1527	YC	62	63			JV	6416	Fusion	P	89	86	87	81	99	86	80	88	89	91	Pass		R-45	
											S	114		114		114		114		113					
DS-17	27-May-25	1535	YC	69	68			JOV	6421	Fusion	P	92	97	95	95	89	92	89	97	85	94	Pass		R-18	
											S	112		110		112		107		112					
DS-18	27-May-25	1543	YC	74	75			JOV	6421	Fusion	P	93	98	95	94	97	100	84	92	91	97	Pass		R-10	
											S	116		116		116		115		111					
DS-19	20-May-25	1550	YC	75	77			JV	6416	Fusion	P	100	94	100	95	108	106	103	99	105	97	Pass		R-9	
											S	122		114		115		117		117					
DS-20	27-May-25	1557	YC	62	70			JV	6416	Fusion	P	94	90	90	75	86	94	96	90	94	93	Pass		R-19	
											S	105		108		106		105		99					
DS-21	27-May-25	1605	YC	R-2	8			JS	7541	Extrusion	P	97		73		77		69		87		Pass		R-24	
											S	101		97		98		102		100					

DESTRUCTIVE TEST RECORD

Client Name: City of Ames
SCS Engineers Project Name: Ames Ash Pond Closure
SCS Engineers Project Number: 27219356.02
Project Location: Ames Ash Pond
200 East 5th Street, Ames, IA

Specifications: 40 mil
Material Type: LLDPE

	Fusion	Extrusion	
Peel (P)	≥ 50	≥ 44	lb/in
Shear (S)	≥ 60	≥ 60	lb/in

SCS Engineers CQA Technician: Chris Calhoun
Matt Kuhlenengel

Number of Passing Destruct Tests				Min Req'd Destruct Tests	Net # of Test above Req'd	#VALUE!
Field	Lab	Total	w EOS Field			
24 Tests	0 Tests	24 Tests	#VALUE!	3 Tests	#VALUE!	

Max # of Failing Tests Allowed per P/S Set: 0 ea *Set on Trial Weld Worksheet*

NOTE: ALWAYS CHECK FAILURE CODES ON LAB TEST TOO

Sample ID	Date dd-mmm-yy	Time hhmm (24)	Installer's QC	Seam Number				Seamers Initials	Machine Number	Weld Type		Field Test Values (lbs/in) Coupon 1	Coupon 2	Coupon 3	Coupon 4	Coupon 5	Field Pass/Fail	Lab Pass/Fail	Repair Number	Location (Tech #)
DS-22	28-May-25	1500	YC	R-85	27			JG	76	Extrusion	P	96	56	83	82	72	Pass		R-94	
											S	101	105	105	107	103				
DS-23	28-May-25	1508	YC	R-91	17			JV	7542	Extrusion	P	85	86	82	87	87	Pass		R-93	
											S	91	87	88	87	102				
DS-24	31-May-25	1400	YC	79	40			JV	6416	Fusion	P	86 84	75 80	72 85	81 80	72 70	Pass		R-98	
											S	90	100	86	86	81				

I.12 – Destructive Seam Laboratory Testing

Date: 2025-05-28

Mail To:
Matt Kuhlenengel
SCS Engineers (seams)
14755 Grover St
Omaha , Ne , 68144

Bill To:

SCS Engineers (seams)
27219356.02

e-mail:
mkuhlenengel@scsengineers.com ccalhoun@scsengineers.com mstruzl@scsengineers.com jgarcia@ccawsystems.com

Dear Mr. Kuhlenengel,

Thank you for consulting with TRI/Environmental, Inc. (TRI) for your geosynthetics testing needs. TRI is pleased to submit this final report for laboratory testing.

Project:	**Ames Ash Pond Closure**
TRI Job Reference Number:	**83006**
Material(s) Tested:	(20) Heat Fusion Weld Seam(s) (1) Single Extrusion Weld Seam(s)
Test(s) Requested:	SAME DAY Peel and Shear (ASTM D 6392/GRI GM19/D 4437/NSF 54/882 mod.)

Codes:	
AD	Adhesion Failure (100% Peel)
BRK	Break in sheeting away from Seam edge.
SE	Break in sheeting at edge of seam.
AD-BRK	Break in sheeting after some adhesion failure - partial peel.
SIP	Separation in the plane of the sheet (leaving the bond intact).
FTB	Film tearing bond (all non "AD" failures).
NON-FTB	100% peel.

If you have any questions or require any additional information, please call us at 1-800-880-8378.
Sincerely,
sigfile
geolab

Geosynthetic Services Division
http://www.geosyntheticstestinc.com

The testing herein is based upon accepted industry practice as well as the test method listed. Test results reported herein do not apply to samples other than those tested. TRI neither accepts responsibility for nor makes claim as to the final use and purpose of the material. TRI observes and maintains client confidentiality. TRI limits reproduction of this report, except in full, without prior approval of TRI.

DESTRUCTIVE SEAM QUALITY ASSURANCE TEST RESULTS
TRI Client: SCS Engineers (seams)
Project: Ames Ash Pond Closure

Material: 40 mil. LLDPE
SAME DAY Peel and Shear (ASTM D 6392/GRI GM19/D 4437/NSF 54/882 mod.)
TRI Log#: 83006

	TEST REPLICATE NUMBER					
PARAMETER	1	2	3	4	5	MEAN
Sample ID: DS-1 | Weld: Heat Fusion						
Side: A						**Peel A**
Peel Strength (ppi)	107	113	106	109	106	**108**
Peel Incursion (%)	<5	<5	<5	<5	<5	
Peel Locus Of Failure Code	SE	SE	SE	SE	SE	
Peel NSF Failure Code	FTB	FTB	FTB	FTB	FTB	
Side: B						**Peel B**
Peel Strength (ppi)	99	106	110	110	108	**107**
Peel Incursion (%)	<5	<5	<5	<5	<5	
Peel Locus Of Failure Code	SE	SE	SE	SE	SE	
Peel NSF Failure Code	FTB	FTB	FTB	FTB	FTB	
Shear						**Shear**
Shear Strength (ppi)	118	119	123	118	118	**119**
Shear Elongation @ Break (%)	>50	>50	>50	>50	>50	
Sample ID: DS-2 | Weld: Heat Fusion						
Side: A						**Peel A**
Peel Strength (ppi)	105	99	109	109	106	**106**
Peel Incursion (%)	<5	<5	<5	<5	<5	
Peel Locus Of Failure Code	SE	SE	SE	SE	SE	
Peel NSF Failure Code	FTB	FTB	FTB	FTB	FTB	
Side: B						**Peel B**
Peel Strength (ppi)	106	111	106	106	109	**108**
Peel Incursion (%)	<5	<5	<5	<5	<5	
Peel Locus Of Failure Code	SE	SE	SE	SE	SE	
Peel NSF Failure Code	FTB	FTB	FTB	FTB	FTB	
Shear						**Shear**
Shear Strength (ppi)	117	112	112	109	112	**112**
Shear Elongation @ Break (%)	>50	>50	>50	>50	>50	

The testing herein is based upon accepted industry practice as well as the test method listed. Test results reported herein do not apply to samples other than those tested. TRI neither accepts responsibility for nor makes claim as to the final use and purpose of the material. TRI observes and maintains client confidentiality. TRI limits reproduction of this report, except in full, without prior approval of TRI.

DESTRUCTIVE SEAM QUALITY ASSURANCE TEST RESULTS
TRI Client: SCS Engineers (seams)
Project: Ames Ash Pond Closure

Material: 40 mil. LLDPE
SAME DAY Peel and Shear (ASTM D 6392/GRI GM19/D 4437/NSF 54/882 mod.)
TRI Log#: 83006

	TEST REPLICATE NUMBER					
PARAMETER	1	2	3	4	5	MEAN
Sample ID: DS-3 | Weld: Heat Fusion						
Side: A						**Peel A**
Peel Strength (ppi)	104	105	103	108	107	**105**
Peel Incursion (%)	<5	<5	<5	<5	<5	
Peel Locus Of Failure Code	SE	SE	SE	SE	SE	
Peel NSF Failure Code	FTB	FTB	FTB	FTB	FTB	
Side: B						**Peel B**
Peel Strength (ppi)	95	103	105	108	96	**101**
Peel Incursion (%)	<5	<5	<5	<5	<5	
Peel Locus Of Failure Code	SE	SE	SE	SE	SE	
Peel NSF Failure Code	FTB	FTB	FTB	FTB	FTB	
Shear						**Shear**
Shear Strength (ppi)	117	121	119	120	117	**119**
Shear Elongation @ Break (%)	>50	>50	>50	>50	>50	
Sample ID: DS-4 | Weld: Heat Fusion						
Side: A						**Peel A**
Peel Strength (ppi)	101	107	109	100	108	**105**
Peel Incursion (%)	<5	<5	<5	<5	<5	
Peel Locus Of Failure Code	SE	SE	SE	SE	SE	
Peel NSF Failure Code	FTB	FTB	FTB	FTB	FTB	
Side: B						**Peel B**
Peel Strength (ppi)	107	106	106	110	109	**108**
Peel Incursion (%)	<5	<5	<5	<5	<5	
Peel Locus Of Failure Code	SE	SE	SE	SE	SE	
Peel NSF Failure Code	FTB	FTB	FTB	FTB	FTB	
Shear						**Shear**
Shear Strength (ppi)	116	119	116	116	121	**118**
Shear Elongation @ Break (%)	>50	>50	>50	>50	>50	

The testing herein is based upon accepted industry practice as well as the test method listed. Test results reported herein do not apply to samples other than those tested. TRI neither accepts responsibility for nor makes claim as to the final use and purpose of the material. TRI observes and maintains client confidentiality. TRI limits reproduction of this report, except in full, without prior approval of TRI.

DESTRUCTIVE SEAM QUALITY ASSURANCE TEST RESULTS
TRI Client: SCS Engineers (seams)
Project: Ames Ash Pond Closure

Material: 40 mil. LLDPE
SAME DAY Peel and Shear (ASTM D 6392/GRI GM19/D 4437/NSF 54/882 mod.)
TRI Log#: 83006

	TEST REPLICATE NUMBER					
PARAMETER	1	2	3	4	5	MEAN
Sample ID: DS-5 | Weld: Heat Fusion						
Side: A						**Peel A**
Peel Strength (ppi)	101	101	96	99	103	**100**
Peel Incursion (%)	<5	<5	<5	<5	<5	
Peel Locus Of Failure Code	SE	SE	SE	SE	SE	
Peel NSF Failure Code	FTB	FTB	FTB	FTB	FTB	
Side: B						**Peel B**
Peel Strength (ppi)	100	99	100	99	96	**99**
Peel Incursion (%)	<5	<5	<5	<5	<5	
Peel Locus Of Failure Code	SE	SE	SE	SE	SE	
Peel NSF Failure Code	FTB	FTB	FTB	FTB	FTB	
Shear						**Shear**
Shear Strength (ppi)	118	119	120	117	117	**118**
Shear Elongation @ Break (%)	>50	>50	>50	>50	>50	
Sample ID: DS-6 | Weld: Heat Fusion						
Side: A						**Peel A**
Peel Strength (ppi)	102	106	101	106	103	**104**
Peel Incursion (%)	<5	<5	<5	<5	<5	
Peel Locus Of Failure Code	SE	SE	SE	SE	SE	
Peel NSF Failure Code	FTB	FTB	FTB	FTB	FTB	
Side: B						**Peel B**
Peel Strength (ppi)	96	115	106	97	111	**105**
Peel Incursion (%)	<5	<5	<5	<5	<5	
Peel Locus Of Failure Code	SE	SE	SE	SE	SE	
Peel NSF Failure Code	FTB	FTB	FTB	FTB	FTB	
Shear						**Shear**
Shear Strength (ppi)	121	119	120	118	114	**118**
Shear Elongation @ Break (%)	>50	>50	>50	>50	>50	

The testing herein is based upon accepted industry practice as well as the test method listed. Test results reported herein do not apply to samples other than those tested. TRI neither accepts responsibility for nor makes claim as to the final use and purpose of the material. TRI observes and maintains client confidentiality. TRI limits reproduction of this report, except in full, without prior approval of TRI.

DESTRUCTIVE SEAM QUALITY ASSURANCE TEST RESULTS
TRI Client: SCS Engineers (seams)
Project: Ames Ash Pond Closure

Material: 40 mil. LLDPE
SAME DAY Peel and Shear (ASTM D 6392/GRI GM19/D 4437/NSF 54/882 mod.)
TRI Log#: 83006

	TEST REPLICATE NUMBER					
PARAMETER	1	2	3	4	5	MEAN
Sample ID: DS-7 | Weld: Heat Fusion						
Side: A						**Peel A**
Peel Strength (ppi)	99	99	94	97	90	**96**
Peel Incursion (%)	<5	<5	<5	<5	<5	
Peel Locus Of Failure Code	SE	SE	SE	SE	SE	
Peel NSF Failure Code	FTB	FTB	FTB	FTB	FTB	
Side: B						**Peel B**
Peel Strength (ppi)	104	106	96	104	98	**102**
Peel Incursion (%)	<5	<5	<5	<5	<5	
Peel Locus Of Failure Code	SE	SE	SE	SE	SE	
Peel NSF Failure Code	FTB	FTB	FTB	FTB	FTB	
Shear						**Shear**
Shear Strength (ppi)	117	117	117	118	119	**118**
Shear Elongation @ Break (%)	>50	>50	>50	>50	>50	
Sample ID: DS-8 | Weld: Heat Fusion						
Side: A						**Peel A**
Peel Strength (ppi)	82	93	84	91	95	**89**
Peel Incursion (%)	<5	<5	<5	<5	<5	
Peel Locus Of Failure Code	SE	SE	SE	SE	SE	
Peel NSF Failure Code	FTB	FTB	FTB	FTB	FTB	
Side: B						**Peel B**
Peel Strength (ppi)	90	93	92	93	98	**93**
Peel Incursion (%)	<5	<5	<5	<5	<5	
Peel Locus Of Failure Code	SE	SE	SE	SE	SE	
Peel NSF Failure Code	FTB	FTB	FTB	FTB	FTB	
Shear						**Shear**
Shear Strength (ppi)	104	106	102	101	100	**103**
Shear Elongation @ Break (%)	>50	>50	>50	>50	>50	

The testing herein is based upon accepted industry practice as well as the test method listed. Test results reported herein do not apply to samples other than those tested. TRI neither accepts responsibility for nor makes claim as to the final use and purpose of the material. TRI observes and maintains client confidentiality. TRI limits reproduction of this report, except in full, without prior approval of TRI.

DESTRUCTIVE SEAM QUALITY ASSURANCE TEST RESULTS
TRI Client: SCS Engineers (seams)
Project: Ames Ash Pond Closure

Material: 40 mil. LLDPE
SAME DAY Peel and Shear (ASTM D 6392/GRI GM19/D 4437/NSF 54/882 mod.)
TRI Log#: 83006

	TEST REPLICATE NUMBER					
PARAMETER	1	2	3	4	5	MEAN
Sample ID: DS-9 | Weld: Heat Fusion						
Side: A						**Peel A**
Peel Strength (ppi)	102	102	103	99	100	**101**
Peel Incursion (%)	<5	<5	<5	<5	<5	
Peel Locus Of Failure Code	SE	SE	SE	SE	SE	
Peel NSF Failure Code	FTB	FTB	FTB	FTB	FTB	
Side: B						**Peel B**
Peel Strength (ppi)	105	104	104	102	100	**103**
Peel Incursion (%)	<5	<5	<5	<5	<5	
Peel Locus Of Failure Code	SE	SE	SE	SE	SE	
Peel NSF Failure Code	FTB	FTB	FTB	FTB	FTB	
Shear						**Shear**
Shear Strength (ppi)	122	119	119	122	122	**121**
Shear Elongation @ Break (%)	>50	>50	>50	>50	>50	
Sample ID: DS-10 | Weld: Heat Fusion						
Side: A						**Peel A**
Peel Strength (ppi)	111	110	105	112	108	**109**
Peel Incursion (%)	<5	<5	<5	<5	<5	
Peel Locus Of Failure Code	SE	SE	SE	SE	SE	
Peel NSF Failure Code	FTB	FTB	FTB	FTB	FTB	
Side: B						**Peel B**
Peel Strength (ppi)	106	104	103	106	103	**104**
Peel Incursion (%)	<5	<5	<5	<5	<5	
Peel Locus Of Failure Code	SE	SE	SE	SE	SE	
Peel NSF Failure Code	FTB	FTB	FTB	FTB	FTB	
Shear						**Shear**
Shear Strength (ppi)	124	123	118	120	121	**121**
Shear Elongation @ Break (%)	>50	>50	>50	>50	>50	

The testing herein is based upon accepted industry practice as well as the test method listed. Test results reported herein do not apply to samples other than those tested. TRI neither accepts responsibility for nor makes claim as to the final use and purpose of the material. TRI observes and maintains client confidentiality. TRI limits reproduction of this report, except in full, without prior approval of TRI.

DESTRUCTIVE SEAM QUALITY ASSURANCE TEST RESULTS
TRI Client: SCS Engineers (seams)
Project: Ames Ash Pond Closure

Material: 40 mil. LLDPE
SAME DAY Peel and Shear (ASTM D 6392/GRI GM19/D 4437/NSF 54/882 mod.)
TRI Log#: 83006

	TEST REPLICATE NUMBER					
PARAMETER	1	2	3	4	5	MEAN
Sample ID: DS-11 | Weld: Heat Fusion						
Side: A						**Peel A**
Peel Strength (ppi)	91	93	95	102	79	**92**
Peel Incursion (%)	<5	<5	<5	<5	<5	
Peel Locus Of Failure Code	SE	SE	SE	SE	SE	
Peel NSF Failure Code	FTB	FTB	FTB	FTB	FTB	
Side: B						**Peel B**
Peel Strength (ppi)	102	89	92	95	95	**95**
Peel Incursion (%)	<5	<5	<5	<5	<5	
Peel Locus Of Failure Code	SE	SE	SE	SE	SE	
Peel NSF Failure Code	FTB	FTB	FTB	FTB	FTB	
Shear						**Shear**
Shear Strength (ppi)	109	106	103	106	100	**105**
Shear Elongation @ Break (%)	>50	>50	>50	>50	>50	
Sample ID: DS-12 | Weld: Heat Fusion						
Side: A						**Peel A**
Peel Strength (ppi)	101	92	98	97	98	**97**
Peel Incursion (%)	<5	<5	<5	<5	<5	
Peel Locus Of Failure Code	SE	SE	SE	SE	SE	
Peel NSF Failure Code	FTB	FTB	FTB	FTB	FTB	
Side: B						**Peel B**
Peel Strength (ppi)	103	100	96	93	97	**98**
Peel Incursion (%)	<5	<5	<5	<5	<5	
Peel Locus Of Failure Code	SE	SE	SE	SE	SE	
Peel NSF Failure Code	FTB	FTB	FTB	FTB	FTB	
Shear						**Shear**
Shear Strength (ppi)	115	117	118	117	118	**117**
Shear Elongation @ Break (%)	>50	>50	>50	>50	>50	

The testing herein is based upon accepted industry practice as well as the test method listed. Test results reported herein do not apply to samples other than those tested. TRI neither accepts responsibility for nor makes claim as to the final use and purpose of the material. TRI observes and maintains client confidentiality. TRI limits reproduction of this report, except in full, without prior approval of TRI.

DESTRUCTIVE SEAM QUALITY ASSURANCE TEST RESULTS
TRI Client: SCS Engineers (seams)
Project: Ames Ash Pond Closure

Material: 40 mil. LLDPE
SAME DAY Peel and Shear (ASTM D 6392/GRI GM19/D 4437/NSF 54/882 mod.)
TRI Log#: 83006

	TEST REPLICATE NUMBER					
PARAMETER	1	2	3	4	5	MEAN
Sample ID: DS-13 | Weld: Heat Fusion						
Side: A						**Peel A**
Peel Strength (ppi)	108	103	97	111	111	**106**
Peel Incursion (%)	<5	<5	<5	<5	<5	
Peel Locus Of Failure Code	SE	SE	SE	SE	SE	
Peel NSF Failure Code	FTB	FTB	FTB	FTB	FTB	
Side: B						**Peel B**
Peel Strength (ppi)	105	105	117	102	110	**108**
Peel Incursion (%)	<5	<5	<5	<5	<5	
Peel Locus Of Failure Code	SE	SE	SE	SE	SE	
Peel NSF Failure Code	FTB	FTB	FTB	FTB	FTB	
Shear						**Shear**
Shear Strength (ppi)	118	117	118	118	115	**117**
Shear Elongation @ Break (%)	>50	>50	>50	>50	>50	
Sample ID: DS-14 | Weld: Heat Fusion						
Side: A						**Peel A**
Peel Strength (ppi)	97	101	101	99	101	**100**
Peel Incursion (%)	<5	<5	<5	<5	<5	
Peel Locus Of Failure Code	SE	SE	SE	SE	SE	
Peel NSF Failure Code	FTB	FTB	FTB	FTB	FTB	
Side: B						**Peel B**
Peel Strength (ppi)	101	112	108	109	110	**108**
Peel Incursion (%)	<5	<5	<5	<5	<5	
Peel Locus Of Failure Code	SE	SE	SE	SE	SE	
Peel NSF Failure Code	FTB	FTB	FTB	FTB	FTB	
Shear						**Shear**
Shear Strength (ppi)	112	108	112	111	111	**111**
Shear Elongation @ Break (%)	>50	>50	>50	>50	>50	

The testing herein is based upon accepted industry practice as well as the test method listed. Test results reported herein do not apply to samples other than those tested. TRI neither accepts responsibility for nor makes claim as to the final use and purpose of the material. TRI observes and maintains client confidentiality. TRI limits reproduction of this report, except in full, without prior approval of TRI.

DESTRUCTIVE SEAM QUALITY ASSURANCE TEST RESULTS
TRI Client: SCS Engineers (seams)
Project: Ames Ash Pond Closure

Material: 40 mil. LLDPE
SAME DAY Peel and Shear (ASTM D 6392/GRI GM19/D 4437/NSF 54/882 mod.)
TRI Log#: 83006

	TEST REPLICATE NUMBER					
PARAMETER	1	2	3	4	5	MEAN
Sample ID: DS-15 | Weld: Heat Fusion						
Side: A						**Peel A**
Peel Strength (ppi)	91	95	93	94	96	**94**
Peel Incursion (%)	<5	<5	<5	<5	<5	
Peel Locus Of Failure Code	SE	SE	SE	SE	SE	
Peel NSF Failure Code	FTB	FTB	FTB	FTB	FTB	
Side: B						**Peel B**
Peel Strength (ppi)	84	103	94	99	102	**96**
Peel Incursion (%)	<5	<5	<5	<5	<5	
Peel Locus Of Failure Code	SE	SE	SE	SE	SE	
Peel NSF Failure Code	FTB	FTB	FTB	FTB	FTB	
Shear						**Shear**
Shear Strength (ppi)	108	106	106	103	108	**106**
Shear Elongation @ Break (%)	>50	>50	>50	>50	>50	
Sample ID: DS-16 | Weld: Heat Fusion						
Side: A						**Peel A**
Peel Strength (ppi)	93	88	92	94	97	**93**
Peel Incursion (%)	<5	<5	<5	<5	<5	
Peel Locus Of Failure Code	SE	SE	SE	SE	SE	
Peel NSF Failure Code	FTB	FTB	FTB	FTB	FTB	
Side: B						**Peel B**
Peel Strength (ppi)	102	99	100	103	98	**100**
Peel Incursion (%)	<5	<5	<5	<5	<5	
Peel Locus Of Failure Code	SE	SE	SE	SE	SE	
Peel NSF Failure Code	FTB	FTB	FTB	FTB	FTB	
Shear						**Shear**
Shear Strength (ppi)	115	114	115	116	115	**115**
Shear Elongation @ Break (%)	>50	>50	>50	>50	>50	

The testing herein is based upon accepted industry practice as well as the test method listed. Test results reported herein do not apply to samples other than those tested. TRI neither accepts responsibility for nor makes claim as to the final use and purpose of the material. TRI observes and maintains client confidentiality. TRI limits reproduction of this report, except in full, without prior approval of TRI.

DESTRUCTIVE SEAM QUALITY ASSURANCE TEST RESULTS
TRI Client: SCS Engineers (seams)
Project: Ames Ash Pond Closure

Material: 40 mil. LLDPE
SAME DAY Peel and Shear (ASTM D 6392/GRI GM19/D 4437/NSF 54/882 mod.)
TRI Log#: 83006

	TEST REPLICATE NUMBER					
PARAMETER	1	2	3	4	5	MEAN
Sample ID: DS-17 | Weld: Heat Fusion						
Side: A						**Peel A**
Peel Strength (ppi)	99	99	102	95	104	**100**
Peel Incursion (%)	<5	<5	<5	<5	<5	
Peel Locus Of Failure Code	SE	SE	SE	SE	SE	
Peel NSF Failure Code	FTB	FTB	FTB	FTB	FTB	
Side: B						**Peel B**
Peel Strength (ppi)	107	102	99	100	101	**102**
Peel Incursion (%)	<5	<5	<5	<5	<5	
Peel Locus Of Failure Code	SE	SE	SE	SE	SE	
Peel NSF Failure Code	FTB	FTB	FTB	FTB	FTB	
Shear						**Shear**
Shear Strength (ppi)	113	113	111	113	110	**112**
Shear Elongation @ Break (%)	>50	>50	>50	>50	>50	
Sample ID: DS-18 | Weld: Heat Fusion						
Side: A						**Peel A**
Peel Strength (ppi)	100	101	108	100	101	**102**
Peel Incursion (%)	<5	<5	<5	<5	<5	
Peel Locus Of Failure Code	SE	SE	SE	SE	SE	
Peel NSF Failure Code	FTB	FTB	FTB	FTB	FTB	
Side: B						**Peel B**
Peel Strength (ppi)	110	109	100	104	101	**105**
Peel Incursion (%)	<5	<5	<5	<5	<5	
Peel Locus Of Failure Code	SE	SE	SE	SE	SE	
Peel NSF Failure Code	FTB	FTB	FTB	FTB	FTB	
Shear						**Shear**
Shear Strength (ppi)	113	114	115	112	117	**114**
Shear Elongation @ Break (%)	>50	>50	>50	>50	>50	

The testing herein is based upon accepted industry practice as well as the test method listed. Test results reported herein do not apply to samples other than those tested. TRI neither accepts responsibility for nor makes claim as to the final use and purpose of the material. TRI observes and maintains client confidentiality. TRI limits reproduction of this report, except in full, without prior approval of TRI.

DESTRUCTIVE SEAM QUALITY ASSURANCE TEST RESULTS
TRI Client: SCS Engineers (seams)
Project: Ames Ash Pond Closure

Material: 40 mil. LLDPE
SAME DAY Peel and Shear (ASTM D 6392/GRI GM19/D 4437/NSF 54/882 mod.)
TRI Log#: 83006

	TEST REPLICATE NUMBER					
PARAMETER	1	2	3	4	5	MEAN
Sample ID: DS-19 | Weld: Heat Fusion						
Side: A						**Peel A**
Peel Strength (ppi)	104	101	100	102	100	**101**
Peel Incursion (%)	<5	<5	<5	<5	<5	
Peel Locus Of Failure Code	SE	SE	SE	SE	SE	
Peel NSF Failure Code	FTB	FTB	FTB	FTB	FTB	
Side: B						**Peel B**
Peel Strength (ppi)	103	99	99	102	99	**100**
Peel Incursion (%)	<5	<5	<5	<5	<5	
Peel Locus Of Failure Code	SE	SE	SE	SE	SE	
Peel NSF Failure Code	FTB	FTB	FTB	FTB	FTB	
Shear						**Shear**
Shear Strength (ppi)	121	120	118	118	120	**119**
Shear Elongation @ Break (%)	>50	>50	>50	>50	>50	
Sample ID: DS-20 | Weld: Heat Fusion						
Side: A						**Peel A**
Peel Strength (ppi)	99	88	95	97	87	**93**
Peel Incursion (%)	<5	<5	<5	<5	<5	
Peel Locus Of Failure Code	SE	SE	SE	SE	SE	
Peel NSF Failure Code	FTB	FTB	FTB	FTB	FTB	
Side: B						**Peel B**
Peel Strength (ppi)	101	92	92	96	94	**95**
Peel Incursion (%)	<5	<5	<5	<5	<5	
Peel Locus Of Failure Code	SE	SE	SE	SE	SE	
Peel NSF Failure Code	FTB	FTB	FTB	FTB	FTB	
Shear						**Shear**
Shear Strength (ppi)	100	101	101	101	102	**101**
Shear Elongation @ Break (%)	>50	>50	>50	>50	>50	

The testing herein is based upon accepted industry practice as well as the test method listed. Test results reported herein do not apply to samples other than those tested. TRI neither accepts responsibility for nor makes claim as to the final use and purpose of the material. TRI observes and maintains client confidentiality. TRI limits reproduction of this report, except in full, without prior approval of TRI.

DESTRUCTIVE SEAM QUALITY ASSURANCE TEST RESULTS - SINGLE TRACK
TRI Client: SCS Engineers (seams)
Project: Ames Ash Pond Closure

Material: 40 mil. LLDPE
SAME DAY Peel and Shear (ASTM D 6392/GRI GM19/D 4437/NSF 54/882 mod.)
TRI Log#: 83006

	TEST REPLICATE NUMBER					
PARAMETER	1	2	3	4	5	MEAN
Sample ID: DS-21 | Weld: Single Extrusion						
Side: Peel						**Peel**
Peel Strength (ppi)	92	93	93	93	95	**93**
Peel Incursion (%)	<5	<5	<5	<5	<5	
Peel Locus Of Failure Code	SE	SE	SE	SE	SE	
Peel NSF Failure Code	FTB	FTB	FTB	FTB	FTB	
Shear						**Shear**
Shear Strength (ppi)	103	99	97	92	95	**97**
Shear Elongation @ Break (%)	>50	>50	>50	>50	>50	

The testing herein is based upon accepted industry practice as well as the test method listed. Test results reported herein do not apply to samples other than those tested. TRI neither accepts responsibility for nor makes claim as to the final use and purpose of the material. TRI observes and maintains client confidentiality. TRI limits reproduction of this report, except in full, without prior approval of TRI.

Date: 2025-05-29

Mail To:
Matt Kuhlenengel
SCS Engineers (seams)
14755 Grover St
Omaha , Ne , 68144

Bill To:

SCS Engineers (seams)
27219356.02

e-mail:
mkuhlenengel@scsengineers.com ccalhoun@scsengineers.com mstruzl@scsengineers.com
jgarcia@ccawsystems.com

Dear Mr. Kuhlenengel,

Thank you for consulting with TRI/Environmental, Inc. (TRI) for your geosynthetics testing needs. TRI is pleased to submit this final report for laboratory testing.

Project:	**Ames Ash Pond Closure**
TRI Job Reference Number:	**83010**
Material(s) Tested:	(2) Single Extrusion Weld Seam(s)
Test(s) Requested:	SAME DAY Peel and Shear (ASTM D 6392/GRI GM19/D 4437/NSF 54/882 mod.)

Codes:	
AD	Adhesion Failure (100% Peel)
BRK	Break in sheeting away from Seam edge.
SE	Break in sheeting at edge of seam.
AD-BRK	Break in sheeting after some adhesion failure - partial peel.
SIP	Separation in the plane of the sheet (leaving the bond intact).
FTB	Film tearing bond (all non "AD" failures).
NON-FTB	100% peel.

If you have any questions or require any additional information, please call us at 1-800-880-8378.
Sincerely,



Nicole Saucedo

Geosynthetic Services Division
http://www.geosyntheticstestinc.com

The testing herein is based upon accepted industry practice as well as the test method listed. Test results reported herein do not apply to samples other than those tested. TRI neither accepts responsibility for nor makes claim as to the final use and purpose of the material. TRI observes and maintains client confidentiality. TRI limits reproduction of this report, except in full, without prior approval of TRI.

DESTRUCTIVE SEAM QUALITY ASSURANCE TEST RESULTS - SINGLE TRACK
TRI Client: SCS Engineers (seams)
Project: Ames Ash Pond Closure

Material: 40 mil. LLDPE
SAME DAY Peel and Shear (ASTM D 6392/GRI GM19/D 4437/NSF 54/882 mod.)
TRI Log#: 83010

	TEST REPLICATE NUMBER					
PARAMETER	1	2	3	4	5	MEAN
Sample ID: DS-22 | Weld: Single Extrusion						
Side: Peel						**Peel**
Peel Strength (ppi)	83	89	74	80	74	**80**
Peel Incursion (%)	<5	<5	<5	<5	<5	
Peel Locus Of Failure Code	SE	SE	SE	SE	SE	
Peel NSF Failure Code	FTB	FTB	FTB	FTB	FTB	
Shear						**Shear**
Shear Strength (ppi)	99	101	102	102	98	**100**
Shear Elongation @ Break (%)	>50	>50	>50	>50	>50	
Sample ID: DS-23 | Weld: Single Extrusion						
Side: Peel						**Peel**
Peel Strength (ppi)	106	97	89	94	95	**96**
Peel Incursion (%)	<5	<5	<5	<5	<5	
Peel Locus Of Failure Code	SE	SE	SE	SE	SE	
Peel NSF Failure Code	FTB	FTB	FTB	FTB	FTB	
Shear						**Shear**
Shear Strength (ppi)	110	106	101	102	102	**104**
Shear Elongation @ Break (%)	>50	>50	>50	>50	>50	

The testing herein is based upon accepted industry practice as well as the test method listed. Test results reported herein do not apply to samples other than those tested. TRI neither accepts responsibility for nor makes claim as to the final use and purpose of the material. TRI observes and maintains client confidentiality. TRI limits reproduction of this report, except in full, without prior approval of TRI.

Date: 2025-06-02

Mail To:
Matt Kuhlenengel
SCS Engineers (seams)
14755 Grover St
Omaha , Ne , 68144

Bill To:

SCS Engineers (seams)
27219356.02

e-mail:
mkuhlenengel@scsengineers.com ccalhoun@scsengineers.com mstruzl@scsengineers.com jgarcia@ccawsystems.com

Dear Mr. Kuhlenengel,

Thank you for consulting with TRI/Environmental, Inc. (TRI) for your geosynthetics testing needs. TRI is pleased to submit this final report for laboratory testing.

Project:	**Ames Ash Pond Closure**
TRI Job Reference Number:	**83040**
Material(s) Tested:	(1) Heat Fusion Weld Seam(s)
Test(s) Requested:	SAME DAY Peel and Shear (ASTM D 6392/GRI GM19/D 4437/NSF 54/882 mod.)

Codes:	
AD	Adhesion Failure (100% Peel)
BRK	Break in sheeting away from Seam edge.
SE	Break in sheeting at edge of seam.
AD-BRK	Break in sheeting after some adhesion failure - partial peel.
SIP	Separation in the plane of the sheet (leaving the bond intact).
FTB	Film tearing bond (all non "AD" failures).
NON-FTB	100% peel.

If you have any questions or require any additional information, please call us at 1-800-880-8378.
Sincerely,
sigfile
geolab

Geosynthetic Services Division
http://www.geosyntheticstestinc.com

The testing herein is based upon accepted industry practice as well as the test method listed. Test results reported herein do not apply to samples other than those tested. TRI neither accepts responsibility for nor makes claim as to the final use and purpose of the material. TRI observes and maintains client confidentiality. TRI limits reproduction of this report, except in full, without prior approval of TRI.

DESTRUCTIVE SEAM QUALITY ASSURANCE TEST RESULTS
TRI Client: SCS Engineers (seams)
Project: Ames Ash Pond Closure

Material: 40 mil. LLDPE
SAME DAY Peel and Shear (ASTM D 6392/GRI GM19/D 4437/NSF 54/882 mod.)
TRI Log#: 83040

	TEST REPLICATE NUMBER					
PARAMETER	1	2	3	4	5	MEAN
Sample ID: DS-24 | Weld: Heat Fusion						
Side: A						**Peel A**
Peel Strength (ppi)	92	85	90	90	90	**89**
Peel Incursion (%)	<5	<5	<5	<5	<5	
Peel Locus Of Failure Code	SE	SE	SE	SE	SE	
Peel NSF Failure Code	FTB	FTB	FTB	FTB	FTB	
Side: B						**Peel B**
Peel Strength (ppi)	79	85	88	82	92	**85**
Peel Incursion (%)	<5	<5	<5	<5	<5	
Peel Locus Of Failure Code	SE	SE	SE	SE	SE	
Peel NSF Failure Code	FTB	FTB	FTB	FTB	FTB	
Shear						**Shear**
Shear Strength (ppi)	87	93	85	89	87	**88**
Shear Elongation @ Break (%)	>50	>50	>50	>50	>50	

The testing herein is based upon accepted industry practice as well as the test method listed. Test results reported herein do not apply to samples other than those tested. TRI neither accepts responsibility for nor makes claim as to the final use and purpose of the material. TRI observes and maintains client confidentiality. TRI limits reproduction of this report, except in full, without prior approval of TRI.

I.13 – Tensiometer Calibration Certificate

Demtech Services, Inc.

Placerville, California, USA

CALIBRATION CERTIFICATE

Tensiometer Model: Pro-Tester T-0100

Device Calibrated: S-Type load cell

Range: 0 - 750 lbs. Tension

Model No: M2405-750#

Serial No: **40700**

Calibration Apparatus:

Pro-Cal unit, model TC-0100/A

A/D Module Model No: T-029

A/D Module Serial No: **1418040700**

Channel No: N/A

Dead Weight:

W1	2
W2	152
W3	302

Reference Cell:

R1	2
R2	152
R3	302

Indicator reading with no load: 0

Offset: **-4.432137**

Scale: **3.325918**

Applied Force lbs.	Cell Response:	Deviation Error:
2	2	0.00
52	52	0.00
102	102	0.00
152	152	0.00
202	202	0.00
252	252	0.00
302	302	0.00

Total Deviation Error (%): 0.00%

Temperature at time of calibration: 73 degrees F

Exitation Voltage: 5 V DC

This calibration conforms to the standards set by ASTM E4 and is traceable to NIST standards

Note: A/D Module and load cell above have been systems calibrated and are considered a matched pair. In general, calibrated A/D Modules and load cells are not interchangeable.

Calibration Technician: Chris Lenaghan

Date: 05/19/25

Signature:

Demtech Services, Inc.

Placerville, California, USA

CALIBRATION CERTIFICATE

Tensiometer Model: Pro-Tester T-0100

Device Calibrated: S-Type load cell
Range: 0 - 750 lbs. Tension

Calibration Apparatus:
Pro-Cal unit, model TC-0100/A

Model No:	XTS2-750#
Serial No:	**1529**
A/D Module Model No:	T-029
A/D Module Serial No:	**4914001529**
Channel No:	N/A

Dead Weight:

W1	2
W2	152
W3	302

Reference Cell:

R1	2
R2	152
R3	302

Indicator reading with no load: 0

Offset: **-5.152411** Scale: **3.322580**

Applied Force lbs.	Cell Response:	Deviation Error:
2	2	0.00
52	52	0.00
102	102	0.00
152	152	0.00
202	202	0.00
252	252	0.00
302	302	0.00

Total Deviation Error (%): 0.00%

Temperature at time of calibration: 73 degrees F
Exitation Voltage: 5 V DC

This calibration conforms to the standards set by ASTM E4 and is traceable to NIST standards

Note: A/D Module and load cell above have been systems calibrated and are considered a matched pair. In general, calibrated A/D Modules and load cells are not interchangeable.

Technician: Chris Lenaghan Date: 05/19/25
Signature:

Appendix J

Geosynthetic Installer Documentation and Warranty

clean air and water systems, llc

"You create it, we'll contain it"

Ames Ash Pond Closure

SUBMITTAL PACKAGE TABLE OF CONTENTS

SECTION - 32 23 40 - GEOMEMBRANE

ITEM # - SPEC I.D.	SUBMITTAL DESCRIPTION	DATE SUBMITTED AND/OR WHEN AVAILABLE	CLARIFICATIONS
1.4.A	Product Data Sheet	Approved	
1.4.B	Manufacturer Profile	Approved	
1.4.B	Installer Qualifications	Approved	
1.4.B	Manufacturer Quality Control Manual	Approved	
1.4.B	Installation Manual	Approved	
1.4.B	Material Roll Certifications	Approved	
1.4.B	Proposed Panel Layout	Approved	
1.4.B	Crew Resume	Approved	
1.4.B	Warranties	**Final Install - 6/4/25**, Material to Follow	
1.4.B	Closeout Paperwork	**6/4/2025**	

Submitted By: **Luke Krabel**
Email: lkrabel@caawsystems.com
Office Phone: **(402) 414-4558**
Cell Phone: **(402) 981-2504**

Signed: Luke D Krabel

Submittal Cover Sheet

SECTION - 32 23 40 - GEOMEMBRANE

ITEM # - SPEC I.D.

1.4.B

SUBMITTAL DESCRIPTION

Warranties

DATE SUBMITTED AND/OR WHEN AVAILABLE

Final Install - 6/4/25, Material to Follow

1 Year Install Warranty

PROJECT NAME: Ames Ash Pond Closure Construction 2025

Subject to the terms and conditions set forth below, Clean Air And Water Systems, LLC warrants to Purchaser, City of Ames, Iowa , that the 40 mil LLDPE and geocomposite installed at the above referenced project, was installed by Clean Air And Water Systems, LLC, in accordance with specifications in a good and workmanlike manner and that the installation of the liner is free from defects in workmanship for a period of one (1) year from the date upon which the material was installed, starting date 5/31/25.

This warranty covers only defects in workmanship occurring during the installation of the liner. This warranty does not cover any damage to, or defects in the liner found to have been a result of misuse, abuse or conditions existing after it was installed, including, but not limited to, rough handling; malicious mischief; vandalism; sabotage; fire; acts of God; acts of the public enemy; acts of war, public rebellion, severe weather conditions of all types; damage due to ice; excessive stress from any source; floating debris; damage due to machinery; foreign objects or animals. Nor does this warranty cover any defects which are found to have been a result of improper or defective design or engineering unless the design or engineering was performed by Clean Air And Water Systems, LLC. In the event circumstances are found to exist which purchaser believes may give rise to a claim under this warranty, the following procedure shall be followed:

a) Purchaser shall give Clean Air And Water Systems, LLC written notice of the facts and circumstances of said claim within ten (10) days of becoming aware of said facts and circumstances. Said notice shall be by registered or certified mail, return receipt requested, postage prepaid, addressed to Member, Clean Air And Water Systems, 1323 Poplar Dr. Waukesha, Wisconsin 53188. The words "WARRANTY CLAIM" shall be clearly marked on the face of envelope in the lower right-hand corner. Said notice shall contain, at a minimum, the name and address of the owner, the name and address of the installation, the name and address of the installer, the date upon which the material was purchased, and the facts known to Purchaser upon which the claim is based. Failure to strictly comply with all the requirements of this paragraph shall void this warranty.

b) Within twenty days after receipt of the notice described in paragraph a., above, Clean Air And Water Systems, LLC shall notify Purchaser either that it will send a representative to inspect the allegedly defective liner or that it does not wish to do so. Purchaser shall pay the expenses incurred by Clean Air And Water Systems, LLC in making the inspection, including current per diem rates for personnel involved in making the inspection, in the event Clean Air And Water Systems, LLC determines that the claim is not covered by this warranty.

c) Purchaser SHALL NOT REPAIR, REPLACE, REMOVE, ALTER, OR DISTURB ANY LINER, NOR SHALL Purchaser ALLOW ANYONE ELSE TO REPAIR, REPLACE, REMOVE, ALTER, OR DISTURB ANY LINER PRIOR TO SUCH INSPECTION OR RECEIPT OF CLEAN AIR AND WATER SYSTEMS, LLC.'S NOTICE THAT IT ELECTS NOT TO INSPECT. A FAILURE TO STRICTLY COMPLY WITH THIS PARAGRAPH SHALL VOID THIS WARRANTY OR MAY LEAD TO A DETERMINATION THAT THE ALLEGED DEFECTS ARE NOT WITHIN THE SCOPE OF THIS WARRANTY.

d) If Clean Air And Water Systems, LLC determines that the alleged defects are covered by this warranty, Clean Air And Water Systems, LLC shall, in its sole discretion, either repair the defective liner or provide Purchaser with replacement liner. THE REMEDIES PROVIDED HEREIN ARE THE EXCLUSIVE REMEDIES AVAILABLE UNDER THIS WARRANTY. Any determination as to whether a particular defect is covered by this warranty will be made by Clean Air And Water Systems, LLC in its sole and complete discretion.

e) Purchaser agrees that it shall provide Clean Air And Water Systems, LLC with clean, dry and unobstructed access to the liner in order for Clean Air And Water Systems, LLC to perform the inspections and warranty work which may be required pursuant to this warranty.

THE REMEDIES PROVIDED TO Purchaser HEREIN ARE THE EXCLUSIVE REMEDIES AVAILABLE UNDER THIS WARRANTY AND ARE INTENDED FOR THE SOLE BENEFIT OF Purchaser. NEITHER THIS WARRANTY NOR ANY RIGHTS HEREUNDER SHALL BE ASSIGNABLE. CLEAN AIR AND WATER SYSTEMS, LLC SHALL HAVE NO LIABILITY UNDER THIS WARRANTY TO THIRD PARTIES OR STRANGERS TO THIS AGREEMENT. THE WARRANTY SET FORTH ABOVE IS THE ONLY WARRANTY APPLICABLE TO THE LINER AND ALL OTHER WARRANTIES, EXPRESSED OR IMPLIED, INCLUDING, BUT NOT LIMITED TO, ANY WARRANTY OF MERCHANTABILITY OR FITNESS FOR A PARTICULAR PURPOSE ARE DISCLAIMED. IN NO EVENT SHALL CLEAN AIR AND WATER SYSTEMS, LLC BE LIABLE FOR ANY DIRECT, INDIRECT, INCIDENTAL, SPECIAL OR CONSEQUENTIAL DAMAGES FOR, RESULTING FROM, OR IN CONNECTION WITH, ANY LOSS RESULTING FROM THE USE OF THE LINER. IN THE EVENT THE EXCLUSIVE REMEDY PROVIDED HEREIN FAILS IN ITS ESSENTIAL PURPOSE, AND IN THAT EVENT ONLY, Purchaser SHALL BE ENTITLED TO RETURN OF THE PURCHASE PRICE FOR SO MUCH OF THE MATERIAL AS CLEAN AIR AND WATER SYSTEMS, LLC DETERMINES IN ITS SOLE DISCRETION, TO HAVE VIOLATED THE WARRANTY PROVIDED HEREIN. EXCEPT FOR THE WARRANTY SET FORTH ABOVE, NO REPRESENTATION OR WARRANTY MADE BY ANY SALES OR OTHER REPRESENTATIVE CLEAN AIR AND WATER SYSTEMS, LLC, OR ANY OTHER PERSON, CONCERNING THE LINER SHALL BE BINDING UPON CLEAN AIR AND WATER SYSTEMS, LLC.

Any waiver of the terms and conditions of this warranty shall be in writing signed by CLEAN AIR AND WATER SYSTEMS, LLC the failure to insist upon strict compliance with any of the terms and conditions contained herein shall not act as a waiver of strict compliance with all of the remaining terms and conditions or this warranty and shall not operate as a waiver as to any of the terms and conditions of this warranty as to future claims under this warranty.

Submittal Cover Sheet

SECTION - 32 23 40 - GEOMEMBRANE

ITEM # - SPEC I.D.

1.4.B

SUBMITTAL DESCRIPTION

Closeout Paperwork

DATE SUBMITTED AND/OR WHEN AVAILABLE

6/4/2025

NORTH

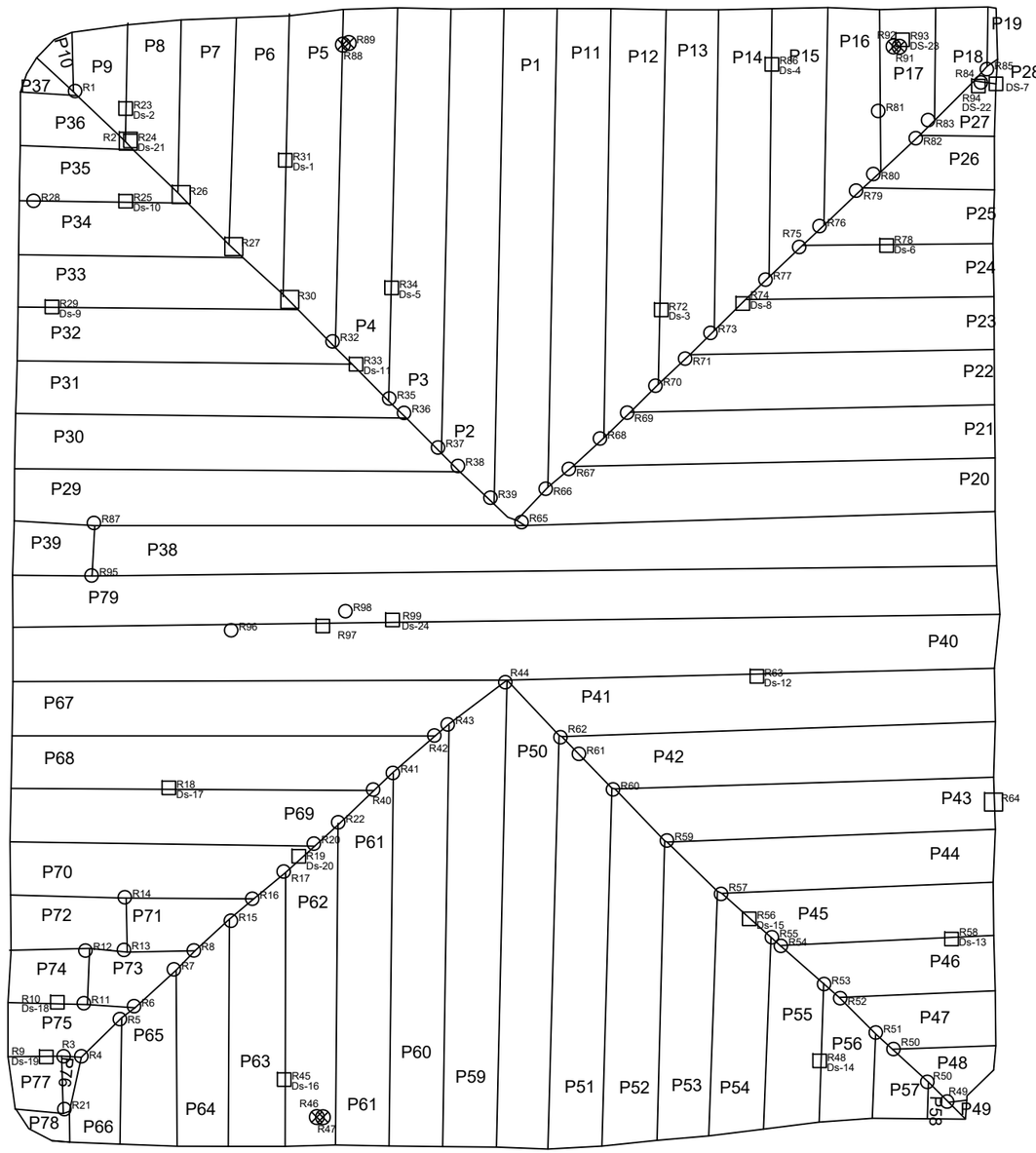

LEGEND

○ R##	REPAIR - PATCH
□ DS#	DESTRUCTIVE TEST
P###	PANEL NUMBER
□ R##	REPAIR - CAP
⊗	PIPE BOOT
———	PANEL EDGE / FIELD SEAM

SCALE

0 30 60

DRAWN BY					
H.A.					
SCALE					
1" = 60'					
DATE					
6/4/25					
	#	REVISIONS	DATE		

clean air and water systems
WWW.CAAWSYSTEMS.COM
1323 POPLAR DRIVE
WAUKESHA, WI 53188
262-965-4366

PROJECT NAME:
AMES ASH POND CLOSURE CONSTRUCTION 2025

DRAWING NAME:
FINAL GEOMEMBRANE LINER ASBUILT DRAWING

LOCATION:
AMES, IOWA

DRAWING NUMBER:AB-1

JOB#:

FILENAME:AMES ASH

clean air and water systems

Clean Air & Water Systems Quality Control (QC) Data

Project Name:	Ames Ash Pond Closure
Project Number:	24048
Location:	Ames, Iowa
QC Monitor:	Humberto Avila
Material:	40 mil LLDPE

**** All Locations Presented in Feet (US) using US State Plane Coordinate System

Datum: NAD 1983 (2011)

Geoid: GEOID18 (Conus)

clean air and water systems

Trial Weld Testing Summary

Project Name: Ames Ash Pond Closure

Project Number: 24048

QC Monitor: Humberto Avila

Material: 40 mil LLDPE

Sample TW#	Date	Ambient Temp	Time (AM/PM)	Seamer/ Machine#	Machine Temp/ Speed/ Preheat	Peel (ppi) Inside					Peel (ppi) Outside					Shear (ppi) Outside					Result	Comments
1	5/23/2025	68	1:20 PM	6416	860/7.00	83	80	83			82	74	80			90	82	88			P	Smoth /smoth
2	5/23/2025	66	1:20 PM	6421	860/6.00	83	78	72			78	81	77			88	85	88			P	Smooth smooth
3	5/23/2025	69	4:14 PM	Jv6416	860/5.00	89	87	92			81	87	78			98	104	97			P	Texture texture
4	5/23/2025	69	4:25 PM	J0v/6421	860/5.50	78	77	71			82	82	78			99	92	91			P	T/T
5	5/24/2025	55	7:08 AM	Jov6421	860/5.00	103	93	100			106	100	96			118	117	128			P	Ss
6	5/24/2025	55	8:16 AM	Jv6416	860/5.00	83	83	88			96	98	99			108	112	116			P	S/s
7	5/24/2025	55	8:20 AM	Jv6416	860/4.00	85	79	85			83	83	85			101	103	93			P	T/T
8	5/24/2025	65	1:22 PM	Jv6416	860/5.00	80	85	77			88	83	81			90	93	92			P	T/T
9	5/24/2025	65	1:35 PM	Jov6421	860/6.50	92	91	97			91	99	90			109	103	104			P	Ss
10	5/24/2025	65	1:41 PM	Jv6416	860/6.00	74	77	77			81	83	77			98	96	100			P	Ss
11	5/24/2025	65	1:44 PM	Jov6421	860/5.00	94	88	84			90	84	76			101	93	95			P	Texture texture
12	5/25/2025	57	6:32 AM	Jv6416	860/6.00	83	78	100			91	98	91			117	111	115			P	Ss
13	5/25/2025	57	6:44 AM	Jov6421	860/5.00	104	93	100			76	86	83			123	102	116			P	Ss
14	5/25/2025	57	6:51 AM	Jv6416	860/4.00	75	91	84			83	61	77			100	99	97			P	Texture texture
15	5/27/2025	55	6:49 AM	Js7541	500/500	102	97	89								103	101	104			P	T.T
16	5/27/2025	56	7:18 AM	Jov7542	550/550	84	92	91								92	92	98			P	T.T
17	5/28/2025	55	6:49 AM	JG/076	550/500	56	81	57								89	110	99			P	E/weld
18	5/28/2025	55	6:04 AM	JV/7542	550/480	83	96	78								95	88	90			P	E/weld
19	5/28/2025	55	6:48 AM	JS/7541	500/500	80	100	94								106	100	94			P	E/WELD
20	5/28/2025	62	1:29 PM	Jv7542	550/380	91	63	79								104	75	78			P	e/WELD
21	5/31/2025	76	10:45 AM	Jov6421	860/700	70	70	78			73	71	66			82	86	80			P	S/S
22	5/31/2025	76	10:54 AM	Jv6416	860/600	84	89	75			73	71	72			71	77	71			P	Ss
23	5/31/2025	76	11:17 AM	Jv6416	860/500	70	75	72			76	75	77			81	84	84			P	Tt
24	5/31/2025	76	11:30 AM	Jv6416	860/600	70	69	70			68	69	68			71	72	74			P	S.T
25	5/31/2025	83	1:43 PM	Jv/7542	500/380	65	66	81								90	87	81			P	Ex/Weld

clean air and water systems

Panel Placement Summary

Project Name: Ames Ash Pond Closure

Project Number: 24048

QC Monitor: Humberto Avila

Material: 40 mil LLDPE

Panel Number	Date	Roll Number	Type S or T	Final Width (Feet)	Final Length (Feet)	Final Area (Sq. Ft.)	Comments
P1	5/23/2025	476	Texture	22.5	220	4,950	
P2	5/23/2025	476	Texture	22.5	220	4,950	
P3	5/23/2025	476	Texture	22.5	170	3,825	
P4	5/23/2025	467	Texture	22.5	149	3,353	
P5	5/23/2025	467	Texture	22.5	128	2,880	
P6	5/23/2025	467	Texture	22.5	102	2,295	
P7	5/23/2025	467	Texture	22.5	77	1,733	
P8	5/23/2025	467	Texture	22.5	58	1,305	
P9	5/23/2025	467	Texture	22.5	58	1,305	
P10	5/23/2025	467	Texture	22.5	33	743	
P11	5/23/2025	469	Texture	22.5	205	4,613	
P12	5/23/2025	467	Texture	22.5	182	4,095	
P13	5/23/2025	469	Texture	22.5	165	3,713	
P14	5/23/2025	469	Texture	22.5	136	3,060	
P15	5/23/2025	471	Texture	22.5	114	2,565	
P16	5/23/2025	471	Texture	22.5	88	1,980	
P17	5/23/2025	471	Texture	22.5	69	1,553	
P18	5/23/2025	471	Texture	22.5	47	1,058	
P19	5/23/2025	471	Texture	8	27	216	

clean air and water systems

Panel Placement Summary

Project Name: Ames Ash Pond Closure

Project Number: 24048

QC Monitor: Humberto Avila

Material: 40 mil LLDPE

Panel Number	Date	Roll Number	Type S or T	Final Width (Feet)	Final Length (Feet)	Final Area (Sq. Ft.)	Comments
P20	5/23/2025	471	Texture	22.5	188	4,230	
P21	5/23/2025	477	Texture	22.5	188	4,230	
P22	5/23/2025	477	Texture	22.5	157	3,533	
P23	5/23/2025	471	Texture	22.5	130	2,925	
P24	5/23/2025	477	Texture	22.5	110	2,475	
P25	5/23/2025	477	Texture	22.5	86	1,935	
P26	5/23/2025	477	Texture	22.5	60	1,350	
P27	5/23/2025	477	Texture	22.5	38	855	
P28	5/23/2025	477	Texture	10	18	180	
P29	5/24/2025	468	Texture	22.5	212	4,770	
P30	5/24/2025	468	Texture	22.5	188	4,230	
P31	5/24/2025	468	Texture	22.5	166	3,735	
P32	5/24/2025	468	Texture	22.5	135	3,038	
P33	5/24/2025	475	Texture	22.5	115	2,588	
P34	5/24/2025	475	Texture	22.5	94	2,115	
P35	5/24/2025	475	Texture	22.5	75	1,688	
P36	5/24/2025	475	Texture	22.5	52	1,170	
P37	5/24/2025	476	Texture	15	30	450	
P38	5/24/2025	475	Texture	22.5	375	8,438	

clean air and water systems

Panel Placement Summary

Project Name: Ames Ash Pond Closure

Project Number: 24048

QC Monitor: Humberto Avila

Material: 40 mil LLDPE

Panel Number	Date	Roll Number	Type S or T	Final Width (Feet)	Final Length (Feet)	Final Area (Sq. Ft.)	Comments
P39	5/24/2025	477	Texture	22.5	39	878	
P40	5/24/2025	470	Texture	22.5	378	8,505	
P41	5/24/2025	470	Texture	22.5	192	4,320	
P42	5/24/2025	465	Texture	22.5	180	4,050	
P43	5/24/2025	465	Texture	22.5	154	3,465	
P44	5/24/2025	465	Texture	22.5	134	3,015	
P45	5/24/2025	465	Texture	22.5	118	2,655	
P46	5/24/2025	465	Texture	22.5	92	2,070	
P47	5/24/2025	472	Texture	22.5	65	1,463	
P48	5/24/2025	472	Texture	22.5	46	1,035	
P49	5/24/2025	472	Texture	10	12	120	
P50	5/24/2025	472	Texture	22.5	183	4,118	
P51	5/24/2025	472	Texture	22.5	172	3,870	
P52	5/24/2025	472	Texture	22.5	150	3,375	
P53	5/24/2025	466	Texture	22.5	132	2,970	
P54	5/24/2025	472	Texture	22.5	111	2,498	
P55	5/24/2025	466	Texture	22.5	85	1,913	
P56	5/24/2025	466	Texture	22.5	65	1,463	
P57	5/24/2025	466	Texture	22.5	43	968	

clean air and water systems

Panel Placement Summary

Project Name: Ames Ash Pond Closure

Project Number: 24048

QC Monitor: Humberto Avila

Material: 40 mil LLDPE

Panel Number	Date	Roll Number	Type S or T	Final Width (Feet)	Final Length (Feet)	Final Area (Sq. Ft.)	Comments
P58	5/25/2025	466	Texture	22.5	23	518	
P59	5/25/2025	466	Texture	22.5	188	4,230	
P60	5/25/2025	466	Texture	22.5	171	3,848	
P61	5/25/2025	474	Texture	22.5	152	3,420	
P62	5/25/2025	474	Texture	22.5	120	2,700	
P63	5/25/2025	474	Texture	22.5	138	3,105	
P64	5/25/2025	474	Texture	22.5	97	2,183	
P65	5/25/2025	474	Texture	22.5	75	1,688	
P66	5/25/2025	474	Texture	22.5	56	1,260	
P67	5/25/2025	473	Texture	22.5	204	4,590	
P68	5/25/2025	467	Texture	22.5	180	4,050	
P69	5/25/2025	473	Texture	22.5	154	3,465	
P70	5/25/2025	573	Texture	22.5	134	3,015	
P71	5/25/2025	473	Texture	22.5	56	1,260	
P72	5/25/2025	474	Texture	22.5	52	1,170	
P73	5/25/2025	477	Texture	22.5	47	1,058	
P74	5/25/2025	469	Texture	22.5	38	855	
P75	5/25/2025	468	Texture	22.5	59	1,328	
P76	5/25/2025	468	Texture	22.5	10	225	

clean air and water systems

Panel Placement Summary

Project Name: Ames Ash Pond Closure

QC Monitor: Humberto Avila

Project Number: 24048

Material: 40 mil LLDPE

Panel Number	Date	Roll Number	Type S or T	Final Width (Feet)	Final Length (Feet)	Final Area (Sq. Ft.)	Comments
P77	5/25/2025	473	Texture	22.5	26	585	
P78	5/25/2025	460	Texture	22.5	29	653	
P79	5/31/2025	6930	Texture	22.5	398	8,955	

clean air and water systems

Panel Seaming Summary

Project Name: Ames Ash Pond Closure
QC Monitor: Humberto Avila
Project Number: 24048
Material: 40 mil LLDPE

Seam Number	Date Seamed	Final Seam Length (feet)	Welder/Machine Number	Weld Type Ext / Wedge	Machine Temp/ Speed/ Preheat	Time		Comments
						Start	Stop	
P1/11	5/23/2025	205	Jov6421	Wedge	860/6	2:58 PM	3:18 PM	Smooth smooth
P1/2	5/23/2025	220	JV6416	Wedge	860/7	1:33 PM	1:53 PM	Smooth smooth
P1/20	5/23/2025	16	Jv6416	Wedge	860/5	6:58 PM	7:00 PM	Texture texture
P11/12	5/23/2025	182	Jv6416	Wedge	860/7	3:04 PM	3:21 PM	Smooth smooth
P11/20	5/23/2025	12	Jv6416	Wedge	860/5	6:54 PM	6:58 PM	Texture texture
P11/21	5/23/2025	17	Jv6416	Wedge	860/5	6:53 PM	6:56 PM	Texture texture
P12/13	5/23/2025	165	Jov6421	Wedge	860/7	3:24 PM	3:40 PM	Smooth smooth
P12/21	5/23/2025	14	Jv6416	Wedge	860/5	6:51 PM	6:53 PM	Texture texture
P12/22	5/23/2025	15	Jv6416	Wedge	860/5	6:49 PM	6:51 PM	Texture texture
P13/14	5/23/2025	136	Jv6416	Wedge	860/7	3:27 PM	3:39 PM	Smooth smooth
P13/22	5/23/2025	16	Jv6416	Wedge	860/5	6:46 PM	6:49 PM	Texture texture
P13/23	5/23/2025	14	Jv6416	Wedge	860/5	6:44 PM	6:46 PM	Texture texture
P14/15	5/23/2025	114	Jov6421	Wedge	860/6	3:44 PM	3:52 PM	Smooth smooth
P14/23	5/23/2025	17	Jv6416	Wedge	860/5	6:42 PM	6:44 PM	Texture texture
P14/24	5/23/2025	13	Jv6416	Wedge	860/5	6:40 PM	6:42 PM	Texture texture
P15/16	5/23/2025	88	Jv6416	Wedge	860/7	3:49 PM	3:58 PM	Smooth smooth
P15/24	5/23/2025	19	Jv6416	Wedge	860/5	6:37 PM	6:40 PM	Texture texture
P15/25	5/23/2025	11	Jv6416	Wedge	860/5	6:36 PM	6:37 PM	Texture texture

clean air and water systems

Panel Seaming Summary

Project Name: Ames Ash Pond Closure
QC Monitor: Humberto Avila
Project Number: 24048
Material: 40 mil LLDPE

Seam Number	Date Seamed	Final Seam Length (feet)	Welder/Machine Number	Weld Type Ext / Wedge	Machine Temp/ Speed/ Preheat	Time		Comments
						Start	Stop	
P16/17	5/23/2025	23	Jov6421	Wedge	860/6	3:58 PM	4:02 PM	Smooth smooth not entire seam
P16/17	5/23/2025	46	Jov6421	Wedge	860/6	4:02 PM	4:05 PM	Smooth smooth not entire seam
P16/25	5/23/2025	19	Jv6416	Wedge	860/5	6:33 PM	6:36 PM	Texture texture
P16/26	5/23/2025	9	Jv6416	Wedge	860/5	6:31 PM	6:33 PM	Texture texture
P17/18	5/23/2025	47	Jv6416	Wedge	860/7	4:04 PM	4:09 PM	Smooth smooth
P17/26	5/23/2025	21	Jv6414	Wedge	860/5	6:28 PM	6:31 PM	Texture texture
P17/27	5/23/2025	8	Jv6416	Wedge	860/5	6:27 PM	6:28 PM	Texture texture
P18/19	5/23/2025	27	Jov6421	Wedge	860/6	4:12 PM	4:16 PM	Smooth smooth
P18/27	5/23/2025	23	Jv6116	Wedge	860/5	6:24 PM	6:27 PM	Texture texture
P18/28	5/23/2025	8	Jv6416	Wedge	860/5	6:22 PM	6:24 PM	Texture texture
P19/28	5/23/2025	10	Jv6416	Wedge	860/5	6:22 PM	6:22 PM	Texture texture
P2/3	5/23/2025	194	Jov6421	Wedge	860/6	1:39 PM	1:58 PM	Smooth smooth
P20/21	5/23/2025	188	Jov6421	Wedge	860/6	5:10 PM	5:27 PM	Smooth smoot
P21/22	5/23/2025	157	Jv6416	Wedge	810/7	5:16 PM	5:31 PM	Smooth smooth
P22/23	5/23/2025	130	Jov6421	Wedge	860/6	5:31 PM	5:45 PM	Smooth smooth
P23/24	5/23/2025	110	Jv6416	Wedge	869/7	5:38 PM	5:45 PM	Smooth smooth
P24/25	5/23/2025	86	Jov6421	Wedge	860/6	5:49 PM	3:56 PM	Smooth smooth

clean air and water systems

Panel Seaming Summary

Project Name: Ames Ash Pond Closure
QC Monitor: Humberto Avila
Project Number: 24048
Material: 40 mil LLDPE

Seam Number	Date Seamed	Final Seam Length (feet)	Welder/Machine Number	Weld Type Ext / Wedge	Machine Temp/ Speed/ Preheat	Time		Comments
						Start	Stop	
P25/26	5/23/2025	60	Jv6416	Wedge	860/7	5:53 PM	5:59 PM	Smooth smooth
P26/27	5/23/2025	38	Jov6421	Wedge	860/6	6:00 PM	6:04 PM	Smooth smooth
P27/28	5/23/2025	18	Jv6416	Wedge	860/7	6:02 PM	6:09 PM	Smooth smooth
P3/4	5/23/2025	170	Jv6416	Wedge	860/7	2:00 PM	2:16 PM	S/S
P4/5	5/23/2025	131	Jov6421	Wedge	860/6	2:04 PM	2:16 PM	Not entire seam
P4/5	5/23/2025	18	Jov6421	Wedge	860/6	2:16 PM	2:18 PM	Not entire seam
P5/6	5/23/2025	128	Jov6421	Wedge	860/6	2:23 PM	2:35 PM	Smooth smooth
P6/7	5/23/2025	102	Jv6416	Wedge	860/7	2:21 PM	2:30 PM	Smooth smooth
P7/8	5/23/2025	77	Jv6416	Wedge	860/7	2:33 PM	2:39 PM	Smooth smooth
P8/9	5/23/2025	58	Jov6421	Wedge	860/6	2:38 PM	2:44 PM	Smooth smooth
P9/10	5/23/2025	33	Jv6416	Wedge	860/7	2:40 PM	2:33 PM	Smooth smooth
P1/29	5/24/2025	11	Jv6416	Wedge	860/4	9:12 AM	9:13 AM	Texture texture
P10/37	5/24/2025	24	Jv6416	Wedge	860/5	9:55 AM	9:58 AM	Texture texture
P2/29	5/24/2025	19	Jv6416	Wedge	860/4	9:13 AM	9:16 AM	Texture texture
P2/30	5/24/2025	9	Jv6416	Wedge	860/4	9:16 AM	9:19 AM	Texture texture
P20/29	5/24/2025	4	Jv6416	Wedge	860/4	9:12 AM	9:12 AM	Texture texture
P20/38	5/24/2025	190	Jov6421	Wedge	860/5	9:54 AM	10:18 AM	Ss

clean air and water systems

Panel Seaming Summary

Project Name: Ames Ash Pond Closure
QC Monitor: Humberto Avila
Project Number: 24048
Material: 40 mil LLDPE

Seam Number	Date Seamed	Final Seam Length (feet)	Welder/Machine Number	Weld Type Ext / Wedge	Machine Temp/ Speed/ Preheat	Time		Comments
						Start	Stop	
P29/30	5/24/2025	186	Jov6421	Wedge	860/5	7:16 AM	7:42 AM	Ss
P29/38	5/24/2025	173	Jov6421	Wedge	860/5	10:18 AM	10:40 AM	Ss
P29/3p	5/24/2025	37	Jov6421	Wedge	860/5	10:40 AM	10:45 AM	Ss
P3/30	5/24/2025	19	Jv6416	Wedge	860/4	9:19 AM	9:22 AM	Texture texture
P3/31	5/24/2025	9	Jv6416	Wedge	860/4	9:22 AM	9:24 AM	Texture texture
P30/31	5/24/2025	164	Jov6421	Wedge	860/5	7:45 AM	8:07 AM	Ss
P31/32	5/24/2025	133	Jov6421	Wedge	860/5	8:10 AM	8:27 AM	Ss
P32/33	5/24/2025	113	Jv6421	Wedge	860/5	8:27 AM	8:42 AM	Ss
P33/34	5/24/2025	92	Jov6421	Wedge	860/5	8:29 AM	8:42 AM	Ss
P34/35	5/24/2025	12	Jov6421	Wedge	860/5	8:44 AM	8:45 AM	Ss not entire seam
P34/35	5/24/2025	62	Jov6421	Wedge	860/5	8:45 AM	8:54 AM	Ss not entire seam
P35/36	5/24/2025	50	Jv6416	Wedge	860/5	8:46 AM	8:53 AM	S/S
P36/37	5/24/2025	30	Jv6416	Wedge	860/5	8:56 AM	8:58 AM	S/S
P38/39	5/24/2025	22	Jv6416	Wedge	860/4	10:03 AM	10:09 AM	Texture texture
P4/31	5/24/2025	21	Jv6416	Wedge	860/4	9:24 AM	9:27 AM	Texture texture
P4/32	5/24/2025	8	Jv6416	Wedge	860/4	9:27 AM	9:29 AM	Texture texture
P40/41	5/24/2025	190	Jv6416	Wedge	860/5	11:03 AM	11:28 AM	Ss

clean air and water systems

Panel Seaming Summary

Project Name: Ames Ash Pond Closure
QC Monitor: Humberto Avila
Project Number: 24048
Material: 40 mil LLDPE

Seam Number	Date Seamed	Final Seam Length (feet)	Welder/Machine Number	Weld Type Ext / Wedge	Machine Temp/ Speed/ Preheat	Time		Comments
						Start	Stop	
P41/42	5/24/2025	180	Jov6421	Wedge	860/5	11:14 AM	11:32 AM	Ss
P41/50	5/24/2025	30	Jv6416	Wedge	860/5	4:13 PM	4:17 PM	Texture texture
P42/43	5/24/2025	154	Jv6416	Wedge	860/5	11:32 AM	11:56 AM	Ss
P42/51	5/24/2025	19	Jv6416	Wedge	860/5	4:09 PM	4:12 PM	Texture texture not entire seam
P42/51	5/24/2025	8	Jv6416	Wedge	860/5	4:12 PM	4:13 PM	Texture texture not entire seam
P43/44	5/24/2025	131	Jov6421	Wedge	860/5	11:38 AM	11:55 AM	Se
P43/52	5/24/2025	28	Jv6416	Wedge	860/5	4:04 PM	4:09 PM	Texture texture
P44/45	5/24/2025	116	J 6416	Wedge	860/5	11:52 AM	12:05 PM	Ss
P44/53	5/24/2025	26	Jv6416	Wedge	860/5	4:00 PM	4:04 PM	Texture texture
P45/46	5/24/2025	89	Jov6421	Wedge	860/5	1:41 PM	1:52 PM	Ss
P45/54	5/24/2025	26	Jv6416	Wedge	860/5	3:50 PM	4:00 PM	Texture texture
P45/55	5/24/2025	5	Jv6416	Wedge	860/5	3:50 PM	3:50 PM	Texture texture
P45/55	5/24/2025	22	Jv6416	Wedge	860/5	3:53 PM	3:56 PM	Texture texture
P46/47	5/24/2025	65	Jv6416	Wedge	860/6	1:42 PM	1:50 PM	S/S
P46/56	5/24/2025	9	Jv6416	Wedge	860/5	3:52 PM	3:53 PM	Texture texture
P47/48	5/24/2025	46	Jv6416	Wedge	860/6	1:53 PM	1:58 PM	Ss
P47/56	5/24/2025	20	Jv6416	Wedge	860/5	3:49 PM	3:52 PM	Texture texture

clean air and water systems

Panel Seaming Summary

Project Name: Ames Ash Pond Closure
QC Monitor: Humberto Avila
Project Number: 24048
Material: 40 mil LLDPE

Seam Number	Date Seamed	Final Seam Length (feet)	Welder/Machine Number	Weld Type Ext / Wedge	Machine Temp/ Speed/ Preheat	Time		Comments
						Start	Stop	
P47/57	5/24/2025	10	Jv6416	Wedge	860/5	3:47 PM	3:49 PM	Texture texture
P48/57	5/24/2025	19	Jv6416	Wedge	860/5	3:45 PM	3:47 PM	Texture texture
P48/58	5/24/2025	11	Jv6416	Wedge	860/5	3:43 PM	3:45 PM	Texture texture
P49/58	5/24/2025	13	Jv6416	Wedge	860/5	3:40 PM	3:43 PM	Texture texture
P5/32	5/24/2025	21	Jv6416	Wedge	860/4	9:29 AM	9:33 AM	Texture texture
P5/33	5/24/2025	8	Jv6416	Wedge	860/4	9:33 AM	9:35 AM	Texture texture
P50/51	5/24/2025	170	Jv6416	Wedge	860/6	2:23 PM	2:42 PM	S/S
P51/52	5/24/2025	143	Jov6421	Wedge	860/5	2:25 PM	2:43 PM	Ss
P52/53	5/24/2025	130	Jov6421	Wedge	860/5	2:50 PM	3:06 PM	Ss
P53/54	5/24/2025	109	Jv6416	Wedge	860/6	2:50 PM	3:03 PM	Ss
P54/55	5/24/2025	85	JV6416	Wedge	860/6.00	3:05 PM	3:15 PM	S/s
P55/56	5/24/2025	58	JOv6421	Wedge	860/5.00	3:08 PM	1:15 PM	S/S
P56/57	5/24/2025	43	JV/6426	Wedge	860/6.00	3:18 PM	3:23 PM	
P6/33	5/24/2025	23	Jv6416	Wedge	860/4	9:33 AM	9:39 AM	Texture texturev
P6/34	5/24/2025	7	Jv6416	Wedge	860/4	9:39 AM	9:40 AM	Texture texture
P7/34	5/24/2025	23	Jv6416	Wedge	860/4	9:40 AM	9:43 AM	Texture texture
P7/35	5/24/2025	6	Jv6416	Wedge	860/4	9:43 AM	9:44 AM	Texture texture

clean air and water systems

Panel Seaming Summary

Project Name: Ames Ash Pond Closure
QC Monitor: Humberto Avila
Project Number: 24048
Material: 40 mil LLDPE

Seam Number	Date Seamed	Final Seam Length (feet)	Welder/Machine Number	Weld Type Ext / Wedge	Machine Temp/ Speed/ Preheat	Time		Comments
						Start	Stop	
P8/35	5/24/2025	25	Jv6416	Wedge	860/4	9:44 AM	9:48 AM	Texture texture
P8/36	5/24/2025	5	Jv6416	Wedge	860/4	9:48 AM	9:48 AM	Texture texture
P9/36	5/24/2025	26	Jv6416	Wedge	860/5	9:48 AM	9:55 AM	Texture texture
P40/67	5/25/2025	204	Jv6416	Wedge	860/6	8:14 AM	8:40 AM	Ss
P48/49	5/25/2025	13	JV/6416	Wedge	860/6.00	2:00 PM	2:01 PM	S/S
P50/59	5/25/2025	188	Jv6416	Wedge	860/6	6:39 AM	7:04 AM	Ss
P57/58	5/25/2025	24	J0v/6421	Wedge	860/5.00	3:19 PM	3:22 PM	S/S
P59/60	5/25/2025	171	Jov6421	Wedge	860/5	6:50 AM	7:12 AM	Ss
P59/67	5/25/2025	26	Jv6416	Wedge	860/4	10:36 AM	10:41 AM	Texture texture
P60/61	5/25/2025	152	Jv6416	Wedge	860/6	7:07 AM	7:25 AM	Ss
P60/68	5/25/2025	21	Jv6416	Wedge	860/4	10:32 AM	10:36 AM	Texture texture
P60/68	5/25/2025	7	Jv6416	Wedge	860/4	10:36 AM	10:36 AM	Texture texture
P61/62	5/25/2025	138	Jov6421	Wedge	860/5	7:14 AM	7:31 AM	Ss
P61/68	5/25/2025	10	Jv6416	Wedge	860/4	10:31 AM	10:32 AM	Texture texture
P61/69	5/25/2025	19	Jv6416	Wedge	860/4	10:26 AM	10:31 AM	Texture texture
P62/63	5/25/2025	138	Jv6416	Wedge	860/6	7:28 AM	7:44 AM	Se
P62/63	5/25/2025	120	Jv6416	Wedge	860/6	7:28 AM	7:49 AM	Ss

clean air and water systems

Panel Seaming Summary

Project Name: Ames Ash Pond Closure
QC Monitor: Humberto Avila
Project Number: 24048
Material: 40 mil LLDPE

Seam Number	Date Seamed	Final Seam Length (feet)	Welder/Machine Number	Weld Type Ext / Wedge	Machine Temp/ Speed/ Preheat	Time		Comments
						Start	Stop	
P62/69	5/25/2025	13	Jv6416	Wedge	860/4	10:24 AM	10:27 AM	Texture texture
P62/70	5/25/2025	16	Jv6416	Wedge	860/4	10:22 AM	10:24 AM	Texture texture
P63/64	5/25/2025	97	Jov6421	Wedge	860/5	7:34 AM	7:45 AM	Ss
P63/70	5/25/2025	16	Jv6416	Wedge	860/4	10:20 AM	10:23 AM	Texture texture
P63/71	5/25/2025	13	Jv6416	Wedge	860/4	10:18 AM	10:20 AM	Texture texture
P64/65	5/25/2025	75	Jov6421	Wedge	860/5	7:48 AM	7:55 AM	Ss
P64/71	5/25/2025	19	Jv6416	Wedge	860/4	10:15 AM	10:18 AM	Texture texture
P64/73	5/25/2025	10	Jv6416	Wedge	860/4	10:13 AM	10:15 AM	Texture texture
P65/66	5/25/2025	56	Jv6416	Wedge	860/6	7:49 AM	7:57 AM	Ss
P65/73	5/25/2025	22	Jv6416	Wedge	860/4	10:10 AM	10:13 AM	Texture texture
P65/75	5/25/2025	8	Jv6416	Wedge	860/4	10:09 AM	10:10 AM	Texture texture
P66/75	5/25/2025	23	Jv/6416	Wedge	860/4.00	10:06 AM	10:09 AM	T/t
P66/76	5/25/2025	21	JV/6416	Wedge	860/4.00	10:02 AM	10:06 AM	
P66/78	5/25/2025	13	JV/6416	Wedge	860/4.00	10:00 AM	10:02 AM	T/T
P67/68	5/25/2025	180	Jov6421	Wedge	860/5	8:15 AM	8:37 AM	Ss
P68/69	5/25/2025	154	Jov6421	Wedge	860/5	8:40 AM	8:59 AM	Ss
P69/70	5/25/2025	134	Jv6416	Wedge	860/6	8:46 AM	9:00 AM	Ss

clean air and water systems

Panel Seaming Summary

Project Name: Ames Ash Pond Closure
QC Monitor: Humberto Avila
Project Number: 24048
Material: 40 mil LLDPE

Seam Number	Date Seamed	Final Seam Length (feet)	Welder/Machine Number	Weld Type Ext / Wedge	Machine Temp/ Speed/ Preheat	Time		Comments
						Start	Stop	
P70/71	5/25/2025	56	Jov6421	Wedge	860/5	9:03 AM	9:10 AM	Ss
P70/72	5/25/2025	52	Jov6421	Wedge	860/5	9:10 AM	9:16 AM	Ss
P71/72	5/25/2025	23	Jv6416	Wedge	860/4	9:02 AM	9:05 AM	Texture texture
P71/73	5/25/2025	31	Jov6421	Wedge	860/5	9:25 AM	9:29 AM	Ss
P72/73	5/25/2025	16	Jov6421	Wedge	860/5	9:22 AM	9:25 AM	Ss
P72/74	5/25/2025	38	Jov6421	Wedge	860/5	9:18 AM	9:22 AM	Ss
P73/74	5/25/2025	23	Jv6416	Wedge	860/4	9:08 AM	9:12 AM	Texture texture
P73/75	5/25/2025	23	Jov6421	Wedge	860/5	9:30 AM	9:31 AM	Ss
P74/75	5/25/2025	36	Jov6421	Wedge	860/5	9:31 AM	9:36 AM	Ss
P75/76	5/25/2025	10	Jv6416	Wedge	860/6	9:18 AM	9:19 AM	Ss
P75/77	5/25/2025	26	Jv6416	Wedge	860/6	9:19 AM	9:22 AM	Ss
P76/77	5/25/2025	23	Jv6416	Wedge	860/4	9:12 AM	9:15 AM	Texture texture
P76/78	5/25/2025	3	Jv6416	Wedge	860/6	9:29 AM	9:29 AM	Ss
P77/78	5/25/2025	26	Jv6416	Wedge	860/6	9:27 AM	9:30 AM	Ss
P38/79	5/31/2025	374	Jov6421	Wedge	860/7	11:26 AM	11:58 AM	Ss
P40/79	5/31/2025	405	Jv6416	Wedge	860/5.5	11:45 AM	12:30 PM	St
P39/79	5/31/2025	35	Jov6421	Wedge	860/7	11:59 AM	12:07 PM	Ss

clean air and water systems

Non-Destructive Test Summary

Project Name: Ames Ash Pond Closure
QC Monitor: Humberto Avila
Project Number: 24048
Material: 40 mil LLDPE

Seam Number	Date Tested	Location / Seam Length Tested	Air					Vacuum	Comments
			Air Pressure				Air Test Results (P/F)	Vac. Test Results (P/F)	
			Start		End				
			PSI	Time	PSI	Time			
P68/69	5/25/25	Fsl	30	9:11	30	9:16	P		
P66/78	5/25/25	FSL	30	10:04	30	10:09	P		
P2/3	5/23/25	Fsl	30	14:40	30	14:45	P		
P3/4	5/23/25	Fsl	30	14:45	30	14:50	P		
P4/5	5/23/25	131 north to south eos	30	14:55	30	15:00	P		
P5/6	5/23/25	Fsl	30	15:00	28	15:05	P		
P6/7	5/23/25	Fsl	30	15:05	30	15:10	P		
P7/8	5/23/25	Fsl	30	15:10	30	15:15	P		
P8/9	5/23/25	Fsl	30	15:15	30	15:20	P		
P9/10	5/23/25	Fsl	30	15:16	30	15:21	P		
P4/5	5/23/25	18 north to south eos	30	15:25	30	15:30	P		
P1/11	5/23/25	Fsl	30	15:35	28	15:40	P		
P1/2	5/23/25	Fsl	30	15:36	30	15:41	P		
P11/12	5/23/25	Fsl	30	15:40	28	15:45	P		
P12/13	5/23/25	Fsl	30	15:45	30	15:50	P		
P13/14	5/23/25	Fsl	30	15:55	29	16:00	P		
P14/15	5/23/25	Fsl	30	16:00	30	16:05	P		
P15/16	5/23/25	Fsl	30	16:05	29	16:10	P		
P16/17	5/23/25	23 north to south eos	30	16:10	29	16:15	P		

clean air and water systems

Non-Destructive Test Summary

Project Name: Ames Ash Pond Closure
QC Monitor: Humberto Avila
Project Number: 24048
Material: 40 mil LLDPE

Seam Number	Date Tested	Location / Seam Length Tested	Air					Vacuum	Comments
			Air Pressure				Air Test Results (P/F)	Vac. Test Results (P/F)	
			Start		End				
			PSI	Time	PSI	Time			
P16/17	5/23/25	46 south to north eos	30	16:13	28	16:18	P		
P17/18	5/23/25	Fsl	30	16:16	30	16:21	P		
P18/19	5/23/25	Fsl	30	16:22	30	16:27	P		
P24/25	5/23/25	Fsl	30	18:00	30	18:05	P		
P21/22	5/23/25	Fsl	30	18:06	29	18:11	P		
P25/26	5/23/25	Fsl	30	18:11	30	18:16	P		
P26/27	5/23/25	Fsl	30	18:12	30	18:17	P		
P27/28	5/23/25	Fsl	30	18:13	30	18:18	P		
P23/24	5/23/25	Fsl	30	18:13	30	18:18	P		
P20/21	5/23/25	Fsl	30	18:32	30	18:37	P		
P19/28	5/23/25	Fsl	30	18:35	30	18:40	P		
P18/28	5/23/25	Fsl	30	18:39	30	18:44	P		
P15/25	5/23/25	Fsl	30	18:41	30	18:46	P		
P18/27	5/23/25	Fsl	30	18:41	30	18:46	P		
P17/27	5/23/25	Fsl	30	18:43	30	18:48	P		
P14/24	5/23/25	Fsl	30	18:45	29	18:50	P		
P17/26	5/23/25	Fsl	30	18:45	30	18:50	P		
P15/24	5/23/25	Fsl	30	18:47	30	18:52	P		
P16/26	5/23/25	Fsl	30	18:49	30	18:54	P		

clean air and water systems

Non-Destructive Test Summary

Project Name: Ames Ash Pond Closure
QC Monitor: Humberto Avila
Project Number: 24048
Material: 40 mil LLDPE

Seam Number	Date Tested	Location / Seam Length Tested	Air					Vacuum	Comments
			Air Pressure				Air Test Results (P/F)	Vac. Test Results (P/F)	
			Start		End				
			PSI	Time	PSI	Time			
P16/25	5/23/25	Fsl	30	18:51	30	18:56	P		
P14/23	5/23/25	Fsl	30	19:04	28	19:09	P		
P13/23	5/23/25	Fsl	30	19:05	28	19:10	P		
P12/21	5/23/25	Fsl	30	19:10	29	19:15	P		
P11/21	5/23/25	Fsl	30	19:11	30	19:16	P		
P1/20	5/23/25	Fsl	30	19:13	30	19:18	P		
P13/22	5/23/25	Fsl	30	19:14	30	19:19	P		
P11/20	5/23/25	Fsl	30	19:20	30	19:25	P		
P12/22	5/23/25	Fsl	30	19:24	30	19:29	P		
P29/30	5/24/25	Fsl	30	8:37	30	8:42	P		
P30/31	5/24/25	Fsl	30	8:44	30	8:49	P		
P31/32	5/24/25	Fsl	30	8:45	30	8:50	P		
P32/33	5/24/25	Fsl	30	8:47	28	8:52	P		
P33/34	5/24/25	Fsl	30	8:52	30	8:57	P		
P34/35	5/24/25	62 east to west eos	30	8:57	28	9:02	P		
P35/36	5/24/25	Fsl	30	8:59	30	9:04	P		
P36/37	5/24/25	Fsl	30	9:01	28	9:06	P		
P1/29	5/24/25	Fsl	30	9:19	30	9:24	P		
P2/29	5/24/25	Fsl	30	9:21	30	9:26	P		

clean air and water systems

Non-Destructive Test Summary

Project Name: Ames Ash Pond Closure
QC Monitor: Humberto Avila
Project Number: 24048
Material: 40 mil LLDPE

Seam Number	Date Tested	Location / Seam Length Tested	Air					Vacuum	Comments
			Air Pressure				Air Test Results (P/F)	Vac. Test Results (P/F)	
			Start		End				
			PSI	Time	PSI	Time			
P2/30	5/24/25	Fsl	30	9:29	30	9:34	P		
P3/30	5/24/25	Fsl	30	9:32	30	9:37	P		
P3/31	5/24/25	Fsl	30	9:34	30	9:39	P		
P4/31	5/24/25	Fsl	30	9:36	30	9:41	P		
P4/32	5/24/25	Fsl	30	9:38	30	9:43	P		
P34/35	5/24/25	12 west to east eos	30	9:40	30	9:45	P		
P5/32	5/24/25	Fsl	30	9:40	28	9:45	P		
P5/33	5/24/25	Fsl	30	9:42	26	9:47	P		
P6/33	5/24/25	Fsl	30	9:44	30	9:49	P		
P6/34	5/24/25	Fsl	30	9:46	30	9:51	P		
P7/34	5/24/25	Fsl	30	9:48	30	9:53	P		
P7/35	5/24/25	Fsl	30	9:50	30	9:55	P		
P8/35	5/24/25	Fsl	30	9:51	30	9:56	P		
P6/8	5/24/25	Fsl	30	9:56	30	10:01	P		
P9/36	5/24/25	Fsl	30	10:01	29	10:06	P		
P10/37	5/24/25	Fsl	30	10:03	30	10:08	P		
P40/41	5/24/25	Fsl	30	13:13	30	13:18	P		
P41/42	5/24/25	Fsl	30	13:35	30	13:40	P		
P42/43	5/24/25	Fsl	30	13:36	28	13:41	P		

clean air and water systems

Non-Destructive Test Summary

Project Name: Ames Ash Pond Closure
QC Monitor: Humberto Avila
Project Number: 24048
Material: 40 mil LLDPE

Seam Number	Date Tested	Location / Seam Length Tested	Air					Vacuum	Comments
			Air Pressure				Air Test Results (P/F)	Vac. Test Results (P/F)	
			Start		End				
			PSI	Time	PSI	Time			
P43/44	5/24/25	Fsl	30	13:37	30	13:42	P		
P44/45	5/24/25	Fsl	30	13:39	30	13:44	P		
P38/39	5/24/25	Fsl	30	13:49	30	13:54	P		
P45/46	5/24/25	Fsl	30	13:57	30	14:02	P		
P46/47	5/24/25	Fsl	30	13:58	30	14:03	P		
P47/48	5/24/25	Fsl	30	13:59	30	14:04	P		
P48/49	5/24/25	Fsl	30	14:00	30	14:05	P		
P50/51	5/24/25	Fsl	30	15:12	30	15:17	P		
P51/52	5/24/25	Fsl	30	15:13	29	15:18	P		
P52/53	5/24/25	Fsl	30	15:15	30	15:20	P		
P53/54	5/24/25	Fsl	30	15:21	29	15:26	P		
P57/58	5/24/25	Fsl	30	15:24	28	15:32	P		
P54/55	5/24/25	Fsl	30	15:24	28	15:29	P		
P55/56	5/24/25	Fsl	30	15:25	30	15:30	P		
P56/57	5/24/25	Fsl	30	15:26	30	15:31	P		
P49/58	5/24/25	Fsl	30	15:50	30	15:55	P		
P48/58	5/24/25	Fsl	30	16:00	30	16:05	P		
P48/57	5/24/25	Fsl	30	16:03	30	16:08	P		
P47/57	5/24/25	Fsl	30	16:04	30	16:09	P		

clean air and water systems

Non-Destructive Test Summary

Project Name: Ames Ash Pond Closure
QC Monitor: Humberto Avila
Project Number: 24048
Material: 40 mil LLDPE

Seam Number	Date Tested	Location / Seam Length Tested	Air					Vacuum	Comments
			Air Pressure				Air Test Results (P/F)	Vac. Test Results (P/F)	
			Start		End				
			PSI	Time	PSI	Time			
P47/56	5/24/25	Fsl	30	16:06	30	16:11	P		
P46/56	5/24/25	Fsl	30	16:11	30	16:16	P		
P46/55	5/24/25	Fsl	30	16:30	30	16:35	P		
P45/55	5/24/25	Fsl	30	16:35	30	16:40	P		
P45/54	5/24/25	Fsl	30	16:36	30	16:41	P		
P44/53	5/24/25	Fsl	30	16:40	30	16:45	P		
P43/52	5/24/25	Fsl	30	16:42	30	16:47	P		
P42/51	5/24/25	19 west to east eos	30	16:43	30	16:48	P		
P42/51	5/24/25	8 east to west eos	30	16:45	30	16:50	P		
P41/50	5/24/25	Fsl	30	16:46	30	16:51	P		
P22/23	5/24/25	Fsl	30	17:44	30	17:49	P		
P50/59	5/25/25	Fsl	30	7:23	30	7:28	P		
P50/59	5/25/25	Fsl	30	7:23	30	7:28	P		
P59/60	5/25/25	Fsl	30	7:24	30	7:29	P		
P59/60	5/25/25	Fsl	30	7:24	30	7:29	P		
P60/61	5/25/25	Fsl	30	7:25	30	7:30	P		
P60/61	5/25/25	Fsl	30	7:25	30	7:30	P		
P61/62	5/25/25	Fsl	30	7:30	30	7:35	P		
P61/62	5/25/25	Fsl	30	7:30	30	7:35	P		

clean air and water systems

Non-Destructive Test Summary

Project Name: Ames Ash Pond Closure
QC Monitor: Humberto Avila
Project Number: 24048
Material: 40 mil LLDPE

Seam Number	Date Tested	Location / Seam Length Tested	Air					Vacuum	Comments
			Air Pressure				Air Test Results (P/F)	Vac. Test Results (P/F)	
			Start		End				
			PSI	Time	PSI	Time			
P29/39	5/25/25	Fsl	30	7:40	30	7:45	P		
P29/38	5/25/25	Fsl	30	7:41	30	7:46	P		
P20/38	5/25/25	Fsl	30	7:47	30	7:52	P		
P62/63	5/25/25	Fsl	30	7:50	30	7:55	P		
P62/63	5/25/25	Fsl	30	7:50	30	7:55	P		
P63/64	5/25/25	Fsl	30	7:52	30	7:57	P		
P64/65	5/25/25	Fsl	30	7:56	30	8:01	P		
P65/66	5/25/25	Fsl	30	7:57	30	8:02	P		
P40/67	5/25/25	Fsl	30	8:50	30	8:55	P		
P67/68	5/25/25	Fsl	30	8:54	30	8:59	P		
P69/70	5/25/25	Fsl	30	9:14	30	9:19	P		
P70/71	5/25/25	Fsl	30	9:15	30	9:20	P		
P71/73	5/25/25	Fsl	30	9:34	28	9:35	P		
P73/75	5/25/25	Fsl	30	9:36	30	9:41	P		
P71/72	5/25/25	Fsl	30	9:37	30	9:42	P		
P74/75	5/25/25	Fsl	30	9:38	30	9:43	P		
P73/74	5/25/25	Fsl	30	9:40	30	9:45	P		
P70/72	5/25/25	Fsl	30	9:49	30	9:54	P		
P72/73	5/25/25	Fs	30	9:51	30	9:56	P		

clean air and water systems

Non-Destructive Test Summary

Project Name: Ames Ash Pond Closure
QC Monitor: Humberto Avila
Project Number: 24048
Material: 40 mil LLDPE

Seam Number	Date Tested	Location / Seam Length Tested	Air					Vacuum	Comments
			Air Pressure				Air Test Results (P/F)	Vac. Test Results (P/F)	
			Start		End				
			PSI	Time	PSI	Time			
P75/76	5/25/25	Fsl	30	9:54	30	9:59	P		
P75/77	5/25/25	Fsl	30	9:54	30	9:59	P		
P76/77	5/25/25	Fsl	30	9:55	30	10:00	P		
P72/74	5/25/25	Fsl	30	9:56	28	10:01	P		
P77/78	5/25/25	Fsl	30	10:01	30	10:06	P		
P66/76	5/25/25	Fsl	30	10:06	38	10:11	P		
P75/66	5/25/25	Fsl	30	10:06	30	10:11	P		
P65/75	5/25/25	Fsl	30	10:13	29	10:18	P		
P65/73	5/25/25	Fsl	30	10:15	29	10:20	P		
P64/73	5/25/25	Fsl	30	10:18	28	10:23	P		
P64/71	5/25/25	Fsl	30	10:19	30	10:24	P		
P62/69	5/25/25	Fsl	30	10:21	30	10:26	P		
P63/71	5/25/25	Fsl	30	10:23	30	10:28	P		
P63/70	5/25/25	Fsl	30	10:24	30	10:29	P		
P62/70	5/25/25	Fsl	30	10:25	30	10:30	P		
P61/69	5/25/25	Fsl	30	10:30	30	10:35	P		
P61/68	5/25/25	Fsl	30	10:32	30	10:37	P		
P60/68	5/25/25	Fsl	30	10:35	30	10:40	P		
P59/67	5/25/25	Fsl	30	10:40	30	10:45	P		

clean air and water systems

Non-Destructive Test Summary

Project Name: Ames Ash Pond Closure
QC Monitor: Humberto Avila
Project Number: 24048
Material: 40 mil LLDPE

Seam Number	Date Tested	Location / Seam Length Tested	Air					Vacuum	Comments
			Air Pressure				Air Test Results (P/F)	Vac. Test Results (P/F)	
			Start		End				
			PSI	Time	PSI	Time			
P60/67	5/25/25	Fsl	30	10:36	30	10:41	P		
P38/79	5/31/25	Fsl	30	12:37	28	12:42	P		
P39/79	5/31/25	Fsl	30	13:20	28	13:25	P		
P40/79	5/31/25	86 East to West eos	30	13:34	30	13:39	P		
P40/79	5/31/25	86 East to 97 East	30	13:33	29	13:38	P		
P40/49	5/31/25	97 East to East eos	30	13:40	30	13:45	P		

clean air and water systems

Seam Destructive Test Summary - Field

Project Name: Ames Ash Pond Closure
Project Number: 24048
QC Monitor: Humberto Avila
Material: 40 mil LLDPE

Sample DT#	Seam #	Date	Welder ID/ Machine#	Peel (ppi) Inside					Peel (ppi) Outside					Shear (ppi) Outside					Result	Comments	Sample Location	
																					Easting	Northing
DS-1	P5/6	5/27/2025	Jov/6421	104	94	101	102	100	101	101	104	106	107	122	117	127	121	125	P	Ss	1613444.2	739509.7
DS-2	P8/9	5/27/2025	Jov/6421	102	106	101	108	106	106	102	106	105	99	122	118	124	113	115	P	Ss	1613444.2	739547.35
DS-3	P12/13	5/27/2025	Jov/6421	112	107	103	93	106	104	95	96	98	107	119	122	123	115	118	P	S/S	1613661.9	739465.54
DS-4	P15/14	5/27/2024	Jov/6421	100	88	113	94	109	95	109	105	108	105	128	128	124	115	119	P	S/s	1613706.8	739565.3
DS-5	P4/3	5/27/2025	JV/6416	109	105	104	106	109	99	85	102	106	105	111	125	125	123	112	P	S/S	1613552.3	739474.52
DS-6	P24/25	5/27/2025	Jov/6421	99	110	93	108	96	88	102	91	91	107	120	124	132	120	118	P	S/S	1613753.4	739491.72
DS-7	P27/28	5/27/2025	JV/6416	122	116	115	123	126	125	122	108	105	122	116	122	114	118	123	P	S/S	1613797.9	739557.46
DS-8	P14/23	5/27/2025	JV/6416	90	89	97	84	92	86	83	93	83	92	108	102	104	106	115	P	T/T	1613695	739468.15
DS-9	P32/33	5/27/2025	JV/6416	102	97	105	100	91	100	95	99	94	90	125	112	128	120	119	P	Ss	1613414.3	739466.73
DS-10	P34/35	5/27/2025	Jov/6421	103	101	109	100	111	100	99	102	92	101	121	122	129	122	120	P	Ss	1613509.1	739526.37
DS-11	P4/31	5/27/2025	JV/6416	88	87	88	95	82	85	97	97	96	95	122	115	105	123	125	P	T/T	1613537.8	739443.52
DS-12	P40/41	5/27/2025	JV/6416	94	92	98	93	95	94	93	100	89	92	120	123	121	123	119	P	S/S	1613700.7	739316.68
DS-13	P45/46	5/27/2025	Jov/6421	91	107	105	106	100	95	95	102	103	115	123	121	124	120	116	P	S/S	1613779.8	739209.98
DS-14	P56/55	5/27/2025	Jov/6421	108	92	96	105	110	102	107	102	104	96	117	112	118	115	127	P	S/S	1613726.2	739160.5
DS-15	P45/54	5/27/2025	JV/6416	103	103	92	91	101	97	92	99	94	103	114	102	111	99	115	P	T/T	1613697.6	739218.2
DS-16	P63/62	5/27/2025	JV/6416	89	87	99	80	89	86	81	86	88	91	114	114	114	114	113	P	S/S	1613508.6	739152.88
DS-17	P68/69	5/27/2025	Jov/6421	92	95	89	89	85	97	95	92	97	94	112	110	112	107	112	P	S/S	1613461.8	739271.38
DS-18	P75/74	5/27/2025	Jov/6421	93	95	97	84	91	98	94	100	92	97	116	116	116	115	111	P	S/S	1613416.5	739184.32
DS-19	P75/77	5/27/2025	JV/6416	100	100	108	103	105	94	95	106	99	97	122	114	115	117	117	P	S/S	1613412	739162.11
DS-20	P62/20	5/27/2025	JV/6416	94	90	86	96	94	90	75	94	90	93	105	108	106	105	99	P	T/T	1613514.6	739243.6
DS-21	P8/9/35/36	5/27/2025	JS/7541	97	73	77	69	87						101	97	98	102	100	P	R2 Ext. Weld	1613446.2	739534.19
DS-22	P27/R85	5/28/2025	JG/76	96	56	83	82	72						101	105	105	107	103	P	Ext. Weld	1613427.7	739611.41
DS-23	P17/R91	5/28/2025	Jv/7542	85	86	82	87	87						91	87	88	87	102	P	Ext. Weld	1613431.8	739607.11
DS-24	P40/79	5/31/2025	Jv6421	86	75	72	81	72	84	80	85	80	70	90	100	86	86	81	P	S t	1613493.9	739385.51

clean air and water systems

Repair Summary

Project Name: Ames Ash Pond Closure

QC Monitor: Humberto Avila

Project Number: 24048

Material: 40 mil LLDPE

Repair Number	Repair Date	Operator/ Mach #	Seam # OR Panel #	Repair Type (patch, bead, ext weld, cap, DT, boot)	Size of Repair	Date Vacuum Tested	Vac. Test Results (P/F)	Repair Location	
								Easting	Northing
R1	5/27/25	Js7581	P9/10/36/37	Patch	2×5	5/28/2025	P	1613423.71	739554.5143
R2	5/27/25	Js7541	P8/9/35/36	Cap	3×10	5/28/2025	P	1613445.33	739534.1296
R3	5/27/25	Jv7542	P75/76/77	Patch	2×2	5/28/2025	P	1613419.04	739162.3706
R4	5/27/25	Jv7542	P66/75/76	Patch	2x2	5/28/2025	P	1613426.25	739162.396
R5	5/27/25	Jv7542	P65/66/75	Patch	2×2	5/28/2025	P	1613441.9	739177.4728
R6	5/27/25	Jv7542	P65/73/75	Patch	2×2	5/28/2025	P	1613447.63	739182.725
R7	5/27/25	Jv7542	P64/65/73	Patch	2×2	5/28/2025	P	1613463.85	739197.6826
R8	5/27/25	Jv7542	P64/71/73	Patch	2×2	5/28/2025	P	1613471.95	739205.3975
R9	5/28/25	Jv7542	P75/77	Ds-19	2×5	5/28/2025	P	1613411.96	739162.1065
R10	5/28/25	Jv7542	P74/75	Ds-18	2×5	5/28/2025	P	1613416.49	739184.3154
R11	5/28/25	JG/76	P 73/74/75	Patch	2x2	5/28/2025	P	1613427.26	739183.9538
R12	5/28/25	JG/076	P72/73/74	Patch	2x2	5/28/2025	P	1613427.92	739205.3658
R13	5/28/25	JG/76	71/72/23	Patch	2x2	5/28/2025	P	1613443.54	739205.6024
R14	5/28/25	JG/76	P70/71/72	Patch	2x2	5/28/2025	P	1613443.89	739227.0144
R15	5/28/25	JV/7524	71/63/64	Patch	2x2	5/28/2025	P	1613486.99	739217.4504
R16	5/28/25	Jv7542	P63/70/71	Patch	2×5	5/28/2025	P	1613495.69	739226.3795
R17	5/28/25	Jv7542	P62/6370	Patch	2×5	5/28/2025	P	1613508.45	739237.4582
R18	5/28/25	Jg076	P68/69	Ds-17	2×5	5/28/2025	P	1613461.8	739271.377
R19	5/28/25	Jv7542	P62/7	Ds-20	2×5	5/28/2025	P	1613514.57	739243.6026
R20	5/28/25	Jv7542	P62/69/70	Patch	2×2	5/28/2025	P	1613520.69	739248.8126

clean air and water systems

Repair Summary

Project Name: Ames Ash Pond Closure

QC Monitor: Humberto Avila

Project Number: 24048

Material: 40 mil LLDPE

Repair Number	Repair Date	Operator/ Mach #	Seam # OR Panel #	Repair Type (patch, bead, ext weld, cap, DT, boot)	Size of Repair	Date Vacuum Tested	Vac. Test Results (P/F)	Repair Location	
								Easting	Northing
R21	5/28/25	Jv7542	P66/76/77/78	Patch	2×4	5/28/2025	P	1613419.35	739140.9511
R22	5/28/25	Jv7542	P61/62/69	Patch	2×4	5/28/2025	P	1613530.58	739257.4629
R23	5/28/25	Js7541	P8/9	Ds-2	2×6	5/28/2025	P	1613444.25	739547.3499
R24	5/28/25	Js7541	P8/R2	Ds-21	2×5	5/28/2025	P	1613446.16	739534.1943
R25	5/28/25	Js7541	P34/35	Ds-10	2×5	5/28/2025	P	1613444.25	739509.6963
R26	5/28/25	Js7541	P7/8/34/35	Cap	2×10	5/28/2025	P	1613466.84	739512.4252
R27	5/28/25	Js7541	P6/7/33/34	Cap	2×10	5/28/2025	P	1613488.19	739491.3002
R28	5/28/25	Js7541	P34/35	Patch	2×2	5/28/2025	P	1613406.84	739509.8922
R29	5/28/25	Js7541	P32/33	Ds-9	2×5	5/28/2025	P	1613414.3	739466.7328
R30	5/28/25	Js7541	P5/6/32/33	Cap	2×11	5/28/2025	P	1613510.95	739469.8173
R31	5/28/25	Js7541	P5/6	Ds-1	2×5	5/28/2025	P	1613509.08	739526.3678
R32	5/28/25	Js7541	P4/32	Patch	2×4	5/28/2025	P	1613528.27	739452.7767
R33	5/28/25	Js7541	P4/31/32	Ds-11 P4/31	2×11	5/28/2025	P	1613537.82	739443.5224
R34	5/28/25	Js7541	P3/4	Ds-5	2×5	5/28/2025	P	1613552.3	739474.5215
R35	5/28/25	Js7541	P3/4/31	Patch	2×2	5/28/2025	P	1613551.34	739429.5886
R36	5/28/25	Js7541	P3/30/31	Patch	2×2	5/28/2025	P	1613557.37	739423.7454
R37	5/28/25	Js7541	P2/3/30	Patch	2×2	5/28/2025	P	1613571.15	739409.6834
R38	5/28/25	Js7541	P2/29/3	Patch	2×3	5/28/2025	P	1613579.24	739402.2041
R39	5/28/25	Js7541	P1/2/29	Patch	2×4	5/28/2025	P	1613592.45	739389.291
R40	5/28/25	Jv7542	P61/68/69	Patch	2×4	5/28/2025	P	1613544.81	739270.7222

clean air and water systems

Repair Summary

Project Name: Ames Ash Pond Closure

QC Monitor: Humberto Avila

Project Number: 24048

Material: 40 mil LLDPE

Repair Number	Repair Date	Operator/ Mach #	Seam # OR Panel #	Repair Type (patch, bead, ext weld, cap, DT, boot)	Size of Repair	Date Vacuum Tested	Vac. Test Results (P/F)	Repair Location	
								Easting	Northing
R41	5/28/25	Jv7542	P60/61/68	Patch	2×2	5/28/2025	P	1613552.77	739277.4897
R42	5/28/25	Jv7542	P60/67/68	Patch	2×2	5/28/2025	P	1613569.66	739292.7073
R43	5/28/25	Jv7542	P59/6/67	Patch	2×2	5/28/2025	P	1613575.11	739297.2097
R44	5/28/25	Jv7542	P40/41/50/59/67	Patch	4×6	5/28/2025	P	1613598.5	739314.3356
R45	5/28/25	Jv7542	P62/63	Ds-16	2×5	5/28/2025	P	1613508.63	739152.8817
R46	5/28/25	Jv7542	P62	Boot	3×3	5/28/2025	P	1613521.88	739137.9784
R47	5/28/25	Jv7542	P62	Boot	3×3	5/28/2025	P	1613524.39	739137.6232
R48	5/28/25	Jg076	P55/56	Ds-14	2×5	5/28/2025	P	1613726.17	739160.5007
R49	5/28/25	Jg076	P48/49/58	Patch	2×2	5/28/2025	P	1613778.02	739144.0129
R50	5/28/25	Jg076	P47/48/57	Patch	2×2	5/28/2025	P	1613756.19	739165.3291
R51	5/28/25	Jg076	P47/56/57	Patch	2×2	5/28/2025	P	1613749.01	739172.0191
R52	5/28/24	Jg076	P46/47/56	Patch	2×2	5/28/2025	P	1613734.56	739185.9929
R53	5/28/25	Jg076	P46/55/56	Patch	2×2	5/28/2025	P	1613727.97	739191.7572
R54	5/28/25	Jg076	P45/46/55	Patch	2×2	5/28/2025	P	1613710.46	739207.2592
R55	5/28/25	Jg076	P45/54/55	Patch	2×2	5/28/2025	P	1613706.78	739210.7556
R56	5/28/25	Jv7542	P45/54	Ds-15	2×5	5/28/2025	P	1613697.58	739218.2038
R57	5/28/25	Jv7542	P44/45/53/54	Patch	2×3	5/28/2025	P	1613686.17	739228.3573
R58	5/28/25	Jg076	P45/46	Ds-13	2×5	5/28/2025	P	1613779.78	739209.9833
R59	5/28/25	Jv7542	P43/44/52/53	Patch	2×3	5/28/2025	P	1613664.14	739250.0635
R60	5/28/25	Jv7542	P42/43/51/52	Patch	3×4	5/28/2025	P	1613642.24	739270.7896

clean air and water systems

Repair Summary

Project Name: Ames Ash Pond Closure

QC Monitor: Humberto Avila

Project Number: 24048

Material: 40 mil LLDPE

Repair Number	Repair Date	Operator/ Mach #	Seam # OR Panel #	Repair Type (patch, bead, ext weld, cap, DT, boot)	Size of Repair	Date Vacuum Tested	Vac. Test Results (P/F)	Repair Location	
								Easting	Northing
R61	5/28/25	Jv7542	P42/51	Patch	2×4	5/28/2025	P	1613628.38	739285.2489
R62	5/28/25	Jv7542	P41/42/50/51	Patch	2×3	5/28/2025	P	1613620.88	739292.0164
R63	5/28/25	Jg076	P40/41	Ds-12	2×6	5/28/2025	P	1613700.67	739316.6833
R64	5/28/25	Jg076	P43	Cap	5×22	5/28/2025	P	1613796.86	739265.6747
R65	5/28/25	Js7541	P1/2/29/38	Patch	3×4	5/28/2025	P	1613605.08	739379.4052
R66	5/28/25	Js7541	P1/11/20	Patch	2×2	5/28/2025	P	1613614.91	739392.9293
R67	5/28/25	Js7541	P11/20/21	Patch	2×2	5/28/2025	P	1613624.31	739400.9713
R68	5/28/25	Js7541	P11/12/21	Patch	2×2	5/28/2025	P	1613636.97	739413.3203
R69	5/28/25	Js7541	P12/21/22	Patch	2×2	5/28/2025	P	1613647.98	739423.8521
R70	5/28/25	Js7541	P12/13/22	Patch	2×2	5/28/2025	P	1613659.49	739434.7951
R71	5/28/25	Js7541	P13/22/23	Patch	2×2	5/28/2025	P	1613671.52	739445.8054
R72	5/28/25	Js7541	P12/13	Ds-3	2×5	5/28/2025	P	1613661.85	739465.5446
R73	5/28/25	Js7541	P13/14/23	Patch	2×2	5/28/2025	P	1613681.86	739456.2655
R74	5/28/25	Js7541	P14/23/24	Ds-8 14/23	2×6	5/28/2025	P	1613694.95	739468.1505
R75	5/28/25	Js7541	P15/24/25	Patch	2×2	5/28/2025	P	1613717.9	739491.1613
R76	5/28/25	Js7541	P15/16/25	Patch	2×2	5/28/2025	P	1613726.12	739499.6283
R77	5/28/25	Js7541	P14/15/24	Patch	2×2	5/28/2025	P	1613704.21	739477.9061
R78	5/28/25	Js7541	P24/25	Ds-6	2×6	5/28/2025	P	1613753.4	739491.7172
R79	5/28/25	Js7541	P16/25/26	Patch	2×2	5/28/2025	P	1613740.99	739514.05
R80	5/28/25	Js7541	P16/17/26	Patch	2×2	5/28/2025	P	1613747.99	739520.7812

clean air and water systems

Repair Summary

Project Name: Ames Ash Pond Closure

QC Monitor: Humberto Avila

Project Number: 24048

Material: 40 mil LLDPE

Repair Number	Repair Date	Operator/ Mach #	Seam # OR Panel #	Repair Type (patch, bead, ext weld, cap, DT, boot)	Size of Repair	Date Vacuum Tested	Vac. Test Results (P/F)	Repair Location	
								Easting	Northing
R81	5/28/25	Js7541	P16/17	Patch	2×2	5/28/2025	P	1613749.98	739546.3932
R82	5/28/25	Js7541	P17/26/27	Patch	2×2	5/28/2025	P	1613765.27	739535.3652
R83	5/28/25	Js7541	P17/18/27	Patch	2×2	5/28/2025	P	1613770.23	739542.7006
R84	5/28/25	Jg076	P18/27/28	Patch	2×6	5/28/2025	P	1613791.7	739558.0046
R85	5/28/25	Jg076	P18/19/28	Patch	2×2	5/28/2025	P	1613794.16	739563.3733
R86	5/28/25	Js7541	P14/15	Ds-4	2×6	5/28/2025	P	1613706.8	739565.3046
R87	5/28/25	Jg076	P29/38/39	Patch	2×2	5/28/2025	P	1613431.37	739379.0414
R88	5/28/25	JV/7542	P4/5	Boot	4x4	5/28/2025	P	1613532.48	739573.362
R89	5/28/25	JV/7542	P4	Boot	3x4	5/28/2025	P	1613534.88	739573.9924
R50	5/28/25	Jg76	P46/57/58	Patch	2×2	5/28/2025	P	1613769.96	739151.9993
R91	5/28/25	Jv7542	P17	Boot	4×4	5/28/2025	P	1613758.58	739572.4975
R92	5/28/25	Jv7542	P17	Boot	4×4	5/28/2025	P	1613756.2	739572.5772
R93	5/28/25	JV/7542	P17/R91	DS-23	2x5	5/28/2025	P	1613759.89	739575.284
R94	5/28/25	JV/7542	P17/R85	DS-22	2x5	5/28/2025	P	1613790.67	739556.5111
R95	5/31/25	Jv7542	P38/39/79	Patch	2×2	5/31/2025	P	1613430.38	739357.6728
R96	5/31/25	Jv7542	P40/79	Patch	2×4	5/31/2025	P	1613487.11	739335.462
R97	5/31/25	Jv7542	P79	Patch	1×1	5/31/2025	P	1613533.56	739343.2132
R98	5/31/25	Jv7542	P40/79	Cap	2×30	5/31/2025	P	1613525.19	739335.2258
R99	5/31/25	Jv7542	P40/79	DS-24	2×4	5/31/2025	P	1613531.48	739328.8335

Appendix K

Cover Protective Soil and Topsoil Laboratory Test Results

K.1 – Source Test Results

TEAM Services
Grounded in Science
Focused on Results

A2LA ISO 17025 Accredited Cert. 576.01
Validated by the U.S. Army Corps of Engineers

TEAM Services, Inc.
717 SE 6th St.
Des Moines, IA 50309

Phone: 515.282.8818
Fax: 515.282.8741
Web: teamservices.com

2024 City of Ames Ash Pond Closure
Ames, IA
Project No. 2-9571

May 29, 2025

Dispersive Characteristics of Clay Soil by Double Hydrometer

ASTM D4221-18, D7928-21

Sample ID: 1
Sample Description: Offsite Import Cover Soil
Date Received: 5/23/2025
Date Tested: 5/24/2025
Tested By: NG

Method	Description	% Finer 0.002 mm
ASTM D4221	De-aired, Not Dispersed Specimen[1], (n):	0.42%
ASTM D7928	Dispersed Specimen[2], (d):	16.09%

1 From attached chart, n = 1.4 %F / 0.002 mm = x %F / 0.006 mm = 0.42% Finer
2 From attached chart, d = 2.3 %F / 0.0018 mm = x %F / 0.0007 mm = 0.89 + 15.2 = 16.1% Finer
*Percent Dispersion = n / d * 100*

Percent Dispersion: 3%

Refer to the attached individual Particle Size Distribution Reports

Jeff Roberts
President

Des Moines ▪ Ft Dodge ▪ Spirit Lake ▪ Mason City ▪ Cedar Rapids ▪ Waterloo ▪ Davenport ▪ Dubuque, IA
Omaha, NE ▪ Scottsdale, AZ

Particle Size Distribution Report

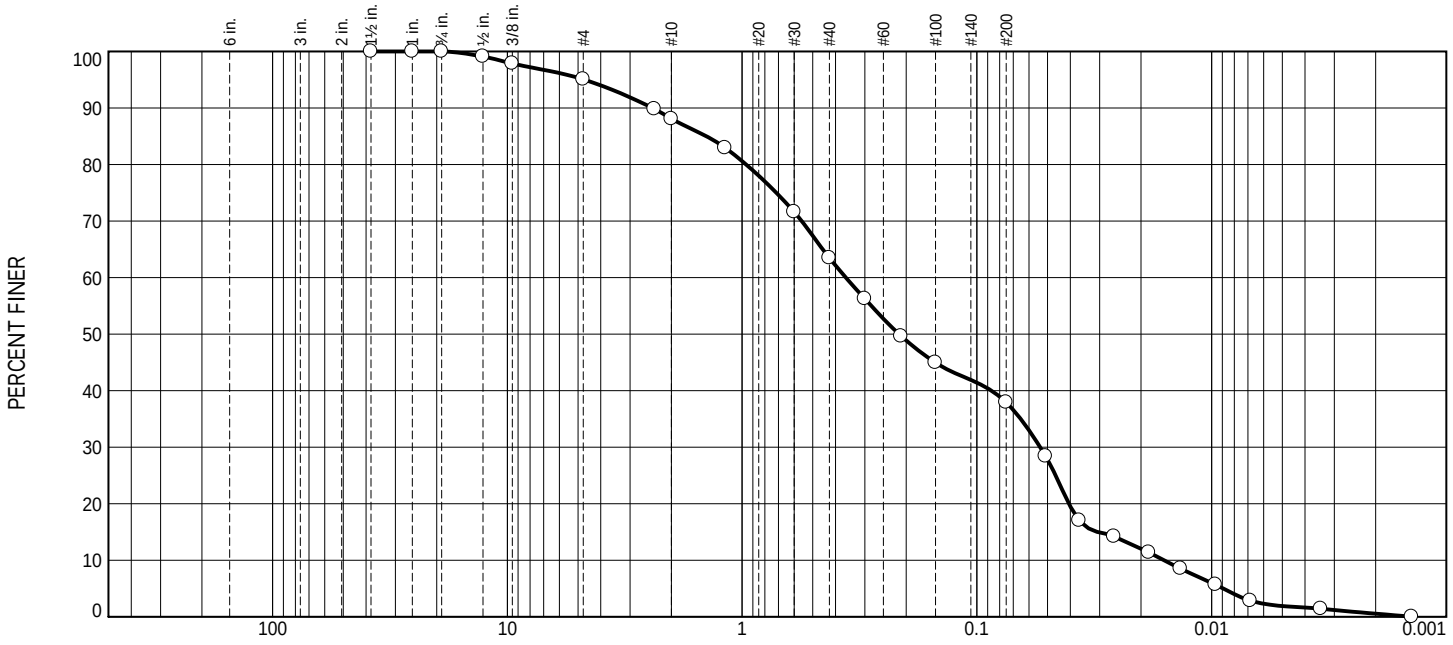

% +3"	% Gravel		% Sand			% Fines	
	Coarse	Fine	Coarse	Medium	Fine	Silt	Clay
0.0	0.0	4.9	7.0	24.6	25.6	37.4	0.5

Test Results (ASTM D6913 & D1140, D7928)			
Sieve Size or Diam. (mm.)	Finer (%)	Spec.* (%)	Out of Spec. (%)
1-1/2"	100.0		
1"	100.0		
3/4"	100.0		
1/2"	99.1		
3/8"	97.9		
#4	95.1		
#8	89.8		
#10	88.1		
#16	82.9		
#30	71.6		
#40	63.5		
#50	56.3		
#70	49.6		
#100	44.9		
#200	37.9		
0.0509 mm.	28.4		
0.0367 mm.	17.0		
0.0260 mm.	14.2		
0.0185 mm.	11.4		
0.0136 mm.	8.5		
0.0096 mm.	5.7		
0.0068 mm.	2.8		
0.0034 mm.	1.4		
0.0014 mm.	0.0		

* (no specification provided)

Location: Offsite Import Cover Soil, ASTM D4221

Material Description

Sieve Test (ASTM D6913 & D1140)

Test Date: 5/28/25 Technician: NG

Test Notes

Hydrometer Test (ASTM D4221)

Test Date: 5/28/25 Technician: NG

Test Notes

Atterberg (ASTM D4318)

PL= LL= PI=

Coefficients

D_{90}= 2.4052 D_{85}= 1.4185

D_{60}= 0.3614 D_{50}= 0.2147

D_{30}= 0.0538 D_{15}= 0.0306

D_{10}= 0.0159

C_u= 22.66 C_c= 0.50

USCS (ASTM D2487)

Date Sampled:

Date Received: 5/23/25

Checked By: JR

Title: LM

TEAM Services
Geotechnical and Construction Material Consultants

Client: SCS Engineers
Project: 2024 City of Ames Ash Pond Closure

Project No: 2-9571 Figure

Particle Size Distribution Report

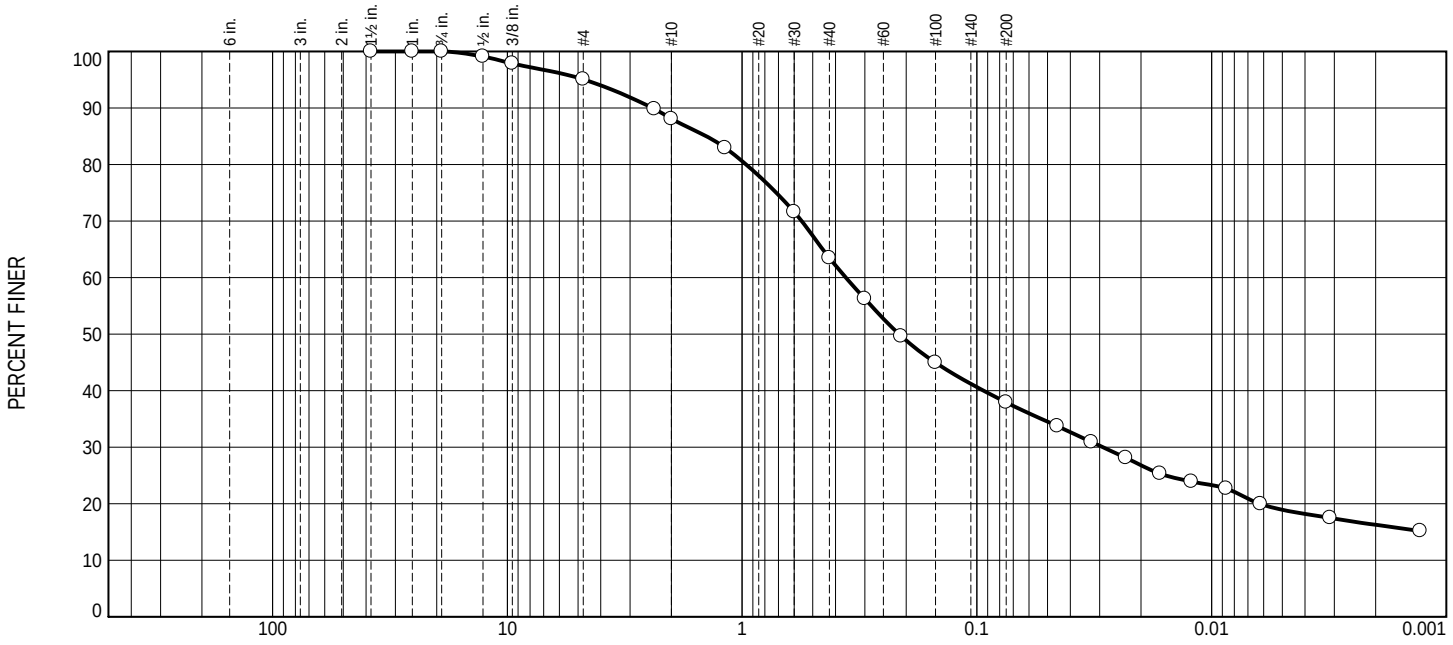

% +3"	% Gravel		% Sand			% Fines	
	Coarse	Fine	Coarse	Medium	Fine	Silt	Clay
0.0	0.0	4.9	7.0	24.6	25.6	21.6	16.3

Test Results (ASTM D6913 & D1140, D7928)			
Sieve Size or Diam. (mm.)	Finer (%)	Spec.* (%)	Out of Spec. (%)
1-1/2"	100.0		
1"	100.0		
3/4"	100.0		
1/2"	99.1		
3/8"	97.9		
#4	95.1		
#8	89.8		
#10	88.1		
#16	82.9		
#30	71.6		
#40	63.5		
#50	56.3		
#70	49.6		
#100	44.9		
#200	37.9		
0.0453 mm.	33.7		
0.0324 mm.	30.9		
0.0232 mm.	28.1		
0.0166 mm.	25.3		
0.0122 mm.	23.9		
0.0087 mm.	22.7		
0.0062 mm.	19.9		
0.0031 mm.	17.5		
0.0013 mm.	15.2		

* (no specification provided)

Location: Offsite Import Cover Soil, ASTM D7928

Material Description

Sieve Test (ASTM D6913 & D1140)

Test Date: 5/28/25 Technician: NG

Test Notes

Hydrometer Test (ASTM D7928)

Test Date: 5/28/25 Technician: NG

Test Notes

Atterberg (ASTM D4318)

PL= LL= PI=

Coefficients

D_{90}= 2.4052 D_{85}= 1.4185

D_{60}= 0.3614 D_{50}= 0.2147

D_{30}= 0.0291 D_{15}=

D_{10}=

C_u= C_c=

USCS (ASTM D2487)

Date Sampled:

Date Received: 5/23/25

Checked By: JR

Title: LM

TEAM Services
Geotechnical and Construction Material Consultants

Client: SCS Engineers

Project: 2024 City of Ames Ash Pond Closure

Project No: 2-9571

Figure

Project: City of Ames Ash Pond Closure
SCS Project #: 27219356.02

Section: 33 22 00
Title: Submittal #S17R1 – Cover Soils

Submittal Review

- [X] Conforms as submitted
- [ ] Conforms as noted – Resubmittal is:
  - [ ] Not required
  - [ ] Required
  - [ ] Noted portions only
  - [ ] For record only
- [ ] Does not conform
- [ ] Not required by contract documents
- [ ] For information only

Corrections or comments made on submittals during this review do not relieve the contractor from compliance with requirements of the drawings and specifications. This check is only for review of general conformance with the design concept of the project and general compliance with the information given in the contract documents. The contractor is responsible for; confirming and correlating all quantities and dimensions; selecting fabrication processes and techniques of construction; coordinating contractor's work with that of all other trades; and performing contractor's work in a safe and satisfactory manner.

Comments: SEE APPENDIX E.1 FOR WEST SOIL STOCKPILE USED FOR COVER SOIL

Reviewed By: Matt Kuhlenengel	Date: 04/21/2025
SCS QC Review By: Deb Nelson	Date: 04/21/2025

G:\Project\27219356.02\Data and Calculations\CQA Documents\Submittals\S17 - Cover Soils\SCS Review S17R1-Cover Soils_250421.docx

SHOP DRAWING TRANSMITTAL

DATE: 4/18/2025

Project: Ames Ash Pond Closure & RDF Ash Pond Construction

Specification Section Number: 33 22 00 Earth work

Transmittal Number: 17 r1

1st Submittal _____ or Resubmital __X_____

Contract Item	Description of Material	Manufacturer	Drawing or Data No.	Action Taken
39,40	Soils - Perm			

As stated in the Contract Documents, the undersigned CONTRACTOR's submission of these Shop Drawings or samples shall constitute a representative to the OWNER and the ENGINEER that the CONTRACTOR has either determined and verified all quantities, dimensions, field construction criteria, materials, catalogue numbers and similar data or he assumes full responsibility for doing so, and that he has reviewed and coordinated each Shop Drawing or sample with the requirements of the work and the Contract Documents and he represents to the OWNER and the ENGINEER that item(s) described by these Shop Drawings do comply with the requirements of the Contract Documents. The undersigned Contractor certifies that the equipment included in this submittal complies with the latest requirements of the Occupational Health and Safety Act of 1970 including any standards or regulations established by the U.S. Secretary of Labor in administration of said act, and the Iowa Occupational Safety and Health Statutes.

4/18/2025

Supplier/Subcontractor:
JB Holland
Inroads pit

4 **(Date)**

JB Holland Construction, Inc.

2191 State Hwy 52, Decorah, IA 52101

FOR ENGINEER'S USE

n as designated above in accordance with the following legend:

A- No Exception Taken
B- Make Corrections Noted & Resubmit
C- Revise & Resubmit
D- Rejected
E- Submit Specified Item

BY: _____

DATE: _____

PERMEABILITY TEST RESULTS
Falling Head

Project Name: Ames Pond Closure and Construction Borrow Testing
Project No.: 2-9628
Sample: 0.9 **Date Received:** 4/9/2025
Sample Location: Proctor #6
Test Started: 4/9/2025 **Test Competed:** 4/18/2025
Test Procedure: ASTM D 5084 - 03 Falling Head Test (Method B)
Sample Description: Cl Dark Gray with Brown

INITIAL SAMPLE DATA

Wet Weight (g)	1300.8
Non-cut Height (in)	6.65
Diameter (in)	2.875
Moisture Content (%)	13.9
Dry Unit Weight (pcf)	100.8

FINAL SAMPLE DATA

Wet Weight (g)	1234.5
Final Cut Height (in)	6.09
Diameter (in)	2.875
Moisture Content (%)	18.3
Dry Unit Weight (pcf)	100.6

TEST DATA

Elapsed Time (hr)	Initial Head (in)	Final Head (in)	Coefficient of Permeability, k (cm/s)
20.83	133.04	115.04	3.6E-07
24.67	133.04	126.29	1.1E-07
74.28	133.04	116.79	9.0E-08
22.05	133.04	124.79	1.5E-07
25.85	133.04	121.91	1.7E-07
23.82	133.04	122.04	1.9E-07
23.45	133.04	122.16	1.9E-07
Average of last	**3**	**readings**	**1.8E-07**

Proctor Data		
Maximum Dry Denisty	112.0	pcf
Optimum Moisture	13.9	%

Remolded Compaction		
Compaction	90.0	%
Moisture Deviation	0.0	%

717 S.E. 6th St, Des Moines, IA 50309 (515) 282-8818 fax: (515) 282-8741 www.teamservices.com staff@teamservices.com

Des Moines ▪ Omaha ▪ Fort Dodge ▪ Spirit Lake ▪ Mason City ▪ Cedar Rapids ▪ Waterloo ▪ Davenport ▪ Dubuque

Particle Size Distribution Report

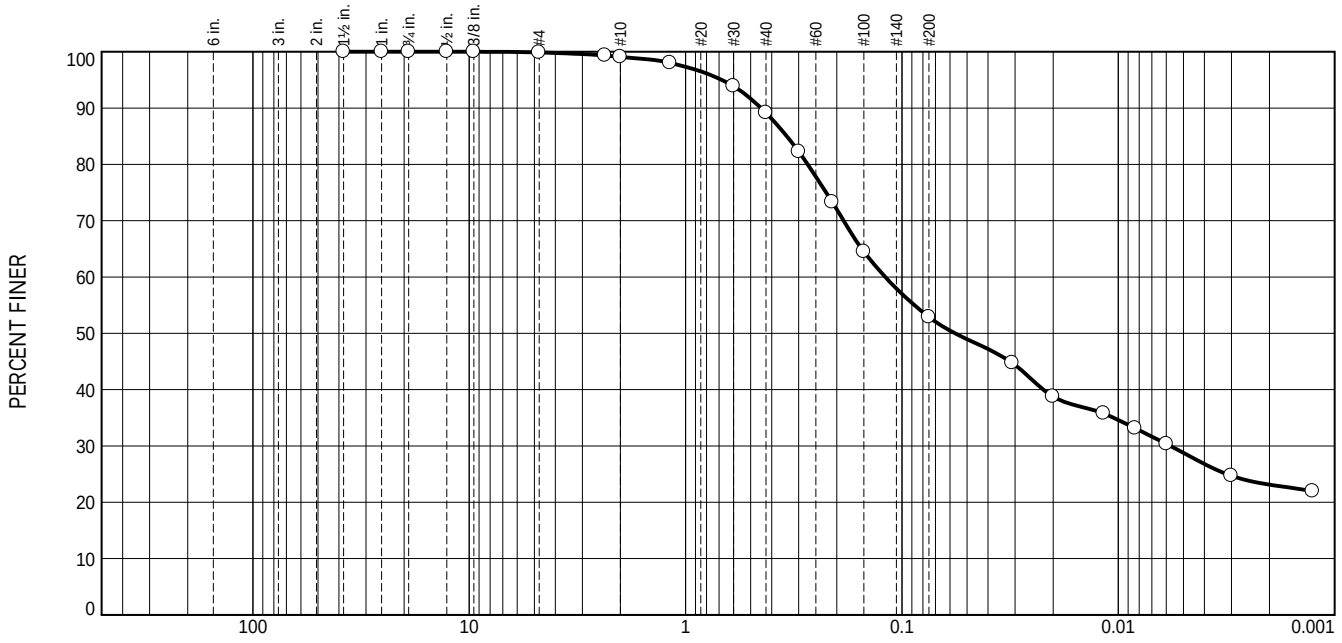

% +3"	% Gravel		% Sand			% Fines	
	Coarse	Fine	Coarse	Medium	Fine	Silt	Clay
0.0	0.0	0.1	0.8	9.9	36.3	29.8	23.1

Test Results (ASTM D6913 & D1140, D7928)			
Sieve Size or Diam. (mm.)	Finer (%)	Spec.* (%)	Out of Spec. (%)
1-1/2"	100.0		
1"	100.0		
3/4"	100.0		
1/2"	100.0		
3/8"	100.0		
#4	99.9		
#8	99.4		
#10	99.1		
#16	98.0		
#30	93.9		
#40	89.2		
#50	82.3		
#70	73.3		
#100	64.5		
#200	52.9		
0.0309 mm.	44.7		
0.0200 mm.	38.8		
0.0117 mm.	35.8		
0.0084 mm.	33.2		
0.0060 mm.	30.4		
0.0030 mm.	24.7		
0.0013 mm.	22.0		

· (no specification provided)

Material Description

CL Dark Gray with Brown

Sieve Test (ASTM D6913 & D1140)

Test Date: 4/3/25 Technician: NG

Test Notes

Hydrometer Test (ASTM D7928)

Test Date: 4/3/25 Technician: NG

Test Notes

pH = 6
Organic Content = 3.8%

Atterberg (ASTM D4318)

PL= 17 LL= 34 PI= 17

Coefficients

D_{90}= 0.4475 D_{85}= 0.3405
D_{60}= 0.1194 D_{50}= 0.0569
D_{30}= 0.0057 D_{15}=
D_{10}=
C_u= C_c=

USCS (ASTM D2487)

CL

Date Sampled: _____
Date Received: 3/28/25
Checked By: _____
Title: _____

TEAM Services
Geotechnical and Construction Material Consultants

Client: JB Holland Construction, Inc
Project: Ames Ash Pond Closure and Construction Borrow Testing

Project No: 2-9628 Figure

Particle Size, Atterberg Limit, and USCS Analyses for Soils

Client: SCS Engineers
Project: City of Ames Ash Pond Closure 2024
Sample ID: Soil - West Stockpile

TRI Log #: 24-002662.14

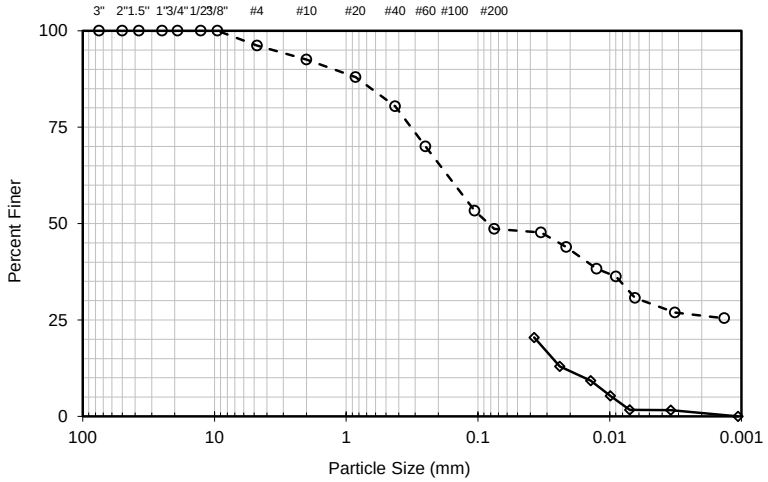

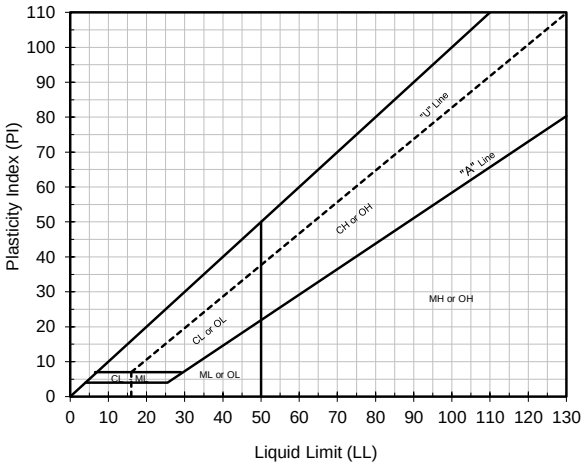

Mechanical Sieve				Sedimentation (Hydrometer)			
ASTM D6913				ASTM D7928		ASTM D4221	
Sieve Designation		Percent Passing	Gravel	Particle Size	Percent Passing	Particle Size	Percent Passing
			Sand				
-	mm		Fines	mm		mm	
3 in.	76.2	100.0		0.033	47.7	0.037	20.5
2 in.	50.8	100.0		0.021	43.9	0.024	13.0
1.5 in.	38.1	100.0		0.013	38.2	0.014	9.2
1 in.	25.4	100.0	3.8	0.009	36.3	0.010	5.3
3/4 in.	19.0	100.0		0.006	30.7	0.007	1.7
1/2 in.	12.7	100.0		0.003	27.0	0.003	1.6
3/8 in.	9.51	100.0		0.001	25.4	0.001	- -
No. 4	4.76	96.2		**Hydrometer Log-Linear Interpolation**			
No. 10	2.00	92.5		Particle Size	Percent Passing	Particle Size	Percent Passing
No. 20	0.841	88.0	47.6				
No. 40	0.420	80.4		mm		mm	
No. 60	0.250	70.0		0.002	26.1	0.002	- -
No. 140	0.106	53.4		N m,2µm,d	26	N m,2µm,nd	-
No. 200	0.074	48.6	48.6	Percent Dispersion		-	

Atterberg Limits	
ASTM D4318, Method A : Multipoint, Air Dried	
Liquid Limit	- -
Plastic Limit	- -
Plastic Index	- -
(NL = No Liquid Limit, NP = No Plastic Limit)	

Particle Size Log-Linear Interpolation					
D_x	85	60	50	30	10
mm	6.5E-01	1.5E-01	8.3E-02	5.6E-03	- -

Cu	- -	Cc	- -

USCS Classification (ASTM D2487)
- -

Moisture Content (%)	ASTM D2216	16.4
Organic Content (%)	ASTM D2974-C	- -
Carbonate Content (%)	ASTM D4373	- -
Specific Gravity	ASTM D854	- -

Jeffrey A. Kuhn, Ph.D, P.E. 2/25/2025
Analysis & Quality Review/Date

The testing herein is based upon accepted industry practice as well as the test method listed. Test results reported herein do not apply to samples other than those tested. TRI neither accepts responsibility for nor makes claim as to the final use and purpose of the material. TRI observes and maintains client confidentiality. TRI limits reproduction of this report, except in full, without prior approval of TRI.

K.2 – Representative Sample Test Results

MOISTURE - DENSITY RELATIONSHIP REPORT

(Proctor Test)

ASTM D 698-12 Method B Standard

PROJECT: **2024 City of Ames Ash Pond Closure**
Ames, IA

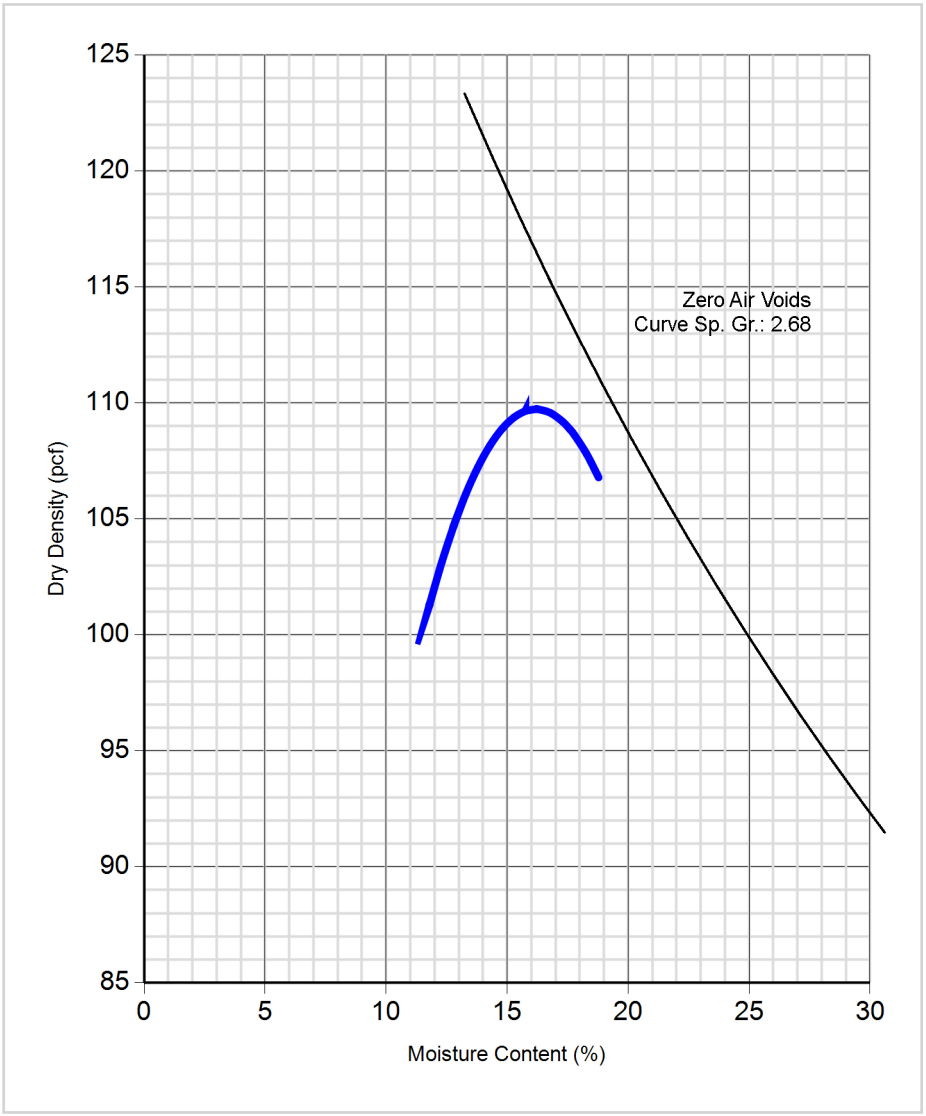

PROJECT NO: 2-9571

REPORT NO: 3-0

PROCTOR ID:	**6**

DATE RECEIVED: 06/18/2025

DATE TESTED: 06/22/2025

TESTED BY: JR

TEST RESULTS

MAXIMUM DRY DENSITY (pcf)
109.7

OPTIMUM MOISTURE (%)
16.2

Prep Method:: Moist

Rammer Type: Mechanical

Proctor points available upon request.

SOURCE: Onsite East Stockpile Topsoil

SAMPLE DESCRIPTION: Organic Lean CLAY, with sand, with gravel

Notes/Remarks:

APPROVED: *Andy Eisinger*

*Proctor reports shall not be reproduced, except in full, without our written permission.

TEAM Services, Inc.
717 S.E. 6th Street
Des Moines, IA 50309
515-282-8818
515-282-8741
www.teamservices.com
staff@teamservices.com

MOISTURE - DENSITY RELATIONSHIP REPORT

(Proctor Test)

ASTM D 698-12 Method B Standard

PROJECT: **2024 City of Ames Ash Pond Closure**
Ames, IA

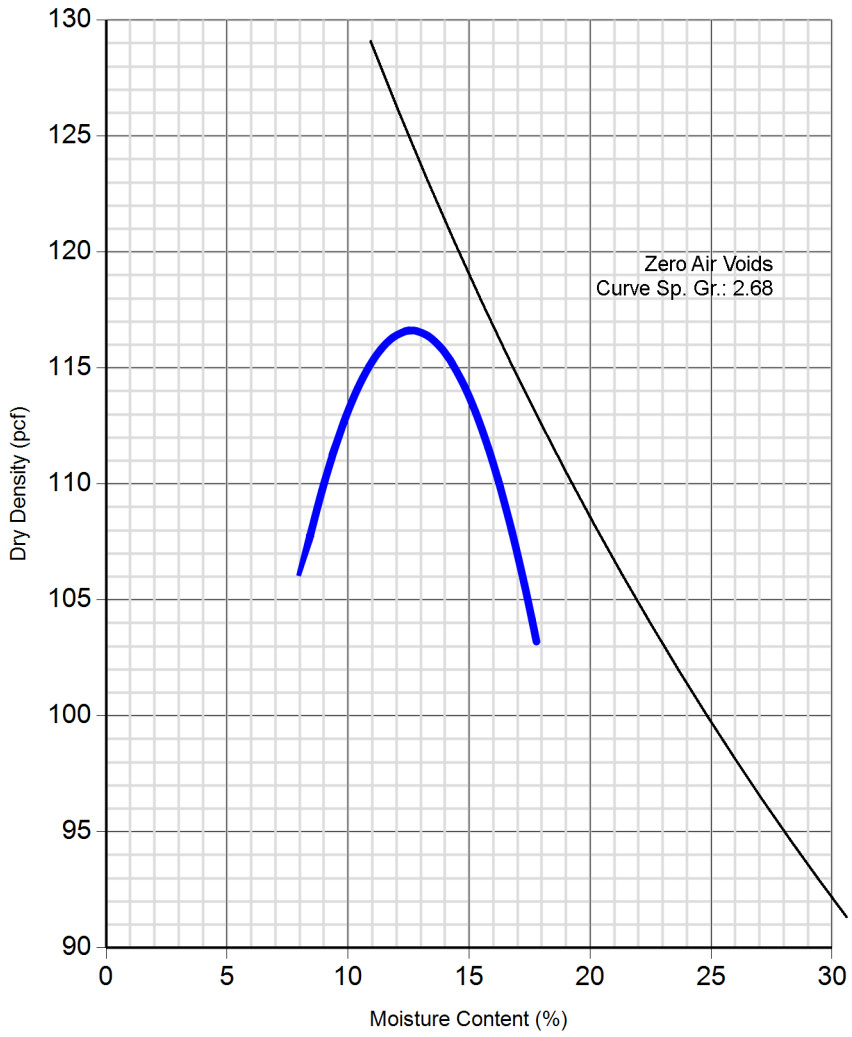

PROJECT NO: 2-9571

REPORT NO: 3-0

PROCTOR ID:	**7**

DATE RECEIVED: 06/18/2025

DATE TESTED: 06/22/2025

TESTED BY: JR

TEST RESULTS

MAXIMUM DRY DENSITY (pcf)

116.6

OPTIMUM MOISTURE (%)

12.6

Prep Method:: Moist

Rammer Type: Mechanical

Proctor points available upon request.

SOURCE: Offsite City Borrow

SAMPLE DESCRIPTION: Lean CLAY, with sand, with gravel, medium-dark brown

Notes/Remarks:

APPROVED: *Andy Eisinger*

*Proctor reports shall not be reproduced, except in full, without our written permission.

TEAM Services, Inc.
717 S.E. 6th Street
Des Moines, IA 50309
515-282-8818
515-282-8741
www.teamservices.com
staff@teamservices.com

MOISTURE - DENSITY RELATIONSHIP REPORT

(Proctor Test)

ASTM D 698-12 Method B Standard

PROJECT: **2024 City of Ames Ash Pond Closure**
Ames, IA

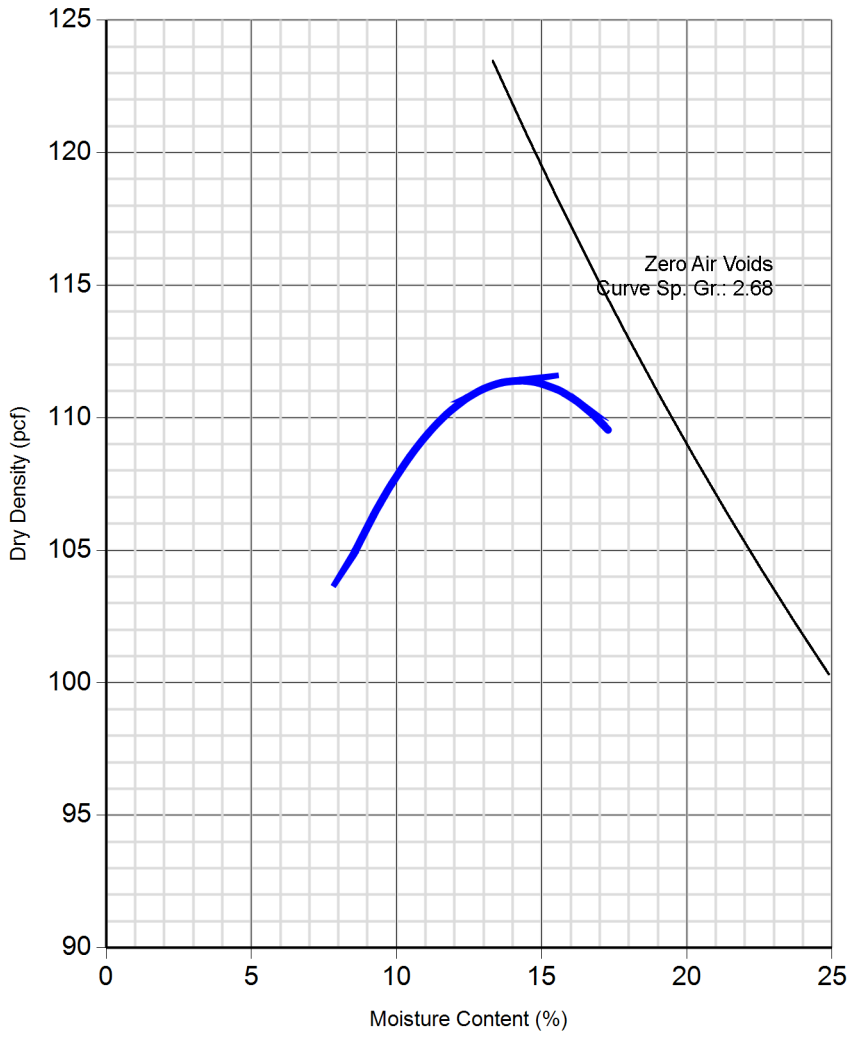

PROJECT NO: 2-9571

REPORT NO: 3-0

PROCTOR ID:	**8**

DATE RECEIVED: 06/18/2025

DATE TESTED: 06/22/2025

TESTED BY: JR

TEST RESULTS

MAXIMUM DRY DENSITY (pcf)
111.4

OPTIMUM MOISTURE (%)
14.2

Prep Method:: Moist

Rammer Type: Mechanical

Proctor points available upon request.

SOURCE: Onsite West Stockpile

SAMPLE DESCRIPTION: Lean CLAY, with sand, with gravel, medium brown

Notes/Remarks:

APPROVED: *Andy Eisinger*

*Proctor reports shall not be reproduced, except in full, without our written permission.

TEAM Services, Inc.
717 S.E. 6th Street
Des Moines, IA 50309
515-282-8818
515-282-8741
www.teamservices.com
staff@teamservices.com

MOISTURE - DENSITY RELATIONSHIP REPORT

(Proctor Test)

ASTM D 698-12 Method A Standard

PROJECT: **2024 City of Ames Ash Pond Closure**
Ames, IA

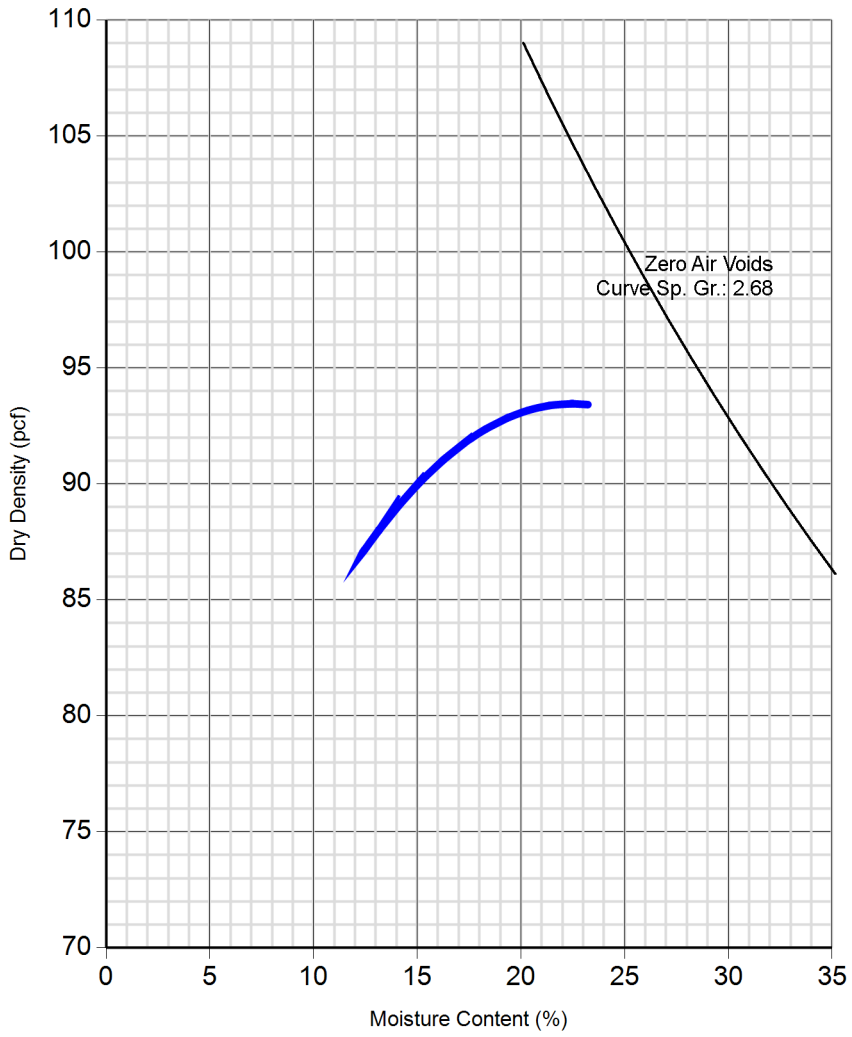

PROJECT NO: 2-9571

REPORT NO: 3-0

PROCTOR ID:	9

DATE RECEIVED: 06/18/2025

DATE TESTED: 06/22/2025

TESTED BY: JR

TEST RESULTS

MAXIMUM DRY DENSITY (pcf)
93.5

OPTIMUM MOISTURE (%)
22.5

Prep Method:: Moist

Rammer Type: Mechanical

Proctor points available upon request.

SOURCE: Offsite Cover Soil Borrow

SAMPLE DESCRIPTION: Organic Lean CLAY, dark brown (black)

Notes/Remarks:

APPROVED: *Andy Eisinger*

*Proctor reports shall not be reproduced, except in full, without our written permission.

TEAM Services, Inc.
717 S.E. 6th Street
Des Moines, IA 50309
515-282-8818
515-282-8741
www.teamservices.com
staff@teamservices.com

Appendix L

HDPE Pipe, Stormwater Structures, and Vault Manufacturer's Information

Project: City of Ames Ash Pond Closure
SCS Project #: 27219356.02

Section: 03 33 00
Title: Submittal #S11 – Precast Concrete

Submittal Review

- [X] Conforms as submitted
- [ ] Conforms as noted – Resubmittal is:
  - [ ] Not required
  - [ ] Required
  - [ ] Noted portions only
  - [ ] For record only
- [ ] Does not conform
- [ ] Not required by contract documents
- [ ] For information only

Corrections or comments made on submittals during this review do not relieve the contractor from compliance with requirements of the drawings and specifications. This check is only for review of general conformance with the design concept of the project and general compliance with the information given in the contract documents. The contractor is responsible for; confirming and correlating all quantities and dimensions; selecting fabrication processes and techniques of construction; coordinating contractor's work with that of all other trades; and performing contractor's work in a safe and satisfactory manner.

Comments:

Reviewed By: Matt Kuhlenengel	Date: 6/3/2024
SCS QC Review By: Marty Sturzl	Date: 6/3/2024

G:\Project\27219356.02\Data and Calculations\Submittals\S11 - Precast Concrete\SCS Review 11-Precast Concrete_240603_.docx

SHOP DRAWING TRANSMITTAL

DATE: 5/28/2024

Project: Ames Ash Pond Closure & RDF Ash Pond Construction

Specification Section Number: 03 33 00 Concrete

Transmittal Number: 11

1st Submittal X or Resubmital _____

Contract Item	Description of Material	Manufacturer	Drawing or Data No.	Action Taken
12	Pre Cast concrete Vault			

As stated in the Contract Documents, the undersigned CONTRACTOR's submission of these Shop Drawings or samples shall constitute a representative to the OWNER and the ENGINEER that the CONTRACTOR has either determined and verified all quantities, dimensions, field construction criteria, materials, catalogue numbers and similar data or he assumes full responsibility for doing so, and that he has reviewed and coordinated each Shop Drawing or sample with the requirements of the work and the Contract Documents and he represents to the OWNER and the ENGINEER that item(s) described by these Shop Drawings do comply with the requirements of the Contract Documents. The undersigned Contractor certifies that the equipment included in this submittal complies with the latest requirements of the Occupational Health and Safety Act of 1970 including any standards or regulations established by the U.S. Secretary of Labor in administration of said act, and the Iowa Occupational Safety and Health Statutes.

5/28/2024

Supplier/Subcontractor:
Wieser Concrete

(Autorized Signature of Contractor) **(Date)**

JB Holland Construction, Inc.

2191 State Hwy 52, Decorah, IA 52101

FOR ENGINEER'S USE

n as designated above in accordance with the following legend:

A- No Exception Taken
B- Make Corrections Noted & Resubmit
C- Revise & Resubmit
D- Rejected
E- Submit Specified Item

BY: _____

DATE: _____

JB HOLLAND CONSTRUCTION
AMES MUNICIPAL ELECTRIC SYSTEM
STEAM ELECTRIC PLANT – AMES, IA
(1 EA.) ASH CONTACT WATER COLLECTION VAULT

DRAWINGS SUBMITTED FOR APPROVAL

APPROVED BY: _____

APPROVAL DATE: _____

PRODUCTS NEEDED BY: _____

REVIEWED BY _____

REVIEW DATE _____

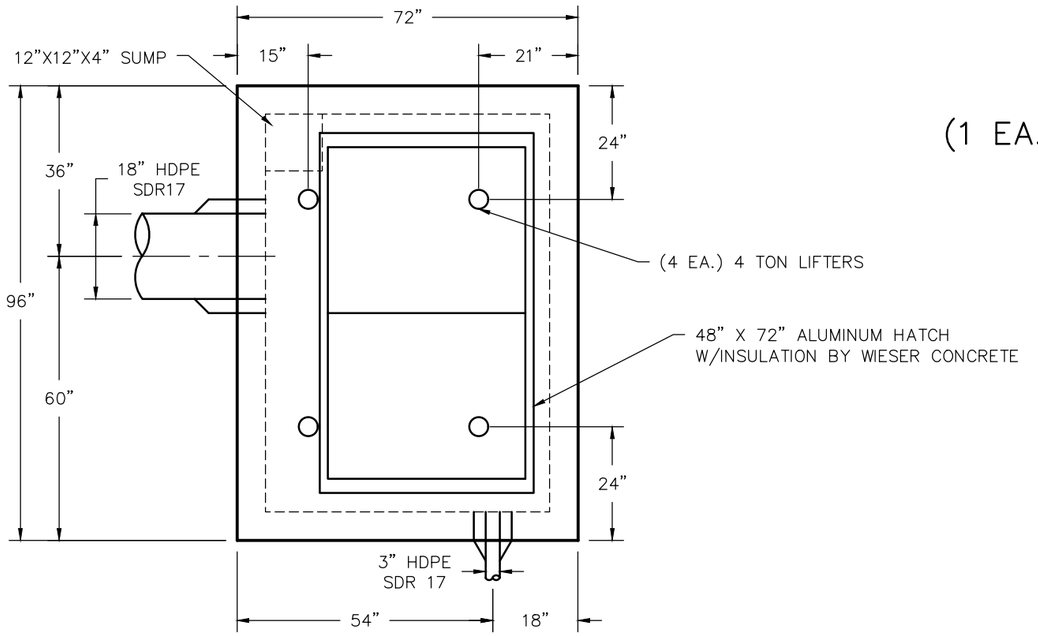

PLAN VIEW

NOTES:

CONCRETE – 28 DAY COMPRESSIVE F'C=5000 PSI., AIR ENTRAINED
REINFORCING – ASTM A-615 GRADE 60

APPROX. WEIGHTS:
- TOP SLAB = 5,520 LBS.
- MIDDLE SECTION = 8,366
- BASE SECTION = 9,194 LBS.

CS202 BUTYL RUBBER STRIPS AROUND PERIMETER FOR ALL JOINTS

BOOTS/GASKETS BY WIESER CONCRETE:
- (1 EA.) 8QRS BOOT
- (1 EA.) Z-LOK C107-18

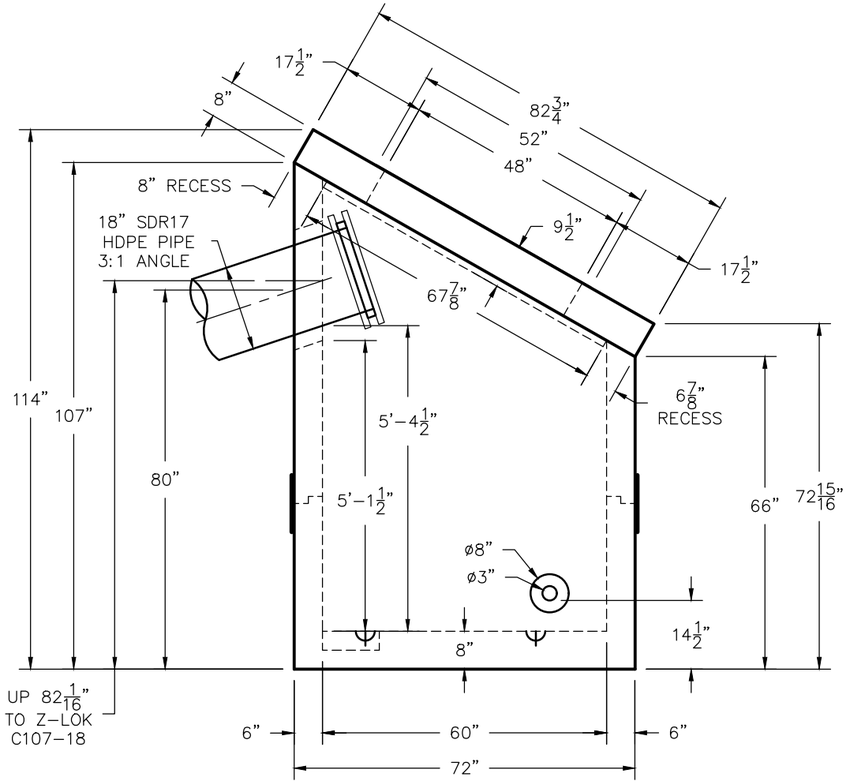

END VIEW

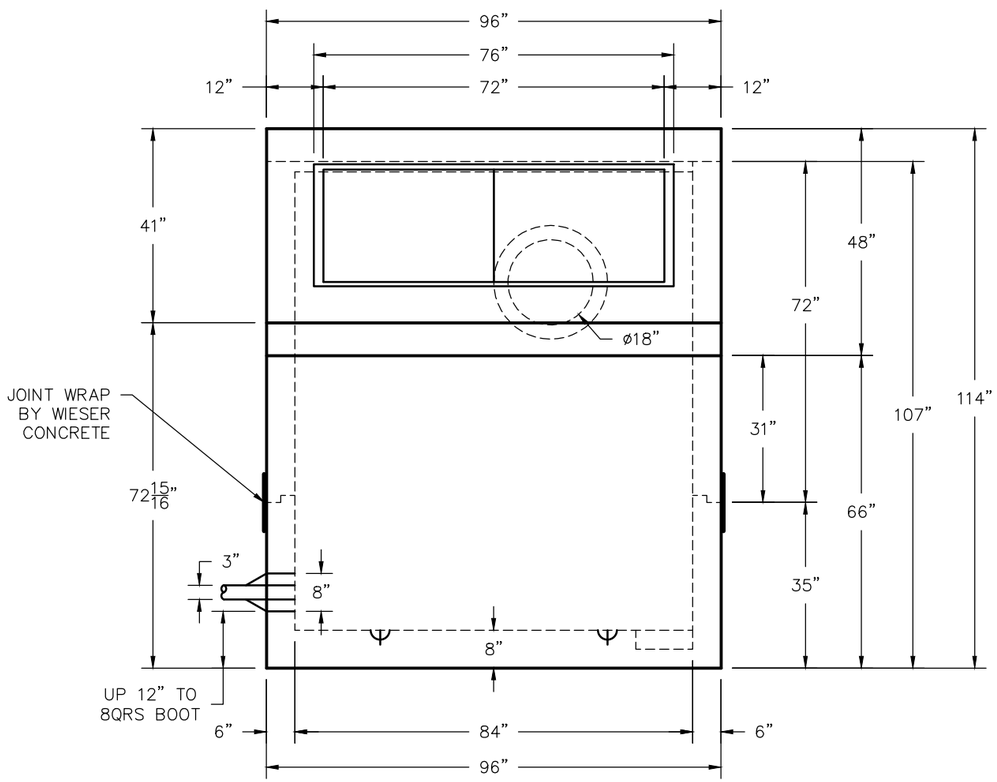

SIDE VIEW

REV NO.	DATE:

SCALE: 3/8" = 1'-0"

DRAWN BY: BDK

DATE: 05/22/2024

FILE: i:\auto cad\custom boxes\custom boxes 2024\jb holland -ames municipal electric system - ames, ia - 4x4, 5x7 leachate\jb holland -ames municipal electric system - ames, ia - 4x4, 5x7 leachate

WIESER CONCRETE
W3716 US HWY10. MAIDEN ROCK, WI 54750
800-325-8456

JB HOLLAND CONSTRUCITON
AMES MUNICIPAL ELECTRIC SYSTEM
LEACHATE RISER VAULT
AMES, IA
WIESER JOB# 24-117U

PRE POUR

POST POUR

SHEET NO. 1 OF 2

JB HOLLAND CONSTRUCTION
AMES MUNICIPAL ELECTRIC SYSTEM
STEAM ELECTRIC PLANT – AMES, IA
(1 EA.) AREA INTAKE DRAIN

DRAWINGS SUBMITTED FOR APPROVAL

APPROVED BY: _____

APPROVAL DATE: _____

PRODUCTS NEEDED BY: _____

REVIEWED BY _____

REVIEW DATE _____

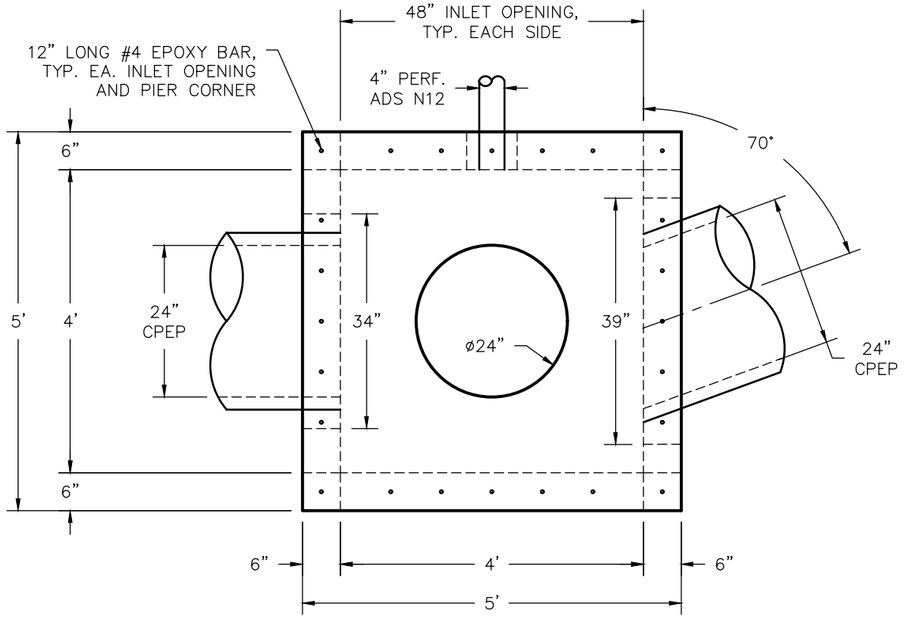

PLAN VIEW

NOTES:

CONCRETE – 28 DAY COMPRESSIVE F'C=5000 PSI., AIR ENTRAINED
REINFORCING – ASTM A-615 GRADE 60

APPROX. WEIGHTS:
TOP SLAB = 1,875 LBS.
BASE SECTION = 8,856 LBS.

REINFORCING DETAIL:

TOP SLAB = #4 BAR @ 6" O.C.E.W.
WALLS & BASE = #4 BAR @ 12" O.C.E.W.

- TRIM PIPE AND 24" ACCESS OPENINGS W/ (4 EA.) #4 DIAGONAL BARS
- INSTALL ADDITIONAL 12" VERTICAL #4 EPOXY BAR IN EACH CORNER

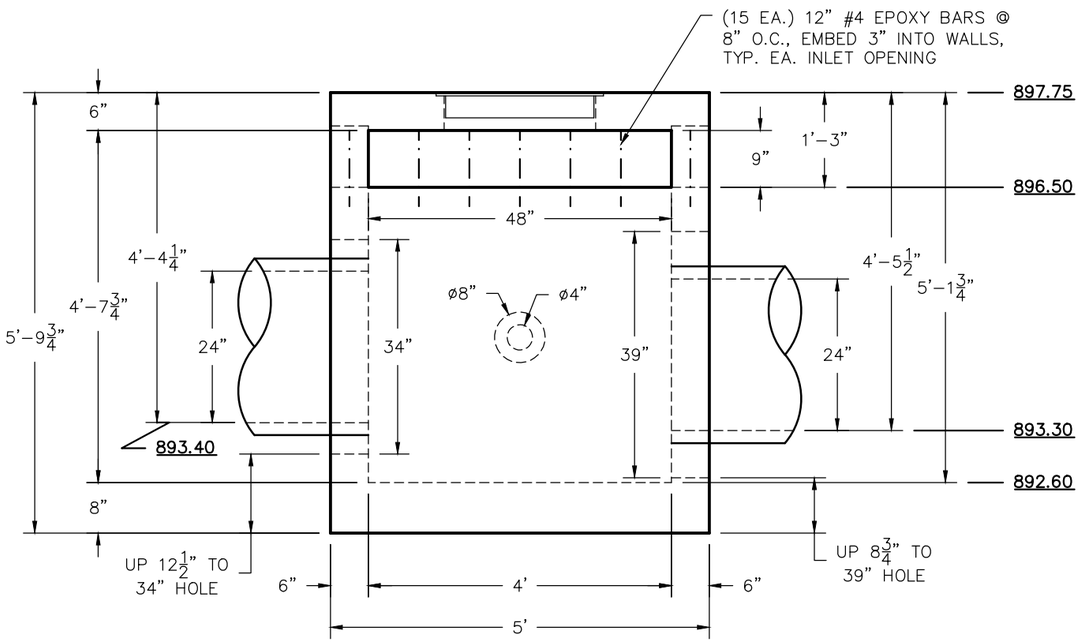

END VIEW

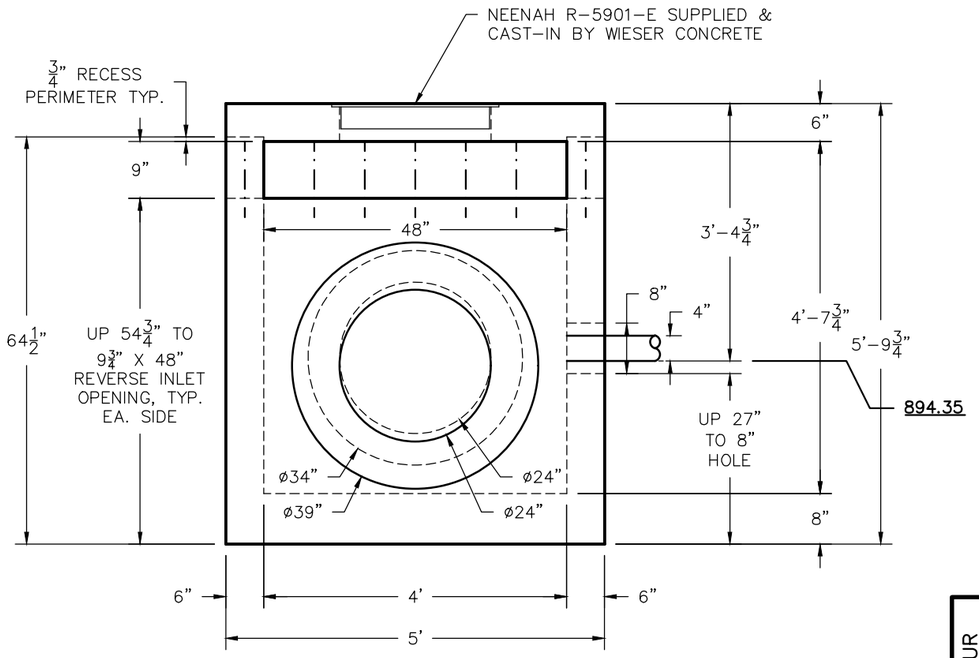

SIDE VIEW

PRE POUR

POST POUR

REV NO.	DATE:

SCALE: 1/2" = 1'-0"
DRAWN BY: BDK
DATE: 05/22/2024
FILE: i:\jobs cad\custom boxes\custom boxes 2024\jb holland - ames municipal electric system - ames, ia - 4x4, 5x7 leachate\jb holland - ames municipal electric system - ames, ia - 4x4, 5x7 leachate

WIESER CONCRETE
W3716 US HWY10. MAIDEN ROCK, WI 54750
800-325-8456

JB HOLLAND CONSTRUCITON
AMES MUNICIPAL ELECTRIC SYSTEM
LEACHATE RISER VAULT
AMES, IA
WIESER JOB# 24-117U

SHEET NO. 2 OF 2

Project: City of Ames Ash Pond Closure
SCS Project #: 27219356.02

Section: 33 12 00
Title: Submittal #S12C – Pumps, Operations and Maintenance Manual

Submittal Review

- [X] Conforms as submitted
- [ ] Conforms as noted – Resubmittal is:
  - [ ] Not required
  - [ ] Required
  - [ ] Noted portions only
  - [ ] For record only
- [ ] Does not conform
- [ ] Not required by contract documents
- [ ] For information only

Corrections or comments made on submittals during this review do not relieve the contractor from compliance with requirements of the drawings and specifications. This check is only for review of general conformance with the design concept of the project and general compliance with the information given in the contract documents. The contractor is responsible for; confirming and correlating all quantities and dimensions; selecting fabrication processes and techniques of construction; coordinating contractor's work with that of all other trades; and performing contractor's work in a safe and satisfactory manner.

Comments:

Reviewed By: Matt Kuhlenengel	Date: 6/18/2025
SCS QC Review By: Marty Sturzl	Date: 6/19/2025

G:\Project\27219356.02\Data and Calculations\CQA Documents\Submittals\S12 - Pumps\SCS Review 12C-Pumps_250618.docx

SHOP DRAWING TRANSMITTAL

DATE: 5/30/2025

Project: Ames Ash Pond Closure & RDF Ash Pond Construction

Specification Section Number: 33 12 00 Contact Water Pumping System

Transmittal Number: 12C

1st Submittal _____ or Resubmital _____

Contract Item	Description of Material	Manufacturer	Drawing or Data No.	Action Taken
12	Pumps and components	Multiple		
	O&M manual			

As stated in the Contract Documents, the undersigned CONTRACTOR's submission of these Shop Drawings or samples shall constitute a representative to the OWNER and the ENGINEER that the CONTRACTOR has either determined and verified all quantities, dimensions, field construction criteria, materials, catalogue numbers and similar data or he assumes full responsibility for doing so, and that he has reviewed and coordinated each Shop Drawing or sample with the requirements of the work and the Contract Documents and he represents to the OWNER and the ENGINEER that item(s) described by these Shop Drawings do comply with the requirements of the Contract Documents. The undersigned Contractor certifies that the equipment included in this submittal complies with the latest requirements of the Occupational Health and Safety Act of 1970 including any standards or regulations established by the U.S. Secretary of Labor in administration of said act, and the Iowa Occupational Safety and Health Statutes.

5/30/2025

Supplier/Subcontractor: EPG - Supplier

(Autorized Signature of Contractor) **(Date)**

JB Holland Construction, Inc.

2191 State Hwy 52, Decorah, IA 52101

FOR ENGINEER'S USE

n as designated above in accordance with the following legend:

A- No Exception Taken
B- Make Corrections Noted & Resubmit
C- Revise & Resubmit
D- Rejected
E- Submit Specified Item

BY: _____

DATE: _____

EPG Companies Inc.

Operations & Maintenance Manual

FOR

City of Ames
Ash Pond

EPG Job# S42383

EPG Companies Inc.

Operations and Maintenance Manual Index

City of Ames Ash Pond

EPG Job# S42383

Bulletin	1055	List of Equipment
Drawing	09948-0000	Series 7 SurePump™
Drawing	09948-0010	Series 7 Size 5 Sump Drainer
Bulletin	2335a	EPG SurePump™ Wheeled Sump Drainer
Form	117	Attachment to 2335a
Bulletin	0480g	Materials of Construction
Bulletin	0130c	EPG Sump Drainer Vent Tube / Check Valve Installation Instructions
Bulletin	0680a	EPG SurePump™ WSDPT with LevelMaster™ Level Sensor Disassembly / Assembly Operation & Maintenance Instructions
Bulletin	0691a	EPG SurePump™ with LevelMaster™ Level Sensor Replacement Instructions for Level Sensor in Wheeled Sump Drainer
Bulletin	3360	Caution – Submersible Level Sensors
Bulletin	0124	Engineer's Specification EPG LevelMaster™ EP Submersible Level Sensor
Bulletin	0690c	EPG LevelMaster™ Level Sensor Operation & Maintenance Instructions
Bulletin	0790	Test Equipment
Drawing	01774-0000	Vent Tube Assembly
Bulletin	0780a	Troubleshooting Guide
Bulletin	6090b	Wire Cable Clamp Installation Instructions
Bulletin	0370a	Storage Information
Bulletin	0380d	SurePump™ Installation Record
Bulletin	0202	SurePump Warranty Requirements
Form	200a	SurePump™ Installation Record
Bulletin	0610a	Installation Guide EPG SurePump™ Pumping System
Bulletin	0620c	Start Up Checklist EPG SurePump™ Pumping System
Bulletin	7620	EPG Series YCL925PT PumpMaster™ Controller
Form	117	Attachment to 7620
Drawing	13367-0250	Panel Schematic
Information	2 Pages	EPG Operator Control Station Pump Controller Default Setting
Bulletin	7625	EPG YCL Pump Controller Operation & Setup Instructions
Bulletin	8590	Operator Control Station – Quick Start Guide
Bulletin	8000b	EPG Controllers with Intrinsically Safe Circuit(s) Field Installation Instructions

© EPG Companies Inc. 2024

Drawing	09650-0000	BJBGE-100B Gas Effect Breakout Junction Box for Level Sensor
Drawing	03626-0500	BJBP500 Breakout Junction Box for Motor Lead
Bulletin	0285e	Model NW Stainless Steel Discharge Adapter for Leachate, Monitoring, and Remediation Piping Applications
Bulletin	0291d	Installation Instructions – NW Disconnect for Leachate, Monitoring, and Remediation Pumping Applications
Bulletin	3282	2” Combination Air Release Valve Model AVR200
Information	2 Pages	Badger M2000 Technical Brief
Information	56 Pages	Badger M2000 Manual
Information	2 Pages	Switch-Tek LO10 Data Sheet
Information	3 Pages	Tsurumi 50PUPUA2.4S SP with floats
Photo	A	Front Panel Layout
Photo	B	Inner Door Layout
Photo	C	Back of Inner Door Layout
Photo	D	Back Panel Layout
Bulletin	2236	Extended Limited Warranty

 © EPG Companies Inc. 2024

EPG Companies Inc.

List of Equipment

City of Ames Ash Pond

EPG Job# S42383

1 YCL925PT
EPG PumpMaster Control Panel, UL listed, 230V, 3Ø, NEMA 4 enclosure, to operate a 1/2 HP submersible pump motor with Operator Control Station (OCS) and simulator, elapsed time meter, and cycle counter, flow and flow total a Pump Run LED panel mounted light the following alarms have panel mounted red LED lights: Overload, High sump level, high level, low level sump, leak detect, alarm reset, tank full alarm with passalong, remote pump disable. Includes Blue Top Mounted high-high alarm strobe, 20 Amp remote GFCI outlet, heat trac circuit, 5VA transformer, Lockable Enclosure is Rated NEMA 4

1 WPZ00701005C1044OX
WSDPT 7-1, 4" wheeled sump drainer, 0.5 HP, 230 V, 3PH, 304SS
EPG WSDPT 7-1 Sure Pump patented, 4" Wheeled, 304 SS stainless Steel Sump Drainer with 1/2 HP. 230 VAC, 3 phase submersible motor. Includes: 50' of 14 AWG Jacketed motor lead, LT05X50P level Transducer with 50' of jacketed cable and 50' of 1/4" stainless steel suspension cable with SS clamps, drilled check valve, includes a 1/2" FNMPT to 2" MNPT Stainless steel reducer.

1 BJBGE-100B
Gas Effect Breakout Junction Box, rated leak tight at 100" of water column (positive or negative). Includes SureSeal connectors, 3/4" & 1" Myers hub, transducer cable clamp, desiccant dryer, bellows, enclosure is NEMA 4 powder coated steel.

1 BJBP500
EPG Breakout Box. NEMA 4X non-metallic enclosure for 1 ea. motor lead, with SureSeal connectors.

1 MAGM20002 DB
Badger 2" Mag Meter, Model M-2000, Flanged ends, with Modbus Daughter Board, 2" CS Body 150# Flanged with: PTFE Liner, Alloy C Electrodes, 316SS Grounding Rings, Remote Amplifier, NEMA 6P/IP67 Submersible, and 30' Cable.

1 ST-LO10
Optical Leak Detection Switch, Teflon body with 25' lead.

© EPG Companies Inc. 2023

1	NW2SS EPG Discharge Adapter, 2", cast 316SS disconnect.
1	AVR200 Air Release Valve, 2" FNPT, combination air and vacuum.
1	50PUA2.24S Pump, Tsurumi PU Series, 1/2 HP Tsurumi stainless steel sump pump with 1/2 HP, 115/230 VAC, 1 phase motor. Includes 32' of motor lead, 2" discharge, and (2) floats.

 © EPG Companies Inc. 2023

Series 7 SurePump ™

Flow Range 20-50 GPM

60 Hz

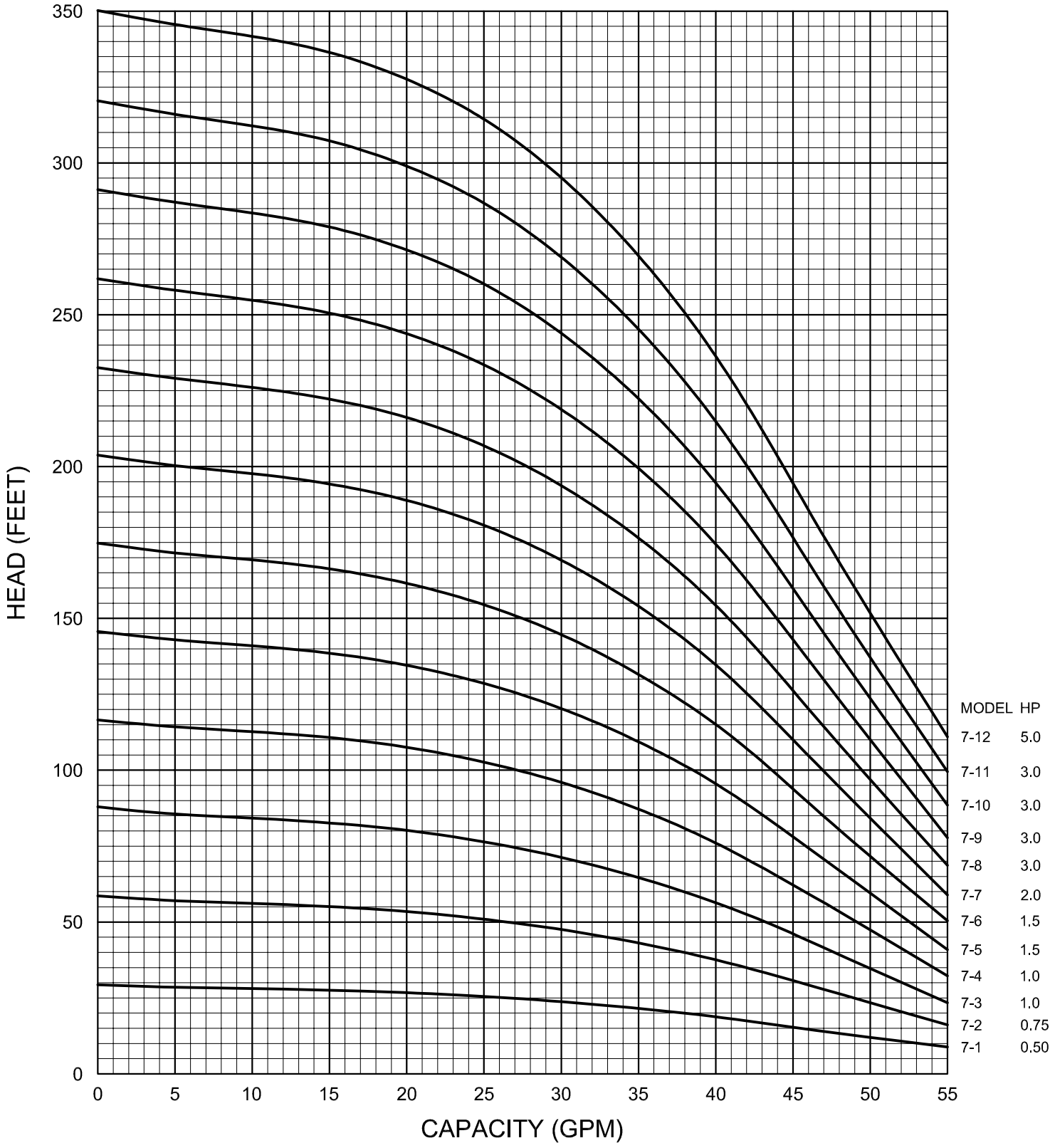

SPECIFICATIONS SUBJECT TO CHANGE WITHOUT NOTICE

SERIES 7 SIZE 4 SUMP DRAINER

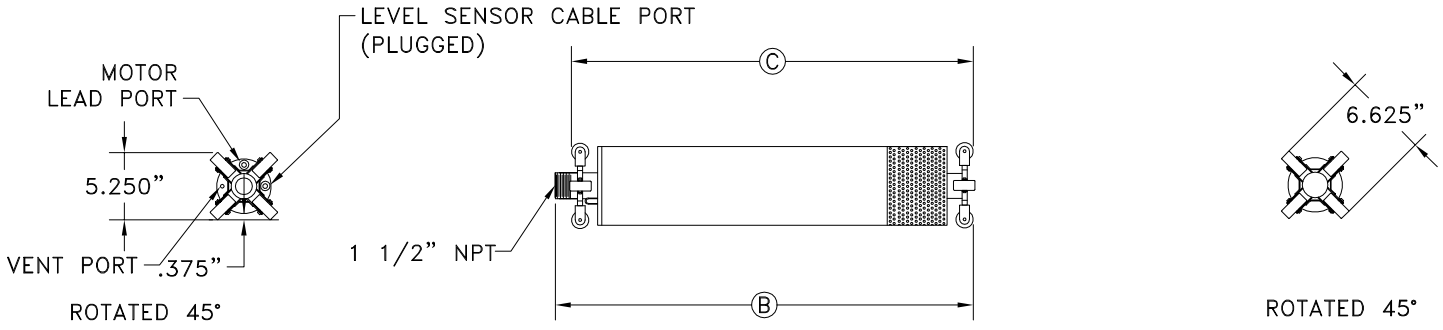

WSD

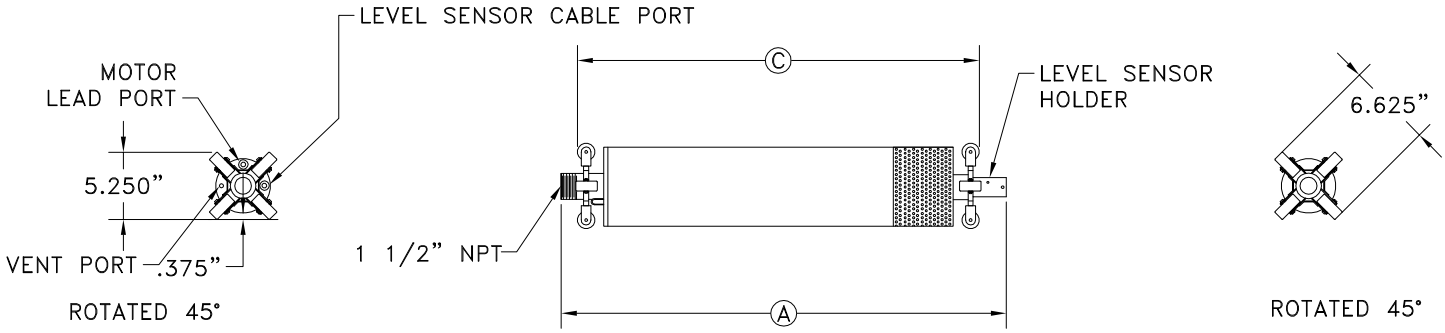

WSDPT

MODEL	HP	PHASE	A	B	C	*APPROX. SHIPPING WEIGHT	
						WSD	WSDPT
7-1	0.50	1	32.66	31.54	30.79	62.79	67.79
7-1	0.50	3	32.66	31.54	30.79	62.79	67.79
7-2	0.75	1	35.76	34.64	33.89	68.95	68.95
7-2	0.75	3	35.76	34.64	33.89	68.95	68.95
7-3	1.00	1	38.82	37.70	36.95	75.08	80.08
7-3	1.00	3	38.82	37.70	36.95	75.08	80.08
7-4	1.00	1	40.79	39.67	38.92	77.36	82.36
7-4	1.00	3	40.79	39.67	38.92	77.36	82.36
7-5	1.50	1	44.64	43.52	42.77	86.09	91.09
7-5	1.50	3	42.77	41.65	40.90	79.64	84.64
7-6	1.50	1	46.60	45.48	44.73	92.53	97.53
7-6	1.50	3	44.70	43.58	42.83	88.37	93.37

MODEL	HP	PHASE	A	B	C	*APPROX. SHIPPING WEIGHT	
						WSD	WSDPT
7-7	2.00	1	50.06	48.94	48.19	94.81	99.81
7-7	2.00	3	48.56	47.44	46.69	90.65	95.65
7-8	3.00	1	60.13	59.01	58.23	126.69	131.69
7-8	3.00	3	57.13	56.01	55.23	113.36	118.36
7-9	3.00	1	62.10	60.98	60.23	128.97	133.97
7-9	3.00	3	59.10	57.98	57.23	115.64	120.64
7-10	3.00	1	64.07	62.95	62.20	150.91	155.91
7-10	3.00	3	61.07	59.95	59.20	131.25	136.25
7-11	3.00	1	66.04	64.92	64.17	153.19	158.19
7-11	3.00	3	63.04	61.92	61.17	133.53	138.53
7-12	5.00	1	74.01	72.89	72.14	155.47	160.47
7-12	5.00	3	68.01	66.89	66.14	135.81	140.81

NOTE: ALL DIMENSIONS ARE IN INCHES.

*SHIPPING WEIGHT INCLUDES
WSD: CRATE, 50' OF 14-4 MOTOR LEAD, 50' OF 1/8" SS CABLE.
WSDPT: CRATE, 50' OF 14-4 MOTOR LEAD, 50' OF 1/8" SS CABLE, LEVEL SENSOR AND CABLE.

ENGINEER'S SPECIFICATION

EPG WSDPT SurePump™ Wheeled Sump Drainer

for side slope riser installations with built-in level sensor & drilled check valve

Furnish _1_ centrifugal submersible EPG WSDPT SurePump Wheeled Sump Drainer(s) (U.S. patented), Model WSDPT _7_ - _1_ with _1_ impeller stages. Each unit shall be suitable for side slope riser installation. Each unit shall be equipped with a _1/2_ HP, submersible electric motor for operation on _230_ Volts, _3_ phase, 60 Hertz service with _50_ feet of power cable. Each SurePump Wheeled Sump Drainer shall have a _1½_ inch MNPT threaded discharge nozzle and be capable of delivering _35_ GPM at _22_ feet of TDH. Each SurePump will be fitted with _50_ feet of stainless steel lifting cable of sufficient strength to permit removal of the unit.

DESIGN
Each SurePump Wheeled Sump Drainer shall be capable of pumping contaminated ground water for spill recovery, leachate, and condensate removal. A removable transmitter and mount (patent pending) shall be installed at the center bottom of the Sump Drainer for liquid level control. The stainless steel Sump Drainer shall permit the unit to "pump down" to within _8_ inches of the sump bottom without any loss of performance or damage to the pump. External “priming” shall not be required nor allowed. The Sump Drainer shall be sealed with fluid inlet only at bottom and be equipped with a vent valve to assist with the evacuation of air from the Sump Drainer.

MATERIALS
Major components shall be made of 304 stainless steel, seal rings are to be made of E-Glide™, and bearings are to be E-Glide. In addition, all fasteners shall be 304 stainless steel. Teflon or rubber bearings and seal rings are not allowed.

CHECK VALVE
Each unit shall include a built-in check valve with non-metallic seat, and housing and disc of 304 stainless steel with factory drilled drain back weep hole.

SHAFT
The shaft shall be of 304 stainless steel and rotate on E-Glide bearings that are fluid lubricated.

DIFFUSER CHAMBER
The diffuser chambers for each impeller shall be 304 stainless steel and fitted with E-Glide impeller seal rings.

IMPELLERS
The impeller(s) shall be closed and consist of 304 stainless steel.

SUMP DRAINER
The sump drainer shall be fabricated from 304 stainless steel with sealed top, sealed around motor lead and level sensor cable. Shall have fluid entrance only below the bottom of the motor to promote cooling. Shall have multiple wheels on each end. Shall have the level sensor mounted at the bottom central axis.

MOTOR
The motor shall be a submersible, hermetically sealed motor. The motor shall be designed for continuous duty, capable of sustaining up to _100_ starts per day. The motor shall be connected to the pump via a motor adaptor and coupling in 304 stainless steel. Single phase motors in ½ HP to 1 HP only shall have thermal protection in the motor windings to protect the windings from overload. The unit will restart automatically after the motor cools down. Larger horsepower single phase motors and three phase motors shall have thermal protection located in the control panel that is manually reset.

© 2024 EPG Companies Inc.
SurePump & E-Glide are Reg. TM of EPG Companies Inc.

MOTOR LEAD WIRE

The lead wire shall be no-splice with EPG's "CP" waterproof and chemically resistant jacket over 600 Volt insulation and be of the length specified. Wire shall be sized for amp load of the motor.

© 2024 EPG Companies Inc.
SurePump & E-Glide are Reg.
TM of EPG Companies Inc.

ATTACHMENT TO BULLETIN 2335a

ENGINEER'S SPECIFICATION
EPG WSDPT SurePump™ Wheeled Sump Drainer
for side slope riser installations with
built-in level sensor & drilled check valve

EPG Job# S42383

This sump drainer includes the following optional feature:

- 1-1/2" FNMPT to 2" MNPT Stainless Steel reducer

Materials of Construction

EPG SurePump™

	STANDARD
Check Valve Housing	304 Stainless Steel
Check Valve	304 Stainless Steel
Check Valve Seat	E-Glide™
Diffuser Chamber	304 Stainless Steel
Impeller Seal Ring	E-Glide™
Impeller	304 Stainless Steel
Motor Adapter	304 Stainless Steel
Inlet Screen	304 Stainless Steel
Pump Shaft	304/314 Stainless Steel
Coupling	329/420/431 Stainless Steel
Fasteners	304 Stainless Steel
Bearings	E-Glide™

FRANKLIN ELECTRIC MOTORS

	1/3 to 2 HORSEPOWER	3 to 60 HORSEPOWER
End Bell Castings	304 Stainless Steel over Iron	304 Stainless Steel over Iron
Stator Shell	301 Stainless Steel	301 Stainless Steel
Shaft Extension	303 Stainless Steel	303 Stainless steel
Fasteners	316 Stainless Steel	300 Stainless Steel
Seal Cover	Tefzel	Sintered Bronze
Shaft Seal	Viton	Viton, Carbon, Ceramic Face Seal
Diaphragm	Viton	Nitrile Rubber
Diaphragm Plate	304 Stainless Steel	304 Stainless Steel
Diaphragm Spring	302 Stainless Steel	302 Stainless Steel
Diaphragm Cover	316 Stainless Steel	304 Stainless Steel
Slinger	Viton	Nitrile Rubber
Lead Sleeve	316 Stainless Steel	316 Stainless Steel
Lead Jam Nut	316 Stainless Steel	N/A
Lead Jam Clamp	N/A	300 Stainless Steel
Lead Potting	Epoxy	Epoxy
Lead Bushing	Viton	Viton

© 2024 EPG Companies Inc.
SurePump is a Reg. TM of EPG Companies Inc.

EPG Sump Drainer Vent Tube / Check Valve INSTALLATION INSTRUCTIONS

EPG's patented sump drainer* enables a submersible pump to pump down and restart in applications that would normally cause the pump to air lock.

Critical to the operation of the sump drainer is the installation of the vent tube and air check valve. The vent tube / check valve assembly has two functions. First, as the sump drainer fills with fluid the vent tube assembly allows air trapped inside of the sump drainer to escape, allowing the sump drainer to completely fill with fluid. When the sump drainer pump starts the vent assembly then closes, allowing the pump to draw liquid through the screen at the opposite end of the sump drainer. The closed check valve enables the pump to continue pumping even though the fluid level in the sump is below the normal intake of the pump.

The vent tube may be tied off to the pump discharge line. The vent check valve will operate correctly even if submerged.

INSTALLATION

Refer to Figure 1 for help in completing this procedure.

1. Slip the free end of the plastic vent tube onto the adapter on the top of the sump drainer.

2. Verify the open end of the check valve is labeled "VAC".

3. As you lower the sump drainer into the sump, uncoil the vent tube and fasten it to the discharge pipe. We recommend you keep the check valve above the fluid level. The check valve will work if it is submerged, but can foul with particles in the fluid.

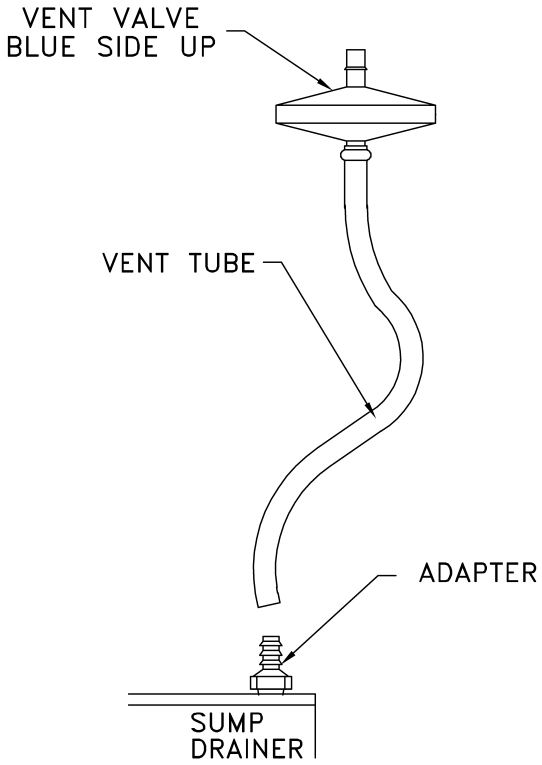

Figure 1. Vent Tube / Check Valve Assembly

* U.S. Patent #4,966,534 and 4,992,030

© 2024 EPG Companies Inc.

EPG SurePump™ with LevelMaster™ Level Sensor Disassembly / Assembly

OPERATION & MAINTENANCE INSTRUCTIONS

NOTE: Refer to Table B for list of tools needed for disassembly, assembly, and testing.

1. Place the pump on a suitable work surface with blocks to prevent the pump from rolling. Remove the vent tube by pulling straight out from the top. In cold weather it is better to unscrew the vent hose barb adaptor with tube attached rather than trying to pull the tube off the hose barb.

2. Unscrew the cord restraint nuts and pull inserts out about two (2) feet along the motor lead and level sensor lead. Loosen the insert from the wires so they are free to move through the cord restraint.

3. Mark the alignment of the tube and top (check for factory alignment marks). Center punch new marks in top and tube if factory marks cannot be found. The alignment marks will make reassembly easier.

4. Remove the four (4) cap screws that secure the tube to the top and carefully pull the top, with pump and motor attached, out of the tube. Do not hammer, pry, or pound on tube or top. Allow the sensor lead wire to slide through the cord restraint.

5. Remove the three (3) socket head setscrews from the level sensor housing on the bottom of the tube. Carefully pull the level sensor up and out from the bottom of the tube. Carefully remove the sensor lead wire by pulling the controller end back through the top. Cover the end of the sensor lead wire with tape to prevent moisture and dirt from entering. If the sensor is unused or put into storage, remove the dryer from the controller and install on end of vent tube during storage period.

6. Remove the nuts (4) that secure the motor to the pump and pull the motor from the pump. Do not remove the motor lead from the motor unless it will be replaced with a new lead. It is recommended that a new motor lead be used whenever the old lead is removed from the motor because of possible damage to the lead or distortion of the rubber seal that may prevent resealing.

7. Unscrew the motor lead nut from the motor. Work the lead back and forth to loosen seal and unplug the lead from the motor connector. Remove the lead by pulling the controller end back through the top.

8. Unscrew the pump assembly from the top using cloth strap wrenches to prevent damage to the metal surfaces.

CAUTION

Do not attempt to disassemble level sensor or pump motor. Any disassembly will void the warranty.

© 2024 EPG Companies Inc.
SurePump, LevelMaster, & PumpMaster are Reg. TM of EPG Companies Inc.

ASSEMBLY

1. Apply pipe sealing compound to the top threads and screw the pump to the top. To prevent damage to the top sealing surface or the pump bowls, tighten pump to top using cloth strap wrenches.

2. Slide motor and pump together and align motor shaft splines to pump splines by turning the motor shaft. Align the motor lead connector with the cutaway in the pump flange. Secure motor to pump with four (4) nuts.

3. Slide the long end of the motor lead through the cord restraint cap and nut in the top. Insert plug into the motor connector. Tighten motor lead connector nut to secure lead to motor.

4. Inspect upper and inside surface of tube and remove any sharp edges or burrs. Wipe surface of tube and top to remove any dirt, sand, or metal filings. Remove the O-ring and clean sealing groove in the top. If original O-ring installation used a spacer / shim between the top and O-ring, clean the shim and reinstall into the sealing groove in the top.

5. Carefully slide level sensor lead wire through the top cord restraint and nut.

> **CAUTION**
> Use care while handling the level sensor lead wire to prevent damage to the conductors and center vent tube.

6. Slide the level sensor and center it within the sensor housing at the bottom of the tube. Secure it with the three (3) socket head setscrews. To prevent damage to the sensor case, do not over tighten the setscrews.

7. Position the tube vertically and carefully slide the pump and motor assembly into the tube. Guide the assembly past the sensor lead wire to prevent crushing or cutting the lead wire. Remove slack from the sensor lead wire by pulling the lead wire out through the top.

8. Install a new top O-ring and liberally apply white petroleum jelly (Vaseline or equivalent) to the O-ring and cover sealing surfaces. Align the screw holes in the top with the holes in the tube and carefully slide the top into the tube making sure that the O-ring is not damaged.

9. Remove the slack from the motor lead and sensor lead wire. Secure the top to the tube with three (3) cap screws. Tighten cap screws until sealing grease starts to bead out from the top-to-tube joint. Do not over tighten.

10. Secure motor lead and sensor lead wire with the cord restraint nuts. Tighten the nut until the edge of the insert can be seen on the inside edge. Install vent hose.

© 2024 EPG Companies Inc.
SurePump, LevelMaster, & PumpMaster
are Reg. TM of EPG Companies Inc.

SEAL TEST PROCEDURE

NOTE: Refer to Figure 2.

1. Install mechanical plug into the discharge pipe connection located in pump top. Tighten to recommended specifications. Refer to Table A.

2. Connect gage tubing to vent fitting.

3. Connect magnehelic gage to gage tubing.

4. Fill five gallon pail with water to the rim.

5. Place pump assembly, as depicted on Figure 2, in the filled five gallon pail.

6. Observe the magnehelic gage. The pressure should read about 5" W.C. and hold steady.
   a. If the pressure holds steady, the pump is ready to be installed. Remove the gauge tubing and the mechanical plug.
   b. If the gauge pressure does not hold steady, there is an air leak in the top assembly.
      b.1. Remove the pump assembly from the five gallon pail and refill the pail with water.
      b.2. Mix a solution of soap and water in a hand pump spray application bottle and spray the top assembly.
      b.3. Place the pump assembly in the five gallon pail and observe the top assembly for bubbles to determine point of the seal leak.
      b.4. Make necessary adjustments to the pump assembly and repeat items b.1. through b.3. until the leak has been corrected and the gauge pressure holds steady.

INSTALLATION

1. Remove the gage tubing and the mechanical plug and install the vent tube with vent valve.

2. Run the level sensor lead wire to the PumpMaster™ control panel or breakout box and connect the sensor RED wire to the (-) terminal and BLACK wire to the (+) terminal. Connect the level sensor vent tube to the dryer and check for kinks and crushed areas in the tube connection area. The vent tube must be open to allow atmospheric pressure change compensation in the sensor.

3. Repeat bucket test to verify level sensor operation.

4. Install pump into place.

5. Check the level sensor readings before running pump. The LevelMaster meter should indicate the proper depth of the sensor when immersed in liquid. If the meter shows -34.7 the lead wires connections are reversed, not connected or damaged. Be certain to check correct voltages at the controller and measure the resistance of the motor lead and motor to assure proper wiring.

© 2024 EPG Companies Inc.
SurePump, LevelMaster, & PumpMaster are Reg. TM of EPG Companies Inc.

Table A

MECHANICAL PLUG SPECIFICATION

Nominal Pipe Size	Maximum Allowable Back Pressure PSIG		Tightening Torque
	Air	Water	
1"	5	110	20 in. lbs.
1.25"	5	100	30 in. lbs.
1.5"	5	70	5 ft. lbs.
2"	5	40	10 ft. lbs.
3"	5	30	12 ft. lbs.

Table B

TOOLS AND ITEMS REQUIRED FOR MAINTENANCE OF EPG SUREPUMP

* 0-32 Screw with 5/16" hex head
* 5/16" Nut driver
* 10-32 x 5/16" long stainless steel set screw
* 3/32" Allen wrench
* .0005" Shim stock (blue)
* O-ring set 4, 5, and 6
* White petroleum jelly (Vaseline)
* Anti-seize compound
* Small channel lock pliers
* Magnehelic gage (Model 2010)
* Scissors to cut shim stock
* Flat blade screwdriver
* 1/2" Open end wrench
* 24" of 1/4" OD nylon tubing
* Mechanical plug set -- 1", 1.25", 1.5", 2", and 3"
* Torque wrench

© 2024 EPG Companies Inc.
SurePump, LevelMaster, & PumpMaster are Reg. TM of EPG Companies Inc.

Figure 1

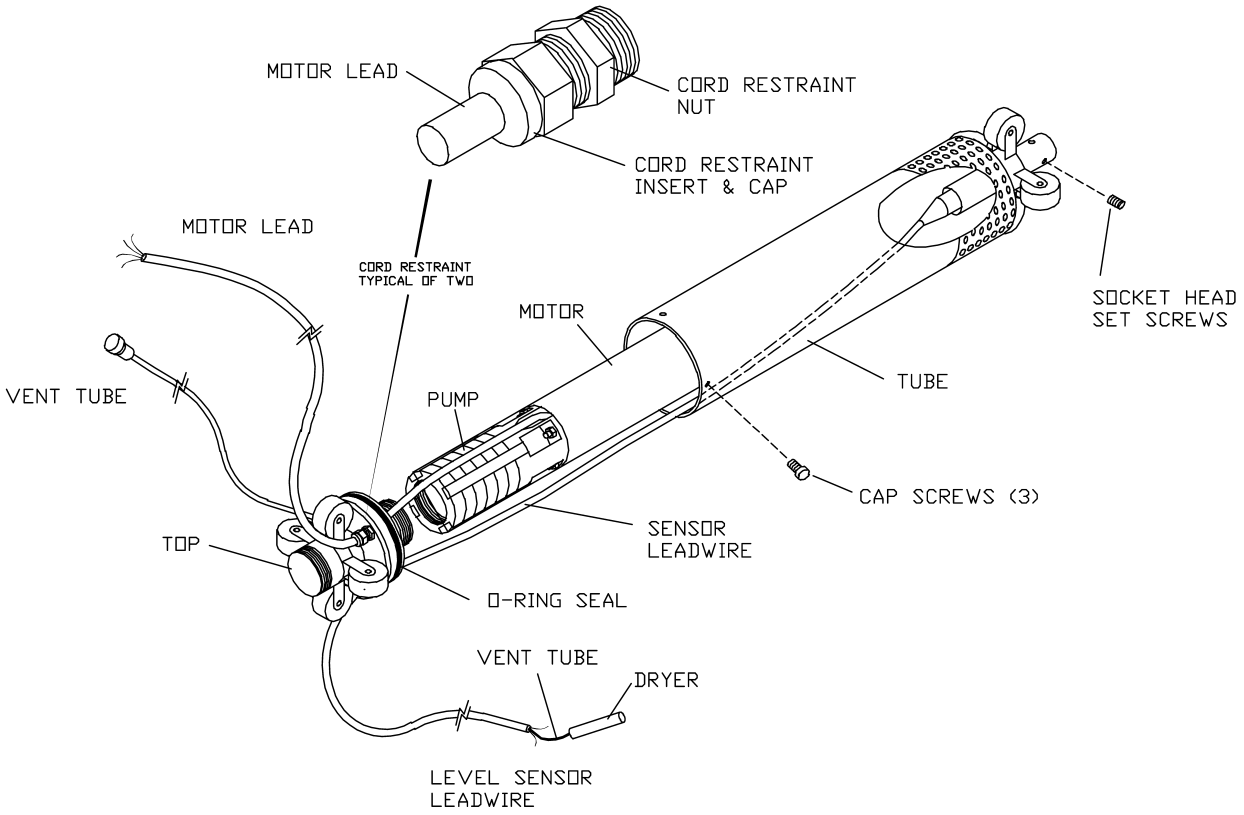

© 2024 EPG Companies Inc.
SurePump, LevelMaster, & PumpMaster are Reg. TM of EPG Companies Inc.

Figure 2

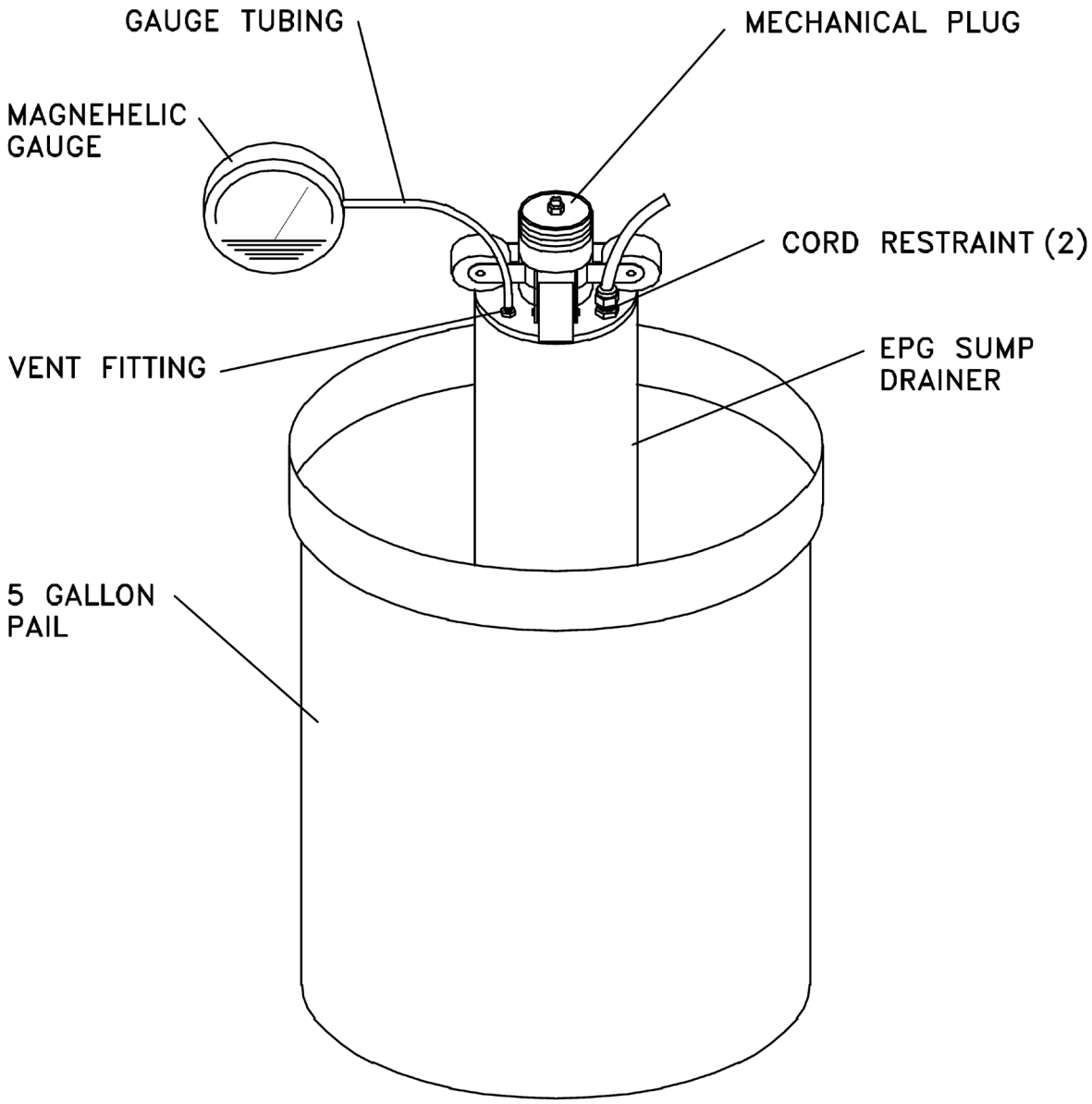

© 2024 EPG Companies Inc.
SurePump, LevelMaster, & PumpMaster are Reg. TM of EPG Companies Inc.

EPG SurePump™ with LevelMaster™ Level Sensor

REPLACEMENT INSTRUCTIONS FOR LEVEL SENSOR IN WSDPT

1. Use a 15/16 open end wrench to loosen and then remove the cord restraint nut (2).
2. Slide the cord restraint nut (2) and the grommet (3) off of the level sensor cable (1).
3. Use a 3/32" hex key to loosen the two setscrews from the locking collar.
4. Tie a string to the top end of the level sensor cable (1) and use electrician's tape to secure the string. Remove desiccant dryer from vent tube and close vent tube with tape.
5. Push several inches of the level sensor cable (1) into the sump drainer. Pull the level sensor holder (8) and the level sensor (6) out of the locking collar (5).
6. Pull the level sensor cable (1) through the sump drainer to a point where the electrician's tape can be removed.
   CAUTION: Do not pull the string through the sump drainer, it will be used to assist installation of the new level sensor.
7. Use the 3/32" hex key to loosen the setscrew (7) in the level sensor holder (8) and remove the level sensor.
8. Remove the string from the level sensor cable (1).
9. Remove the foam protective cover from the new level sensor.
10. Remove the desiccant dryer tube (9) and seal the vent tube with electrician's tape.
    CAUTION: The vent tube must have a dessicant dryer installed at all times or be sealed with electrician's tape. It is very important not to allow any dirt or moisture to enter the vent tube.
11. Place the new level sensor (6) in the level sensor holder (8). Secure the setscrew with the 3/32 hex key and torque to a maximum of seven-inch pounds.
    CAUTION: Do not over tighten the setscrew. Over tightening can damage the level sensor. Seven-inch pounds torque will secure the level sensor (6) in place.
12. Tie the string to the new level sensor cable end (1) and use electrician's tape to secure the string.
13. At the sump drainer's discharge end, pull the string and level sensor cable (1) through the sump drainer until the level sensor holder (8) is seated in the locking collar (5).
    CAUTION: Do not pull the cable tight. Allow two to three inches of slack in the sump drainer.
14. Insure the level sensor holder (8) is securely seated in the locking collar (5) and tighten the two setscrews (4). Torque to 15-inch pounds.
15. Remove the electrician's tape and string from the level sensor cable.
16. Reinstall the grommet (3) and the cord restraint nut (2). Tighten with the 15/16 open end wrench
17. Remove the tape from the vent tube and reinstall the dryer (9).

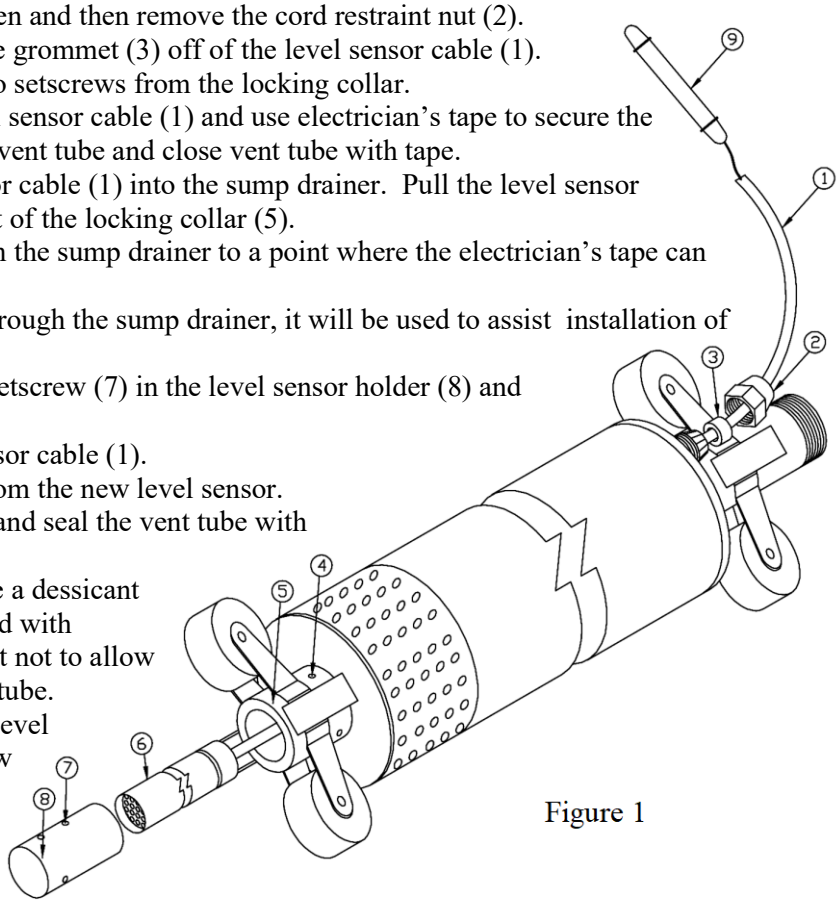

Figure 1

Tools/Equipment needed:

- 15/16 open end wrench
- 3/32 hex key
- Electrician's tape
- String-2 or 3 feet longer than sump drainer
- Torque wrench with inch pound scale

© 2024 EPG Companies Inc.
SurePump, LevelMaster, & PumpMaster are Reg. TM of EPG Companies Inc.

CAUTION

EPG submersible level sensors are designed for rugged use. However, care should be taken to protect these devices from over pressure and sudden impact. When lowering the level sensor into a liquid, penetrate the surface slowly and only to the depth that the unit is designed for. Do not drop or wash with high pressure since this may damage the unit.

© EPG Companies Inc. 2024

ENGINEER'S SPECIFICATION

EPG LevelMaster™ EP Submersible Level Sensor

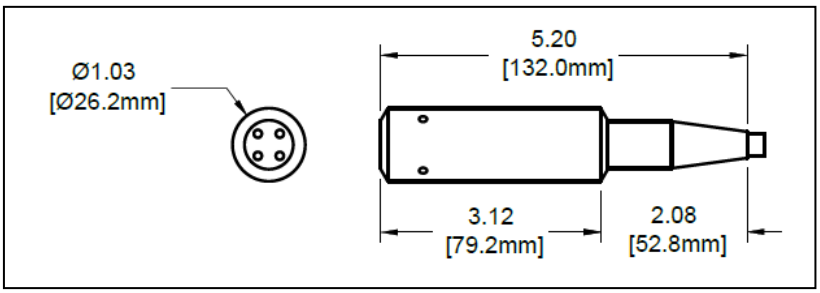

GENERAL FEATURES

* Application: The LevelMaster sensor is designed specifically to work with the EPG SurePump™, but its durability, accuracy and weight make it the logical choice for stand alone level applications. The chemical resistant jacketed cable with water block contains a vent tube for atmospheric pressure compensation.
* Ranges Available: 0-28" through 0-690' models are standard. Call EPG for other available ranges.
* Accuracy: The LevelMaster sensor has built-in temperature compensation as well as precise calibration giving an accuracy of ±0.25% at ambient temperature and a combined repeatability and hysteresis error of ±0.10%.
* Fully Submersible: The LevelMaster sensor is fully submersible in any liquid compatible with 316 stainless steel and the chemical resistant polyurethane cable jacket. It is designed for submergence at depths greater than 1.5X operating level without sustaining damage. Call EPG for more severe service.
* Superior Noise Immunity: Designed for heavy duty use in hostile environments, the LevelMaster sensor gives outstanding noise immunity. Unlike transducers, whose signals may be distorted by outside interference, the LevelMaster sensor utilizes a conditioned compensated 4-20 mA output to maximize signal strength and accuracy. The sensor also features a shielded lead to help prevent signal disruption from outside sources.

PERFORMANCE

* Depth Range:	0-28" thru 0-690' (0-1 PSI thru 0-300 PSI)
* Static Accuracy:	±0.25% FSO
* Thermal Error:	0.10% FSO/°C
* Resolution:	+0.0001% FS

ENVIRONMENTAL

* Compensated temp range:	0° to 50°C
* Operating temp range:	-20° to 60°C

© 2023 EPG Companies Inc.
LevelMaster & SurePump are
Reg. TM of EPG Companies Inc.

ELECTRICAL

* Excitation:	9 to 28 VDC, Red = (+) excitation, Black = (-) excitation
* Input Current:	20 mA maximum
* Output:	4-20 mA (2 wire)
* Zero offset (max):	4-20 mA, ±.25mA
* Output impedance:	<10 ohms
* Insulation resistance:	100 megohms at 50VDC
* Circuit protection:	Polarity, surge & shorted output
* Power supply rejection:	<±.05% FSO/VDC (mA output)
* Electrical termination:	2-22 AWG conductors in a shielded cable with sensor breather and polyurethane jacket

PHYSICAL

* Dimensions:	Nominal diameter of 1.03" X 5.2" length
* Weight:	7 oz. (not including cable)
* Cable:	Polyurethane jacketed shielded cable with polyethylene vent tube and Kevlar tension members (.05 lbs/ft)
* Wetted materials:	316 SS, Viton
* Mounting provision:	Suspended by cable

MODEL {Call EPG for other ranges available – specify length (---)}

PART #	DESCRIPTION	RANGE
EP05X---P	**Submersible Pressure Transmitter**	0-11'
EP07X---P	" " "	0-16'
EP10X---P	" " "	0-23'
EP15X---P	" " "	0-34'
EP20X---P	" " "	0-46'

OPTIONS

* Titanium Housing:	Used for highly corrosive environments (TI).
* Lightning Protection:	Protects against transient voltages and lightning associated surges up to 20,000 amperes (009).
* Temperature Sensor:	A sensor with 4-20 mA output for temperature (0-50ºC) is available (007). Excitation: 9-30 VDC, White = (+) excitation, Green = (-) excitation.
* Tefzel® Cable:	Recommended for use in highly corrosive environments. It offers additional resistance over standard polyurethane cable (TZ).
Part # Examples:	EP05X100TZ-009 (0-5 PSI, 100' of Tefzel cable, and lightning protection) EP10X250P-007 (0-10 PSI, 250' of polyurethane cable, and temperature sensor) EP05X100TZ/TI (0-5 PSI, 100' of Tefzel cable, and titanium housing)

© 2023 EPG Companies Inc.
LevelMaster & SurePump are
Reg. TM of EPG Companies Inc.

EPG LevelMaster™ Level Sensor

OPERATION & MAINTENANCE INSTRUCTIONS

Characteristics of the LevelMaster Level Sensor

EPG Companies Inc. LevelMaster level sensor is a submersible pressure transmitter. The pressure transmitter is a precision measurement devise that incorporates isolated diaphragm sensors that are specifically designed for use with hostile fluids and gases. The sensor utilizes a silicon pressure cell that has been fitted into a stainless steel package with a stainless steel barrier diaphragm. The sensor assembly is housed in a rugged 316 stainless steel case.

The device features a high performance internal signal conditioning. Standard output is 4 to 20 mA. All units have surge and reverse polarity protection.

All EPG transmitters are permanently etched with wiring information, part number (P/N), serial number (S/N), date of manufacture (DOM), range, excitation, and output.

All EPG transmitters are designed for rugged use. However, care should be taken to protect these devices from overpressure and sharp impact. When lowering submersible pressure transmitters into a liquid, penetrate the surface slowly and only to the depth necessary. Do not drop the unit from above the surface. All transmitters can be cleaned by rinsing them in mild detergent. Do not pressure wash.

Vent Filter / Water Vapor Trap

The vent filter and water vapor trap is a replaceable vent tube dehumidifier intended for use with the submersible pressure transmitters. This device is specifically designed to protect sensitive electronic components from mildew, corrosion, rust, and other forms of deterioration while at the same time preventing the formation of a liquid column.

Vent filters should be changed when they are 85% spent. Do not remove the old filter until a new one is available. The number one failure mode is moisture and corrosion damage due to lack of maintenance of the vent filter. The vent filter connects to the existing vent tube as it exits the cable at the junction box via a tube.

Replacement vent filters can be ordered by calling EPG at 800-443-7426. The vent filter and water vapor trap can be exposed to air, industrial gases, refrigerants, organic liquids, and solvents. However, they should not be used when ammonia is present.

Specifications

Most installations of submersible pressure transmitters connect the cable directly to the control panel or to a breakout box (junction box). From this breakout box, end users must run cable to the required instrumentation. Specifications for the polyurethane or Tefzel jacketed cable is as follows:

© 2024 EPG Companies Inc.
LevelMaster is a Reg. TM of EPG Companies Inc.

* Excitation:	10 to 40 VDC, Red = (+) excitation, Black = (-) excitation
* Input Current:	20 mA maximum
* Output:	4-20 mA (2 wire)
* Zero offset (max):	4-20 mA, ±.12mA
* Output impedance:	<10 ohms
* Insulation resistance:	100 megohms at 50VDC
* Circuit protection:	Polarity, surge & shorted output
* Power supply rejection:	<±.05% FSO/VDC (mA output)
* Electrical termination:	2-24 AWG conductors in a shielded cable with sensor breather, water block, and polyurethane jacket
* Compensated temp range:	0° to 50°C
* Operating temp range:	-20° to 70°C
* Dimensions:	Nominal diameter of 1.0" X 4.15" length
* Weight:	7 oz. (not including cable)
* Cable:	Polyurethane jacketed shielded cable with polyethylene vent tube and Kevlar tension members
* Wetted materials:	316 SS, Viton
* Mounting provision:	Suspended by cable

Polyurethane Cable

The standard cable is polyurethane and will handle most environments and has a self-sealing feature. If a cut occurs in the outer jacket of the cable, a water block feature below the outer jacket will self-seal in most cases to guard against the incursion of water.

Chemical Resistance of Polyurethane

Potable Water, Waste Water, Borax, Butane, Animal Fat, Carbonic Acid, Citric Acid, Cod Liver Oil, Corn Oil, Glycerin, Glycol, Mineral Oils, Potassium Nitrate, Potassium Sulfate, Silicone Oils, Stoddard Solvent, Tannic Acid (10), Tartaric Acid, Turbine Oil, and most Leachate.

Tefzel® Cable

Optional Tefzel cable is recommended for use in highly corrosive environments. It offers additional resistance in corrosive environments over the standard polyurethane cable.

Chemical Resistance of Tefzel

Acetic Acid (Glacial), Acetic Anhydride, Acetone, Aluminum Chloride, Anti-Freeze, Bromine, Calcium Chloride, Calcium Hydroxide, Chlorine, Copper Chloride, Ferrous Chloride, Hydrochloric Acid, Ketones, Lacquer Thinners, Leachate, and Sulfuric Acid.

© 2024 EPG Companies Inc.
LevelMaster is a Reg. TM of EPG Companies Inc.

Cable Lengths

The maximum length of cable to be used with the submersible pressure transmitter is up to 10,000 feet.

OPTIONS

* Titanium Housing:	Used for highly corrosive environments
* Lightning Protection:	Protects against transient voltages and lightning associated surges up to 20,000 amperes
* Temperature Sensor:	A sensor with 4-20 mA output for temperature (0-50ºC) is available – Excitation: 9-30 VDC, White = (+) excitation, Green = (-) excitation.

© 2024 EPG Companies Inc.
LevelMaster is a Reg. TM
of EPG Companies Inc.

TEST EQUIPMENT

To insure proper installation, EPG recommends the following instruments. When working with electrical circuits, use caution to avoid electrical shock.

Megohmmeter:	To measure insulation value of motor and motor leads to ground. The higher the reading, the better.
Ohmmeter:	(Must be able to read less than 1 ohm) To measure resistance winding to winding in motor, check quality of any connections made in motor circuit to test coils of relays and continuity of circuits.
Volt Meter:	To verify correct supply voltage and measure system requirements when running.
Clamp on Amp Meter:	To measure current draw in system.

© 2024 EPG Companies Inc.

VENT TUBE ASSEMBLY

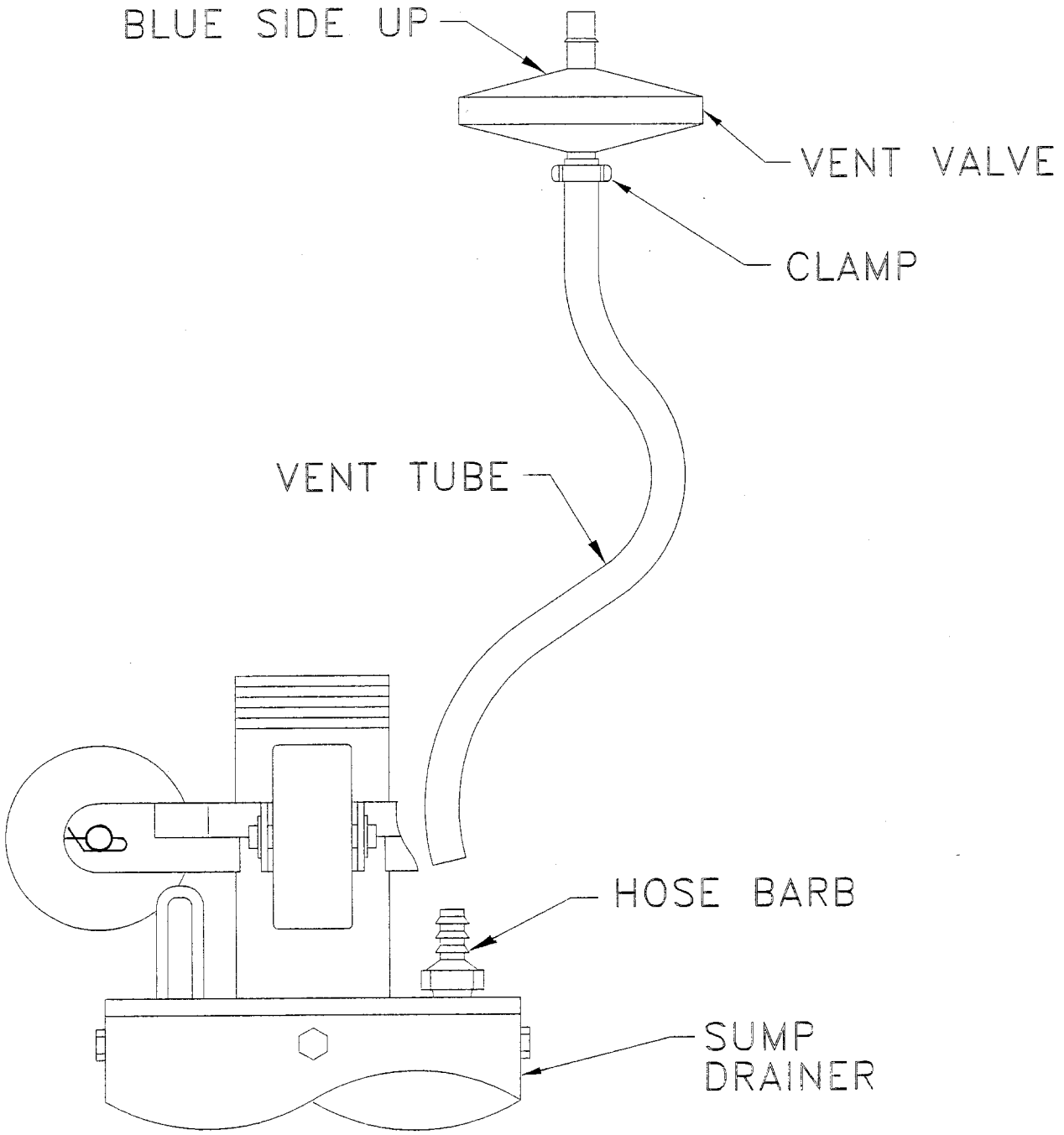

TROUBLESHOOTING GUIDE

FAULT	POSSIBLE CAUSE	HOW TO CHECK	HOW TO CORRECT
Pump or blower does not run.	No electricity at controller.	Check for voltage at controller.	If no voltage at controller, check for cause. Contact power company if voltage is incorrect.
	Fuses are blown or circuit breakers are tripped.	Check fuses for correct size and check for loose, dirty, or corroded connections in fuse receptacle, terminal strip and at splice points.	Replace with proper fuse or reset circuit breaker. If new fuses blow or circuit breaker trips, the electrical installation, motor and leads must be checked.
	Motor starter overloads have tripped out.	Check for voltage on line and load side of starter. Check megohm value of motor and lead.	Reset heaters or replace. Inspect starter for other damage. If heater trips again, check the supply voltage. Replace motor or lead as needed.
	Motor and/or cable are defective.	Turn off voltage, disconnect drop leads from controller to the motor. Measure the lead-to-lead resistances with ohmeter (RX-1). Measure lead-to-ground values with megohm meter. Record measured values.	If open winding or ground is found, remove pump and recheck values at the surface. Repair or replace motor or cable.

 © 2024 EPG Companies Inc.

FAULT	POSSIBLE CAUSE	HOW TO CHECK	HOW TO CORRECT
	Starter does not energize.	Energize control circuit and check for voltage at the holding coil.	If no voltage, check control circuit. If voltage, check holding coil for shorts. Replace bad coil.
	Defective controls.	Check all sensors and safety switches for operation. Inspect contact in control devices.	Replace worn or defective parts.
	Defective capacitor. (Single phase only.)	Turn off voltage, discharge capacitor. Check with megohm meter. Record measured values.	Replace if defective.
Pump runs but does not deliver liquid.	Liquid level in sump is too low or sump infiltration rate is reduced or intranded gas.	Check sump draw down.	See pump data sheet for minimum submergence values.
	Vent valve not installed or improperly installed.	Make sure valve is attached to the to of the sump drainer and that it is not installed backward.	Replace valve if missing. Reverse valve if installed upside down.
	Inlet strainer is clogged.	Install pressure gauge, start pump, gradually close the discharge valve and read pressure at shutoff.	Remove pump and inspect for blockage. Clean screen as needed. Inspect check valve for blockage. Rinse out pump and reinstall.

 © 2024 EPG Companies Inc.

FAULT	POSSIBLE CAUSE	HOW TO CHECK	HOW TO CORRECT
	Pump is defective or worn.	Same as description above.	Convert PSI to feet (PSI x 2.31 ft/PSI = ___ ft.), add elevation from pressure gauge to liquid level to the converted pressure reading. Refer to specific pump curve for shutoff head for that pump model. If calculated value is close to curve, pump is probably OK. If not, remove pump & inspect.
Pump runs continuously.	Leak in system.	Check system for leaks.	Replace damaged pipes or repair leaks.
	Worn pump.	Install pressure gauge, start pump, gradually close the discharge valve and read pressure at shut-off.	Pull pump and inspect. Replace worn impellers, bearings or other close fitting parts.
	Loose or broken motor shaft.	Little or no liquid will be delivered if the pump/motor coupling is loose or if the motor shaft has sheared off.	Check for damaged shafts if coupling is loose and replace worn or defective units.
	Pump intake or impellers blocked.	Restricted flow may indicate a clogged intake screen or partially blocked impellers. Pump may be installed in mud or sand.	Clean screen and reset pump. It may be necessary to clean impellers.

 © 2024 EPG Companies Inc.

FAULT	POSSIBLE CAUSE	HOW TO CHECK	HOW TO CORRECT
Pump runs but at reduced capacity.	Wrong rotation.	Check for proper electrical connection in control box.	Correct wiring and change leads as required.
	Leak in system.	Check system for leaks.	Replace damaged pipes or repair leaks.
	Pump strainer or check valve is clogged.	Remove pump and inspect.	Clean, repair, rinse out and re-install pump. It may be necessary to take pump apart and clean impellers. Check discharge line for any obstructions.

 © 2024 EPG Companies Inc.

Wire Cable Clamp/Clip

INSTALLATION INSTRUCTIONS

Recommended Method of Applying Clamps to get Maximum Holding Power

1. *Turn back* the specified amount of cable from the loop. Apply the first clamp/clip one base width from the dead end of the wire cable (U-bolt over dead end - live end rests in clamp saddle). Tighten nuts evenly to recommended torque.
2. *Apply the next clamp* as near the loop as possible. Turn on nuts firm, take up rope slack, and tighten nuts evenly to recommended torque.
3. Do not use clamps on plastic coated wire rope.
4. Never use clamps to connect two straight lengths of wire rope.

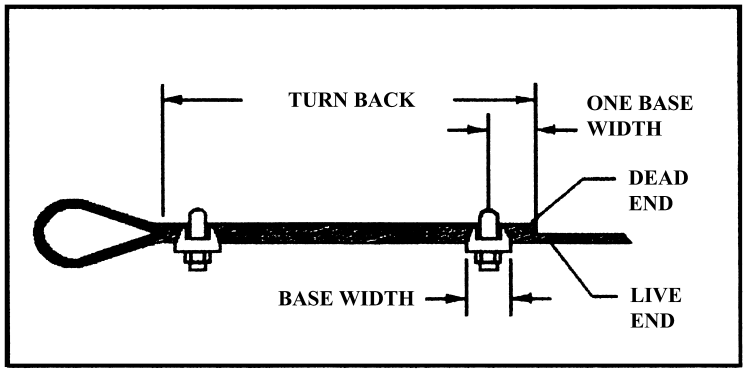

Attaching Clamps

A termination made in accordance with instruction and using the number of clamps shown has an approximate 80% efficiency rating. This rating is based upon the catalog breaking strength of wire cable/rope.

The clamps should be attached to the cable ends as shown, with the base of the clamp against the live or long end, and the U-bolt bearing against the dead or short end of the cable. This is the only correct method of attaching wire-cable clamps.

The clamps should be spaced at least six cable diameters apart to insure maximum holding power. After the cable has been placed in service and is under tension, the nuts should be tightend again to compensate for any decrease in cable diameter caused by the load.

Number of Clamps Recommended (316SS Cable)

Clamp Size Inches	Minimum No. of Clamps	Amount of Cable to Turn Back in Inches	Breaking Strength FT/LBS	Clamp Torque FT/LBS	Cable Strength with Clamps LBS*
1/8	2	3 1/4	1,680	4.5	675
3/16	2	3 3/4	3,560	7.5	1,450
1/4	2	4 3/4	5,880	15	2,350
5/16	2	5 1/4	8,800	30	3,550
3/8	3	6 1/2	11,700	45	4,680

**Note: At 50% safety factor, not for overhead lifting.*

© 2024 EPG Companies Inc.

STORAGE INFORMATION

SUREPUMP™

1. The ideal storage condition for SurePump is in a warm dry location. Although SurePump will tolerate a light freeze, temperatures should not fall below -3°C (27°F). Repeated freezing and thawing should be avoided to prevent possible loss of motor fluid.

2. Limit storage time to less than two years if storage area temperatures exceed 100°F. Limit storage time to one year or less if storage area temperatures exceed 130°F.

3. To prevent motor seal damage and/or fluid loss, always store SurePump vertically.

LEVELMASTER™

1. IMPORTANT: During any short or long term storage, to prevent moisture damage to internal components, the desiccant dryer must be installed on the vent tube of the submersible level sensor signal cable. Store in a warm dry location to prevent internal condensation in the meter enclosure.

2. If the level sensor is installed in a SurePump, pump must be stored in a vertical position. Coil the sensor signal cable and place in a box or protected area to prevent damage to the signal cable. Do not stack heavy items on top of level sensor signal cable.

3. Make certain that the desiccant dryer is attached to the end of the level sensor vent tube. Inspect dryer periodically and replace if crystals are pink or white.

PUMPMASTER™ CONTROLS

1. To prevent condensation/moisture damage within the control cabinet, store the PumpMaster in a warm dry location.

2. Check that the corrosion inhibitor cartridge is installed in the interior of the cabinet. If the PumpMaster control will be stored for over six months, contact EPG Companies Inc. for additional corrosion inhibitor cartridges

NOTE

The non-volatile memory of level and flow meters may deteriorate if left without power for periods greater than one year. If storage times are expected to exceed one year contact EPG Companies Inc. for special precautions.

© 2024 EPG Companies Inc.
PumpMaster, LevelMaster & SurePump are Reg. TM of EPG Companies Inc.

EPG Companies Inc.

SurePump™ Installation Record

Form Completed by: _____ Installation Date: _____

Company: _____ EPG Serial #: _____

PUMPS, CONTROLS AND POWER SUPPLY

Installer:	Address:	Installation Location:
Motor Model HP	Volts: Max Amps Rating:	Pump Model:
Power Supply Transformers: Number Used: KVA Each:	Hertz: Comments:	
Pump Control Panel: Mfg. & Model #:	Motor Starter Size:	Overload Heater Part or setting range: IEC Starters:
Lightning Arrestors: Mfg. & Model:	Surge Capacitors: Yes _____ No _____	Disconnect Fuse or Circuit Breaker Amp Rating:
Primary Flow Control Devices: (Low Level Control, Flow Control, Valve, System Back Pressure, etc.)		

OPERATING DATA (Measurements at Control Panel)

PUMP CONDITIONS: GPM	VOLTS	AMPS
Pump Not Running 0	R-Y _____ R-B _____ B-Y _____	
Open Discharge	R-Y _____ R-B _____ B-Y _____	R _____ Y _____ B _____
Normal Operation Run Time _____ Off Time _____	R-Y _____ R-B _____ B-Y _____	R _____ Y _____ B _____

© 2024 EPG Companies Inc.
PumpMaster, LevelMaster & SurePump are Reg. TM of EPG Companies Inc.

INSTALLATION DATA

Discharge Line Size:	Discharge Pressure:	Pump Submergence:	Fluid Temp: _____ºF _____ºC
External Check Valve Used?	Location:	Cable Length & Size:	Ground Resistance
Insulation Megohm Readings:	Before Installation:	After Installation:	After 30 min. Run:

SENSORS

Type of Level Sensor: Pressure Transmitter _____ Load Monitor _____ Floats _____ Other _____	Transmitter Serial Number:
Length of Sensor Lead:	Ohm Readings Across I.S. Barrier:
mA Readings on Transmitter Lead:	Voltage Reading Entering Level Meter: ____VAC Voltage Leaving Level Meter: _____VAC
Are Flow Sensors Used: Yes _____ No _____	Flow Spool Made of: PVC _____ Stainless Steel _____

Comments: _____

_____

_____

_____

_____

_____

Place one copy of this record in the control panel, return one copy to EPG, and retain original for your records.

In case of problems or questions, contact EPG Companies Inc., 19900 County Road 81, Maple Grove, MN 55311. Phone: 800-762-8418 FAX: 763-493-4812

© 2024 EPG Companies Inc.
PumpMaster, LevelMaster & SurePump are Reg. TM of EPG Companies Inc.

SurePump Warranty Requirements

The following conditions must be met to validate EPG's SurePump warranty…

A: Form 200 must be completed and returned within 10 days of startup.

B: Motor to be protected by dual element time delay fuses.

C: Motor starter overloads must be ambient-compensated quick-trip. Trip must be within 10 seconds.

D: Supply EPG with make and model of starter and overload heaters selected for approval.

© 2024 EPG Companies Inc.

EPG SurePump™ Installation Record

EPG Job No. _____

Installer's Name _____

Address _____

City _____ State _____ Zip _____

Phone _____ Fax _____

Contact name _____

Owner's Name _____

Address _____

City _____ State _____ Zip _____

Phone _____ Fax _____

Contact name _____

Sump Name/ ID _____ Date Installed _____

Leachate or Condensate Temp _____ °F Or °C

Pump:

Model No. _____

Rating: _____ GPM@ _____ Ft. TDH

HP _____ Voltage _____ Phase _____

Actual Pump Delivery _____ GPM@ _____ PSI

Operating Cycle _____ ON (Min/Hr) _____ OFF (Min/Hr) (Circle Min. or Hr. as appropriate)

Side Slope Riser Information:

Slope _____ :1

Length of riser Pipe (A+B) _____ ft.

Vertical Distance = Sump to Top of Riser Pipe (C) _____ ft.

Riser ID _____ SDR _____

Distance From Top of Riser Pipe to Controller _____ ft.

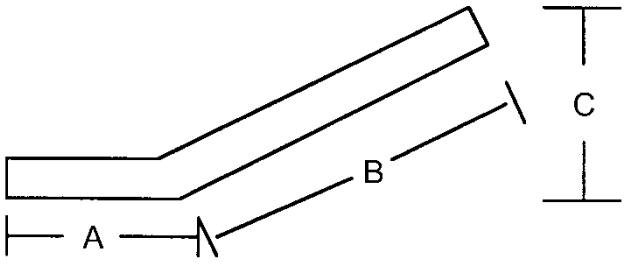

Power Supply:

Cable: Service Entrance to Control Distance _____ ft Wire Size _____ AWG/MCM

Copper ____ Jacketed ____ Aluminum ____ Individual conductors ____

Cable: Control to Motor _____ ft _____ AWG/MCM

Copper ____ Jacketed ____

© 2024 EPG Companies Inc.
PumpMaster & SurePump are Reg. TM of EPG Companies Inc.

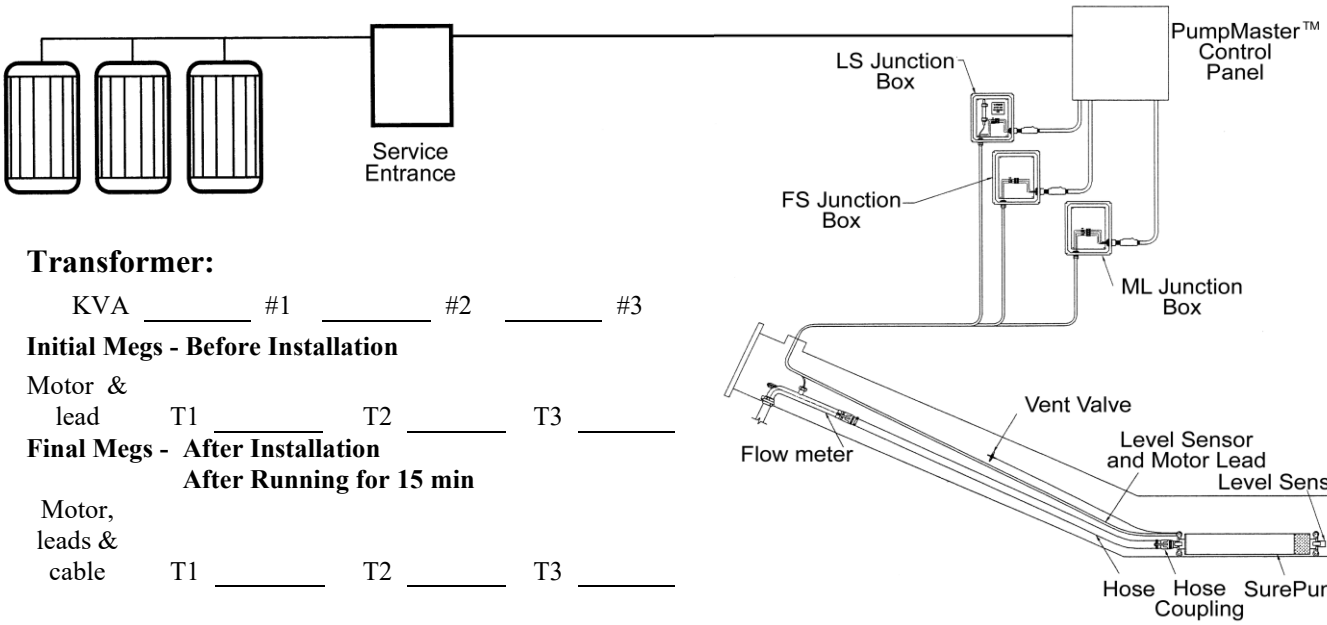

Transformer:

KVA _____ #1 _____ #2 _____ #3

Initial Megs - Before Installation

Motor & lead T1 _____ T2 _____ T3 _____

Final Megs - After Installation

After Running for 15 min

Motor, leads & cable T1 _____ T2 _____ T3 _____

Incoming Voltage:

No Load L1-L2 _____ L2-L3 _____ L1-L3 _____

Full Load L1-L2 _____ L2-L3 _____ L1-L3 _____

Running Amps:

Hookup:1

Full Load L1 _____ L2 _____ L3 _____ % unbalanced _____

Hookup:2

Full Load L1 _____ L2 _____ L3 _____ % unbalanced _____

Hookup:3

Full Load L1 _____ L2 _____ L3 _____ % unbalanced _____

Ground wire size _____ AWG/MCM

DC Ground Current _____ mA Ground Test _____ Ohms

Motor Surge Protection _____ Yes _____ No

Control Panel:

Model # _____

Short Circuit Device

Circuit Breaker _____ Rating _____ Setting

Fuses _____ Type _____ Rating

_____ Standard _____ Time Delay

Controls are Grounded to:

_____ Motor

_____ Rod

_____ Power Supply

Start Overloads:

Set at _____ amps

Name: _____

Company _____

Date _____

© 2024 EPG Companies Inc.
PumpMaster & SurePump are Reg. TM of EPG Companies Inc.

INSTALLATION GUIDE

EPG SurePump™ Pumping System

- ❑ 1. Verify that equipment and supply voltage match.
- ❑ 2. Inspect equipment, look for shipping damage, dirt, and rough handling.
- ❑ 3. Control panel should be mounted in a secure way at least 15’ from riser or sump and 36” above grade to bottom of control panel.
- ❑ 4. When the control panel is mounted, make sure it is level front to back, side to side and top to bottom. Shim and adjust the mounts until it is level and square in all three plains. The door should close without sagging or binding.
- ❑ 5. Inspect inside of control panel. Look for items which might have come loose during shipping.
- ❑ 6. Install breakout junction boxes between the riser or sump and control panel. See instructions for location suggested for junction boxes which are packed with breakout junction boxes.
- ❑ 7. Test level sensor in bucket of water. Does it return back to zero? Control panel needs to be installed and have power to it.
- ❑ 8. Install vent valve and tubing. See Bulletin 0130c.
- ❑ 9. Install suspension cable. See Bulletin 6090a.
- ❑ 10. Fasten motor lead and sensor cable to discharge line every 5’ to 7’ with plastic wire ties. It’s best if they are on separate sides of line; use padding between cables and any metal straps.
- ❑ 11. Run pump down riser slowly using stainless steel suspension cable as hold back. Make sure motor lead and sensor cable are slack as you lower pump.
- ❑ 12. Take ohm reading of each motor lead wire to wire and compare the values in Table 13 of the Franklin Electric motor manual for 1Ø and Table 22 or 24 for 3Ø. Be sure to add wire resistance value to value from table 13. See page 47 for wire resistance.
- ❑ 13. Check insulation resistance as pump is lowered down riser. Resistance may drop gradually as pump and cable enter the liquid, but any sudden drop indicates a problem.
- ❑ 14. Run sensor leads and power cables in separate conduits to control panel. It is a good idea to use breakout junction boxes. See Design Guide 05644 and Bulletin 8230.
- ❑ 15. If you have to remove dryer from end of transducer cable to pull cable through fittings or conduit. Seal end of the vent tube with a piece of tape. Reinstall dryer as soon as possible. See Bulletin 0550a.
- ❑ 16. Megger motor leads. Resistance must be 1 megohm or greater.
- ❑ 17. Connect pump to control panel complying with local and national codes. Controller terminal strips, motor leads, and sensor leads are all labeled and/or color coded to simplify connections.
- ❑ 18. Inspect wire connections. Are they the correct colors? Are they tight?
- ❑ 19. If color-coded wires were not continued from sump or riser you need to ohm out each circuit.

© 2024 EPG Companies Inc.
LevelMaster & SurePump are
Reg. TM of EPG Companies Inc.

- ❑ 20. Measure resistance to ground. It must be less than 25 ohms. If greater stop work and report to owner. It should be 1 ohm or less to protect electronic equipment.
- ❑ 21. Measure voltage prior to control panel or at entrances to control panel. Measure and record voltage line to line.
- ❑ 22. Compare these reading to voltage listed on drawing and label in control panel.
- ❑ 23. Review equipment list and drawings for any accessory circuits. If present, run volt and ohm test.
- ❑ 24. Check and make sure all hand switches are in the off position. If you have a water level indicator verify leachate level in sump or riser.
- ❑ 25. Turn on power at panel main disconnect.
- ❑ 26. Level meters display should light up. Record displayed reading. How does this reading compare to your measured level reading?
- ❑ 27. If level and flow meter do not light up check GFCI, reset if necessary.
- ❑ 28. Are any indicator lights on?
- ❑ 29. Should they be on?
- ❑ 30. Make sure pump is turned off. Using built in or hand held simulator, verify level meter settings are correct for this site. See meter data sheet for factory settings and meter instructions.
- ❑ 31. Bump pump by turning switch to hand two or three times to make sure pump has reached its resting point. You should have minimum of 3' of slack in the cables.
- ❑ 32. To verify correct rotation place hand around discharge line. It will torque right if the rotation is correct when looking down at pump.
- ❑ 33. When pump is running measure and record amperage and voltage. Check 3Ø systems for current balance it should be within 5% of average.
- ❑ 34. Verify that starting, running and stopping causes no significant vibration or hydraulic shocks.
- ❑ 35. After 15 minutes of running time measure volts and amperage to see if they are stable. Are they as specified?
- ❑ 36. After pump and level sensor have been tested pot seal offs.
- ❑ 37. Complete Form 200. Note: <u>If this form is not completed and returned to EPG it will impact system warranty.</u>

Special Instructions: Because electrical fittings are not designed to be liquid or vapor tight, you must use a thread sealant such as Teflon tape on all threaded joints. All field installed openings must be sealed with gasket threaded fittings such as Myers hubs. When using thread tape on joints, the conduit can no longer be considered a ground path. You must pull separate ground wires to bond all the parts to the ground.

© 2024 EPG Companies Inc.
LevelMaster & SurePump are
Reg. TM of EPG Companies Inc.

START UP CHECKLIST

EPG SurePump™ Pumping System

QUESTIONS FOR CONTRACTOR OR INSTALLER

- ❑ A: Did they use the Installation Guide – Bulletin 0610b?
- ❑ B: Are sensor and power cables tied or strapped to discharge line? On what kind of spacing?
- ❑ C: What is the as built length of riser and sump? Are cables long enough? There should be three or more feet of slack in the cables.
- ❑ D: What size cable was run for supply power?
- ❑ E: What is the distance from power supply transformer to pump control panel?
- ❑ F: How has it been verified that pump is down into sump?
- ❑ G: Was the level sensor tested prior to installing?
- ❑ H: Was the pump tested prior to installing or prior to your arrival?
- ❑ I: Was a pressure gauge installed in the pump discharge line?
- ❑ J: Are there any questions or concerns?
- ❑ K: Complete Form 200?

PHYSICAL INSPECTION OF CONTROL PANEL

- ❑ A: Is the control panel located a minimum of 15’ from sump or riser and a minimum of 36” above grade to bottom of panel?
- ❑ B: Are power and sensor cables run in separate conduit? If not, stop work and have this corrected.
- ❑ C: Are seal-offs installed in both sensor and power runs? If not, suggest breakout junction boxes with seal-offs or have seal-offs installed.
- ❑ D: Are seal-offs potted? If not, stop work and have them potted.

Special Instructions: Because electrical fittings are not designed to be liquid or vapor tight, you must use a thread sealant such as Teflon tape on all threaded joints. All field installed openings must be sealed with gasket threaded fittings such as Myers hubs. When using thread tape on joints, the conduit can no longer be considered a ground path. You must pull separate ground wires to bond all the parts to the ground.

© 2024 EPG Companies Inc.
LevelMaster & SurePump are
Reg. TM of EPG Companies Inc.

- E: Will inner and outer door of enclosure open and close freely? If not, loosen enclosure mounting bolts and shim until it is level and square. Then retighten mounting bolts.
- F: Water and vapor tight seals are required at all openings.

PRIOR TO ENERGIZING CONTROL PANEL

- A: Measure resistance to ground. It must be less than 25 Ohms. If greater stop work and report to owner. It should be 1 Ohm or less to protect electronic equipment.
- B: Measure voltage prior to control panel or at entrances to control panel. Measure and record voltage line.
- C: Compare this reading to voltage listed on drawing and label in control panel.
- D: Megger motor leads resistance must be 1 Megohm or greater.
- E: Take Ohm readings of each motor lead wire to wire and compare these to values in Table 13 of the 2011 Franklin Electric AIM Manual for 1Ø and Table 22 or 24 for 3Ø. Be sure to add wire resistance value to value from Tables 13 and 21. See page 47 for wire resistance.
- F: Inspect inside of control panel. Look for items that may have come loose during shipping.
- G: Has sealing edge made contact with the gasket all the way around?
- H: Inspect wire connections. Are they the correct colors? Are they tight?
- I: If color-coded wires were not continued from sump or riser, Ohm out each circuit to confirm.
- J: Review equipment list and drawings from any accessory circuits. If present, run volt and Ohm test.
- K: Check and make sure all hand switches are in off position. If you have a water level indicator verify leachate level in sump or riser.

POWER UP

- A: Turn on power at panel main disconnect.
- B: Level meters display should light up. Record displayed reading. How does this reading compare to the measured level reading?
- C: If level and flow meter do not light up check GFCI, reset if necessary.
- D: Are any indicator lights on? Should they be on?

© 2024 EPG Companies Inc.
LevelMaster & SurePump are
Reg. TM of EPG Companies Inc.

- E: Make sure pump is turned off. Using built in or hand held simulator, verify level meter settings are correct for this site.
- F: Bump pump by turning hand switch two or three times to make sure pump has reached its resting point. You should have minimum of three feet of slack in the cables.
- G: To verify correct rotation place hand around discharge line. It will torque right if the rotation is correct. From the top view of the pump, the correct rotation is counter clockwise.
- H: If there is liquid in sump with level above pump start set point and below 150", turn pump selector switch to AUTO. Run pump through one complete cycle.
- I: While pump is running measure and record amperage and voltage. Check 3Ø systems for current balance within 5% of average. See Franklin Electric motor manual for guideance.
- J: Verify that starting, running and stopping causes no significant vibration or hydraulic shocks.
- K: How does your Form 200 compare to the installers?

© 2024 EPG Companies Inc.
LevelMaster & SurePump are
Reg. TM of EPG Companies Inc.

ENGINEER'S SPECIFICATION

EPG Series YCL925PT PumpMaster™ Controller

3Ø CONTROL PANEL

Furnish one EPG Companies Inc., UL listed 508A/698A, Series YCL925PT controller to operate a pump motor and auxiliary equipment in manual or automatic mode. The control panel enclosure shall be NEMA type 4.

The enclosure shall be equipped with a window in the outer door, an inner door, a stainless steel drip shield, and a tamper resistant latch. The NEMA 4 (standard) enclosure is finished with polyester urethane paint. The NEMA 4X (optional) enclosure can be either N/A stainless steel or N/A white powder coated stainless steel.

The control system will operate from a 230 Volt, 60 Hertz, three phase power supply. Pump control components will be sized to operate a pump motor of specified horsepower.

The control panel shall include the following as standard features:

* Main Disconnect Switch: The main disconnect switch shall be 60 Amp rated and will prevent opening of the control panel while the power is on, and includes 230 Volt, 4 Amp dual element fuses.
* "Hand-Off-Auto" Selector Switch: Allows manual or automatic operation of the pump motor. The selector switch shall be a heavy duty, oil tight, NEMA 4 rated switch mounted on the inner door. The hand position shall be momentary with a spring return.
* Motor Starter: The motor starter shall be sized to the pump motor horsepower, and shall be equipped with built in single phasing protection and ambient compensated, quick trip adjustable thermal overloads.
* Control Transformer: A transformer with fused primary and secondary shall isolate the control circuit from the power circuit and provide easier and safer field wiring of accessories. It shall lower incoming voltage to 120 Volts.
* Run Light: Indicates energization of motor circuit. It shall be heavy duty, oil tight, NEMA 4 rated and shall have an LED lamp with 100,000 hour life. The light shall be mounted on the inner door and will be green in color.
* Motor Overload Light: Indicatesmotor not running due to overload condition. It shall be heavy duty, oil tight, NEMA 4 rated and shall have LED lamp with 100,000 hour life. The light shall be mounted on the inner door and will be red in color.
* OCS as Level Control: The (Operator Control Station) shall be mounted on the inner door. The processor shall have a transflective touchscreen and four selection keys. It shall have the capacity to monitor and maintain liquid levels as well as output alarms. It shall also provide a high-high or low-low level alarm fail safe feature that shuts off the pump motor. The high-high or low-low alarm may indicate level sensor failure or a problem with the pump. The level control shall be accurate to within 0.1 inch.
* OCS as Cycle Counter and Elapsed Time Meter: Shall display the number of starts and elapsed run time of the pump motor.
* OCS as Flow Meter: Shall display the flow rate (gpm) and totalized flow rate.
* OCS Shall include the following: Micro SD memory card, Ethernet communication, USB port, RS232 port and RS485 port.
* Level Simulator: The level simulator shall be mounted on the inner door. The level simulator is a built-in test circuit designed to simulate a 4-20 mA load to assist in level meter setup and troubleshooting.
* Intrinsically Safe Barrier: The level sensor circuit shall be by protected by an intrinsically safe barrier.

© 2024 EPG Companies Inc.
PumpMaster is a Reg. TM of EPG Companies Inc.

* Heater with Adjustable Thermostat: A heater with adjustable thermostat shall promote even distribution of heat and elimination of hot spots and condensation. It shall also maintain the minimum temperature required for the operation of the OCS. The heater element shall be mounted in space between the sub-panel and the back of the enclosure and provide a minimum of 100 inches square of heating area.
* GFCI: Ground fault circuit shall protect level sensing circuit from ground fault.
* Surge Protector: Shall protect sensor circuits and indicating lights from power surges.
* Lightning Arrestor: Shall be grounded, metal-to-metal, to water strata. When properly grounded, the lightning arrestor will protect electrical equipment against lightning induced surges.
* Terminal Strip: A labeled and numbered terminal strip provides easy connection of external components.
* Corrosion Inhibitor Emitter: Inclusion of an industrial corrosion inhibitor emitter shall protect internal components of control panel from corrosion for up to one year and shall be replaceable.

SYSTEM LOGIC AND FUNCTION

The controller is designed to start and stop a pump using the OCS level control meter with a submersible pressure transmitter. The pump starts at the pump start level set point and continues to run until the liquid level decreases to the pump stop level set point as programmed in the OCS level control meter. If the liquid level rises to the high level alarm set point, a high level alarm will be annunciated. If the liquid level falls to the low level alarm set point, a low level alarm will be annunciated. If the liquid level rises to the high-high or falls to the low-low level fail-safe set point, the pump motor will shut off. The pressure transmitter level sensor shall have a range of 0 to 11 feet with a 4-20 mA output signal. The OCS also displays the level, flow rate, totalized flow, counts the number of pump starts and displays run time in hours.

© 2024 EPG Companies Inc.
PumpMaster is a Reg. TM of
EPG Companies Inc.

ATTACHMENT TO BULLETIN 7620

ENGINEER'S SPECIFICATION
EPG YCL925PT Controller
3Ø Control Panel

EPG Job# S42383

These controllers include the following optional features:

- Elapsed time meter
- Cycle counter
- Flow and flow total a pump run led panel mounted light
- The following alarms have panel mounted red led lights:
  - Overload
  - High sump level
  - High level
  - Low level sump
  - Leak detect
  - Alarm reset
  - Tank full alarm with passalong
  - Remote pump disable
- Includes Blue Top Mounted high-high alarm strobe
- 20 Amp remote GFCI outlet
- Heat trac circuit
- 5VA transformer
- Lockable Enclosure

MOTOR	HP	VOLTAGE	FLA	FUSE SIZE
LEACHATE PUMP	1/2	230	2.40	4A

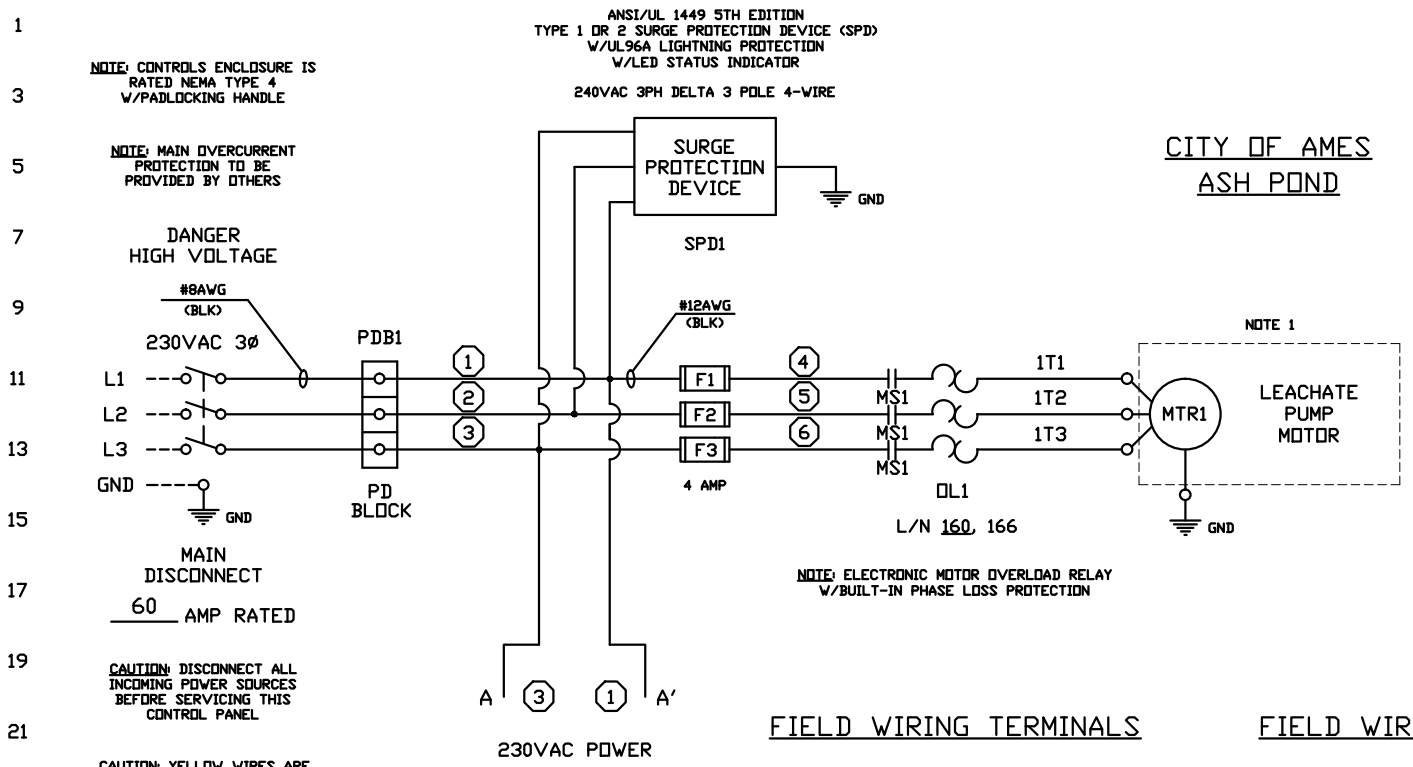

FIELD WIRING TERMINALS

LINE (PANEL) TOTAL AMPS

L1, L2, L3 — 230VAC 3Ø 60Hz, 16.63 AMPS

GND — GROUND

FIELD WIRING TERMINALS

LOAD (230VAC)

1T1, 1T2, 1T3 — LEACHATE PUMP MOTOR

GND

	RATINGS	
FUSE	TYPE	VOLTS	AMPS
F1-F3	LPJ-SP	600	4
F4-F5	LPJ-SP	600	30
F6	LPJ-SP	600	40
F7	LPJ-SP	600	2
F8	LPJ-SP	600	3-1/2
F9	LPJ-SP	600	5
F10	LPJ-SP	600	20

FOR NOTES AND REVISIONS SEE SHEET 12

AS BUILT

JOB No. S42383

* NOTICE * © EPG Companies Inc. 2024
THIS DRAWING IS THE PROPERTY OF EPG COMPANIES FOR REFERENCE ONLY.

TOLERANCES (EXCEPT AS NOTED)
DECIMAL ±
FRACTIONAL ±
ANGULAR ±

REVISIONS

NO.	DATE	BY
1		
2		
3		
4		
5		

EPG COMPANIES

YCL925PT CONTROL PANEL
230VAC 3Ø SH 1 OF 12

DESIGN RCK
DRAWN RCK
CHK'D
SCALE
DATE 07-26-24
APP'D
MATERIAL
DRAWING NO. 13367-0250

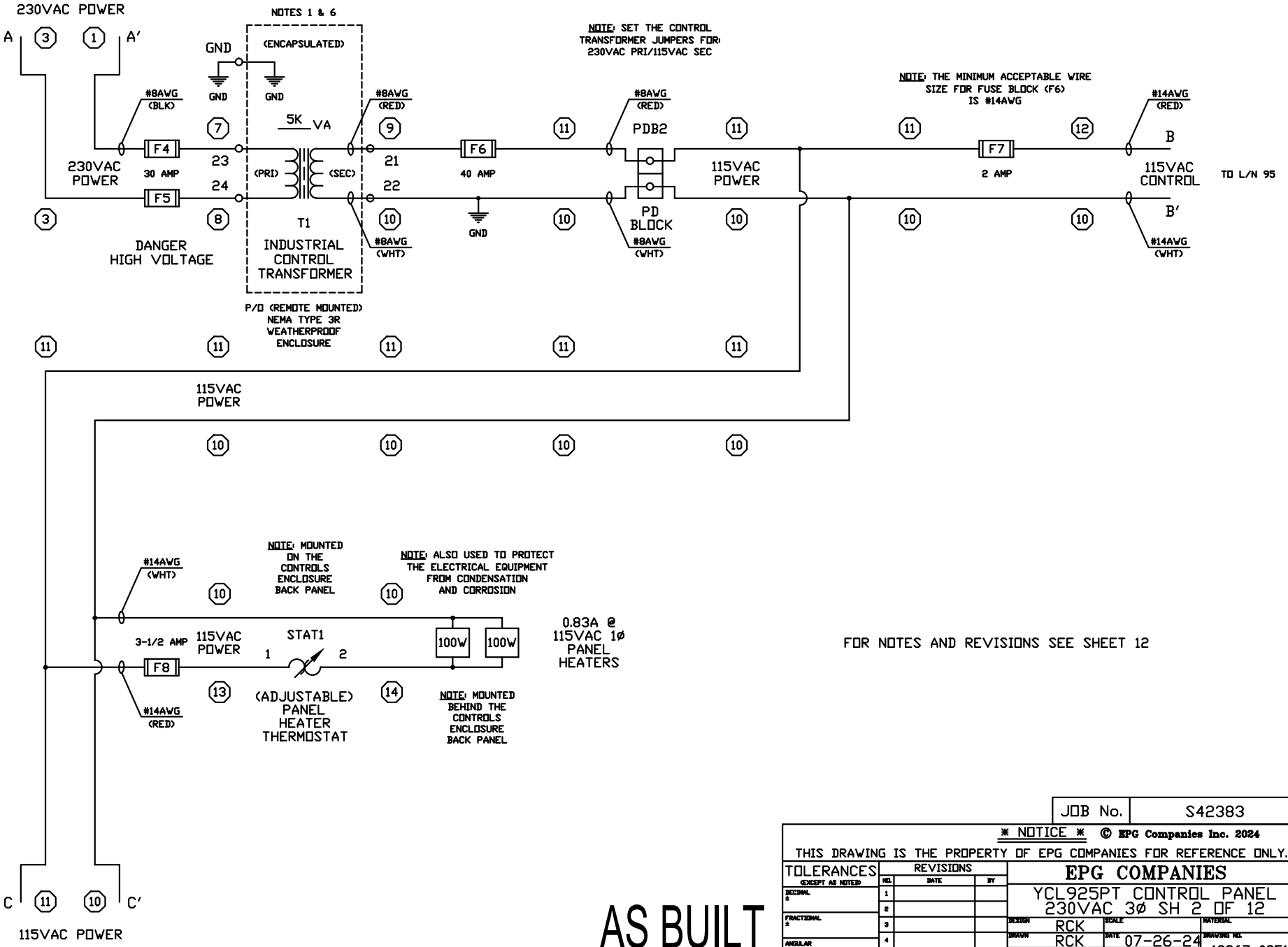

FOR NOTES AND REVISIONS SEE SHEET 12

AS BUILT

JOB No.	S42383

* NOTICE * © EPG Companies Inc. 2024
THIS DRAWING IS THE PROPERTY OF EPG COMPANIES FOR REFERENCE ONLY.

TOLERANCES (EXCEPT AS NOTED)
DECIMAL ±
FRACTIONAL ±
ANGULAR ±

REVISIONS			
NO.	DATE	BY
1		
2		
3		
4		
5		

EPG COMPANIES

YCL925PT CONTROL PANEL
230VAC 3ø SH 2 OF 12

DESIGN	SCALE	MATERIAL
RCK		
DRAWN	DATE	DRAWING NO.
RCK	07-26-24	13367-0251
CHK'D	APP'D	

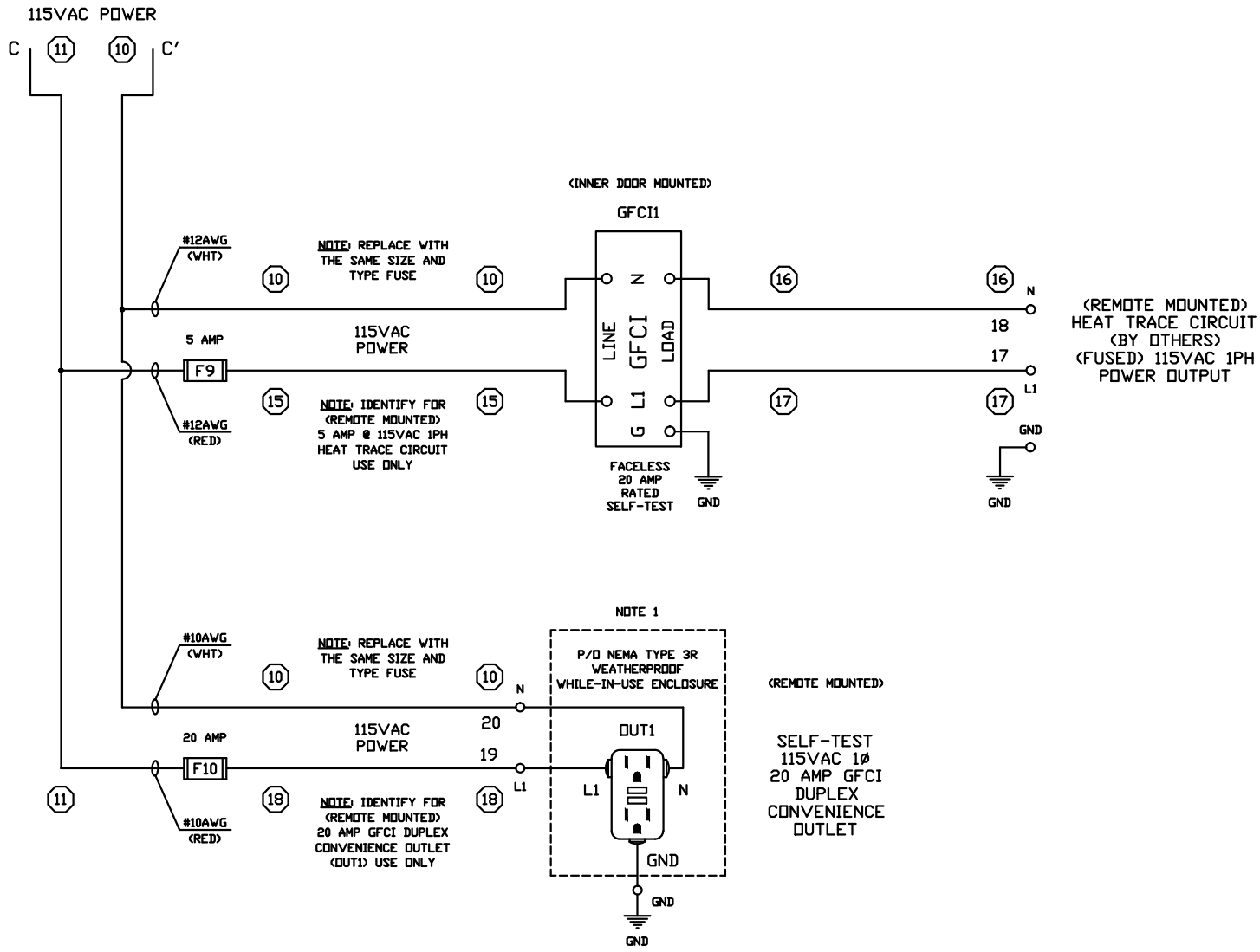

FOR NOTES AND REVISIONS SEE SHEET 12

AS BUILT

JOB No.	S42383

* NOTICE * © EPG Companies Inc. 2024
THIS DRAWING IS THE PROPERTY OF EPG COMPANIES FOR REFERENCE ONLY.

TOLERANCES (EXCEPT AS NOTED)	REVISIONS			EPG COMPANIES		
DECIMAL ±	NO.	DATE	BY	YCL925PT CONTROL PANEL 230VAC 3ø SH 3 OF 12		
FRACTIONAL ±	1					
ANGULAR ±	2					
	3			DESIGN RCK	SCALE	MATERIAL
	4			DRAWN RCK	DATE 07-26-24	DRAWING NO. 13367-0252
	5			CHK'D	APP'D	

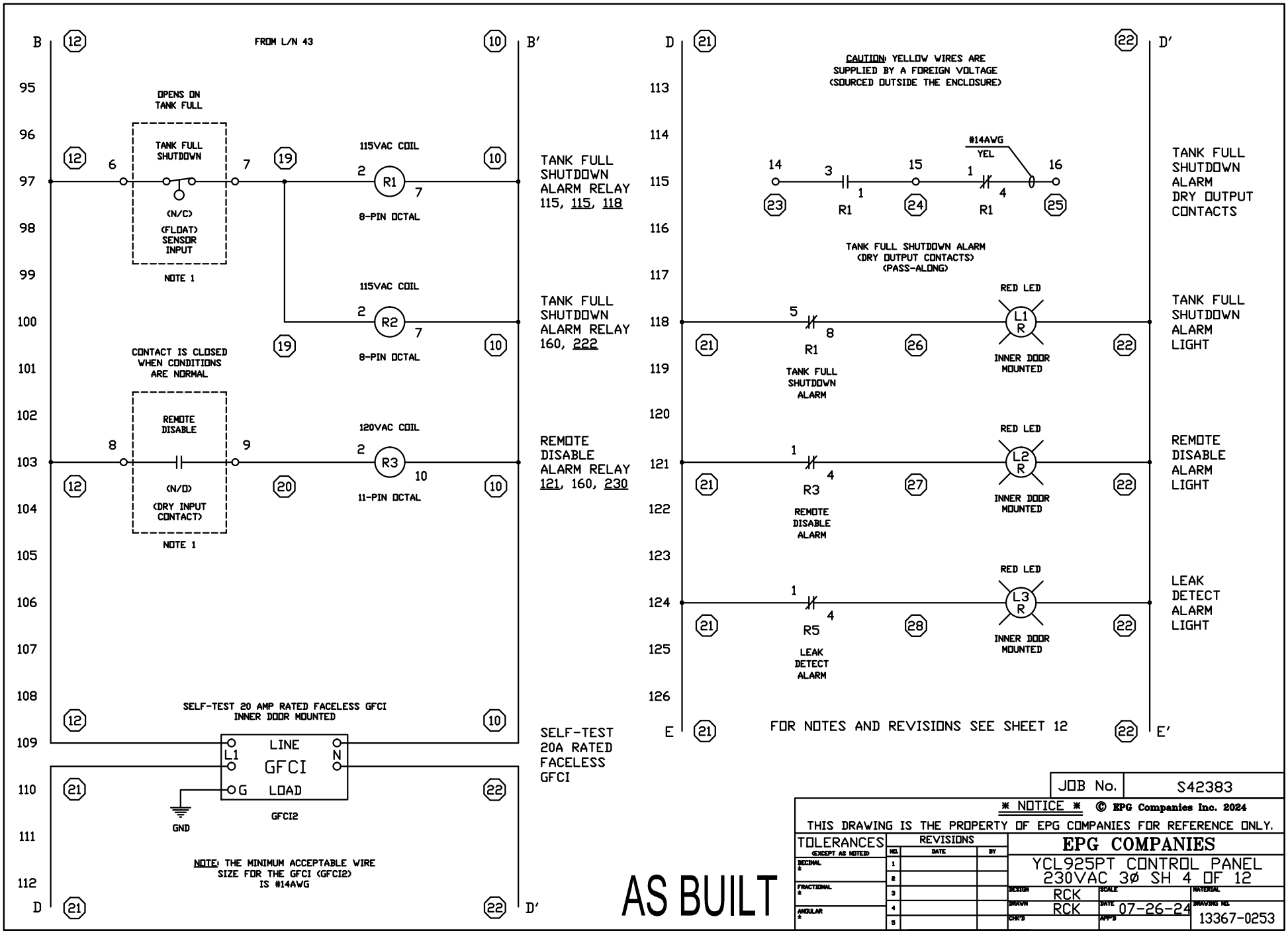

AS BUILT

JOB No. S42383

* NOTICE * © EPG Companies Inc. 2024
THIS DRAWING IS THE PROPERTY OF EPG COMPANIES FOR REFERENCE ONLY.

TOLERANCES (EXCEPT AS NOTED)
DECIMAL ±
FRACTIONAL ±
ANGULAR ±

REVISIONS

NO.	DATE	BY
1		
2		
3		
4		
5		

EPG COMPANIES

YCL925PT CONTROL PANEL
230VAC 3Ø SH 4 OF 12

DESIGN	RCK	SCALE	MATERIAL
DRAWN	RCK	DATE 07-26-24	DRAWING NO. 13367-0253
CHK'D		APP'D	

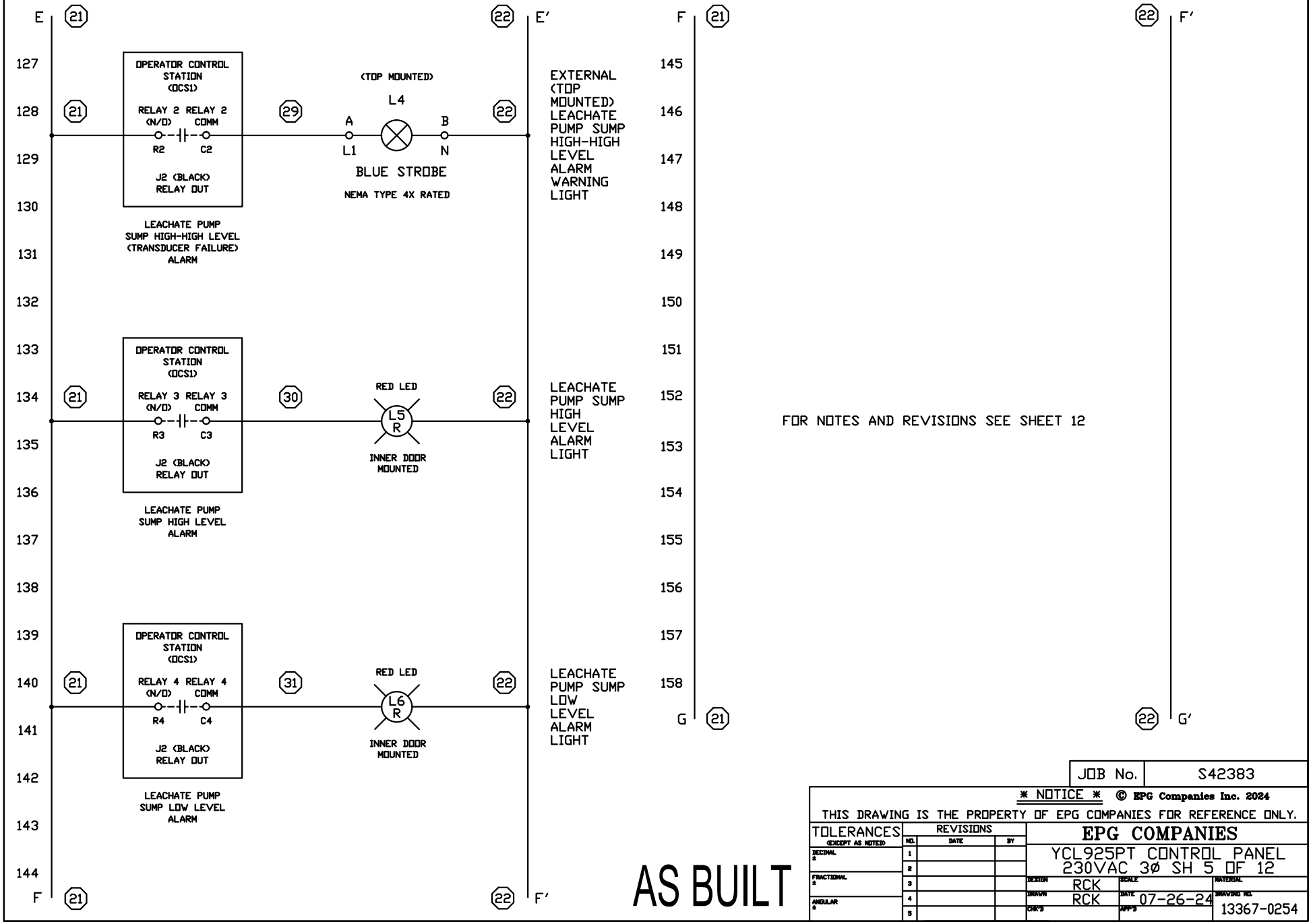

FOR NOTES AND REVISIONS SEE SHEET 12

AS BUILT

JOB No.	S42383

* NOTICE * © EPG Companies Inc. 2024

THIS DRAWING IS THE PROPERTY OF EPG COMPANIES FOR REFERENCE ONLY.

TOLERANCES (EXCEPT AS NOTED)	REVISIONS NO.	DATE	BY
DECIMAL ±	1		
FRACTIONAL ±	2		
ANGULAR ±	3		
	4		
	5		

EPG COMPANIES

YCL925PT CONTROL PANEL
230VAC 3Ø SH 5 OF 12

DESIGN	SCALE	MATERIAL
RCK		
DRAWN RCK	DATE 07-26-24	DRAWING NO. 13367-0254
CHK'D	APP'D	

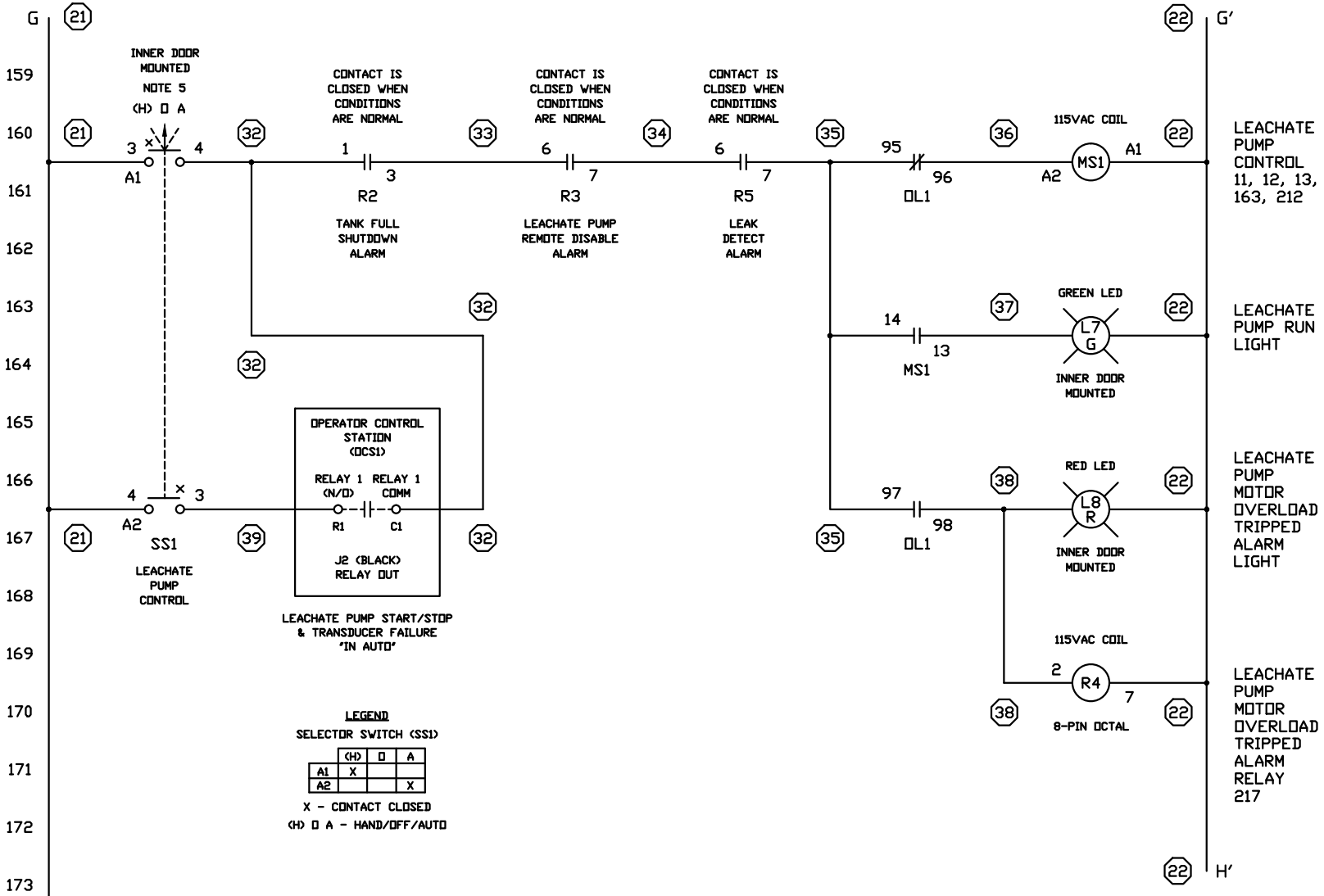

FOR NOTES AND REVISIONS SEE SHEET 12

AS BUILT

JOB No.	S42383

* NOTICE * © EPG Companies Inc. 2024

THIS DRAWING IS THE PROPERTY OF EPG COMPANIES FOR REFERENCE ONLY.

TOLERANCES (EXCEPT AS NOTED)	REVISIONS			EPG COMPANIES		
DECIMAL ±	NO.	DATE	BY	YCL925PT CONTROL PANEL 230VAC 3ø SH 6 OF 12		
FRACTIONAL ±	1					
ANGULAR ±	2					
	3			DESIGN RCK	SCALE	MATERIAL
	4			DRAWN RCK	DATE 07-26-24	DRAWING NO. 13367-0255
	5			CHK'D	APP'D	

H (21)

177

178

179

180

181

182

183

184

185

186

187

188

189

190

191

192

193

194

I (21)

NOTE: W/OPERATOR CONTROL STATION (OCS1)
(REMOTE MOUNTED) USB RECEPTACLE MOUNTED ON THE INNER DOOR
W/INTERCONNECTING CABLE & (BLANK) USB FLASH DRIVE
(USED FOR DATA LOGGING)

NOTE: INPUTS I11(H3) & I12(H4) ARE NOT USED

OPERATOR CONTROL STATION (OCS1)					
P/N OCS-004P-102 (I/O MAP)					
I/O	DESC	L/N	I/O	DESC	L/N
I1	LEACHATE PUMP RUN INPUT	212	A1	LEACH PUMP (4-20mA) LEVEL SENSOR INPUT	273
I2	LEACHATE PUMP MOTOR OL TRIP ALARM INPUT	217	A2	(SPARE)	
I3	TANK FULL SHUTDOWN ALARM INPUT	222	A3	(SPARE)	
I4	REMOTE DISABLE ALARM INPUT	230	A4	(SPARE)	
I5	LEAK DETECT ALARM INPUT	235	R1	LEACHATE PUMP START/STOP OUTPUT	166
I6	(SPARE)		R2	LEACHATE PUMP SUMP HI-HI LVL ALARM OUTPUT	128
I7	(SPARE)		R3	LEACHATE PUMP SUMP HI LVL ALARM OUTPUT	134
I8	(SPARE)		R4	LEACHATE PUMP SUMP LOW LVL ALARM OUTPUT	140
I9(H1)	(SPARE)		R5	(SPARE)	
I10(H2)	(SPARE)		R6	(SPARE)	

I - DIGITAL INPUT, H - HIGH SPEED, A - ANALOG INPUT, R - RELAY OUTPUT

(22) H'

(22) I'

AS BUILT

115VAC

115VAC COMMON

I (21)

(22) I'

RED

WHT

195

NOTE: W/BUILT-IN SHORT CIRCUIT/OVER LOAD/
OVER VOLTAGE AND OVER TEMPERATURE PROTECTION
COOLING BY FREE AIR CONVECTION

(21)

(22)

196

AC/L 115VAC AC/N
1 2

15W/0.625A @ 24VDC

197

5 4

24VDC POWER SUPPLY

(+)V 24VDC (-)V

198

(40)

(41)

POWER SUPPLY PWS1

199

3

FG

GND

15W SINGLE OUTPUT SWITCHING POWER SUPPLY
W/LED INDICATOR FOR POWER ON

GND

200

201

202

203

204

PUR

GRY

205

FOR NOTES AND REVISIONS SEE SHEET 12

206

207

208

J (40)

(41) J'

(+)24VDC

(-)24VDC

JOB No.	S42383

* NOTICE * © EPG Companies Inc. 2024
THIS DRAWING IS THE PROPERTY OF EPG COMPANIES FOR REFERENCE ONLY.

TOLERANCES (EXCEPT AS NOTED)
DECIMAL ±
FRACTIONAL ±
ANGULAR ±

REVISIONS			
NO.	DATE	BY
1		
2		
3		
4		
5		

EPG COMPANIES

YCL925PT CONTROL PANEL
230VAC 3Ø SH 7 OF 12

DESIGN	RCK	SCALE	MATERIAL
DRAWN	RCK	DATE 07-26-24	DRAWING NO. 13367-0256
CHK'D		APP'D	

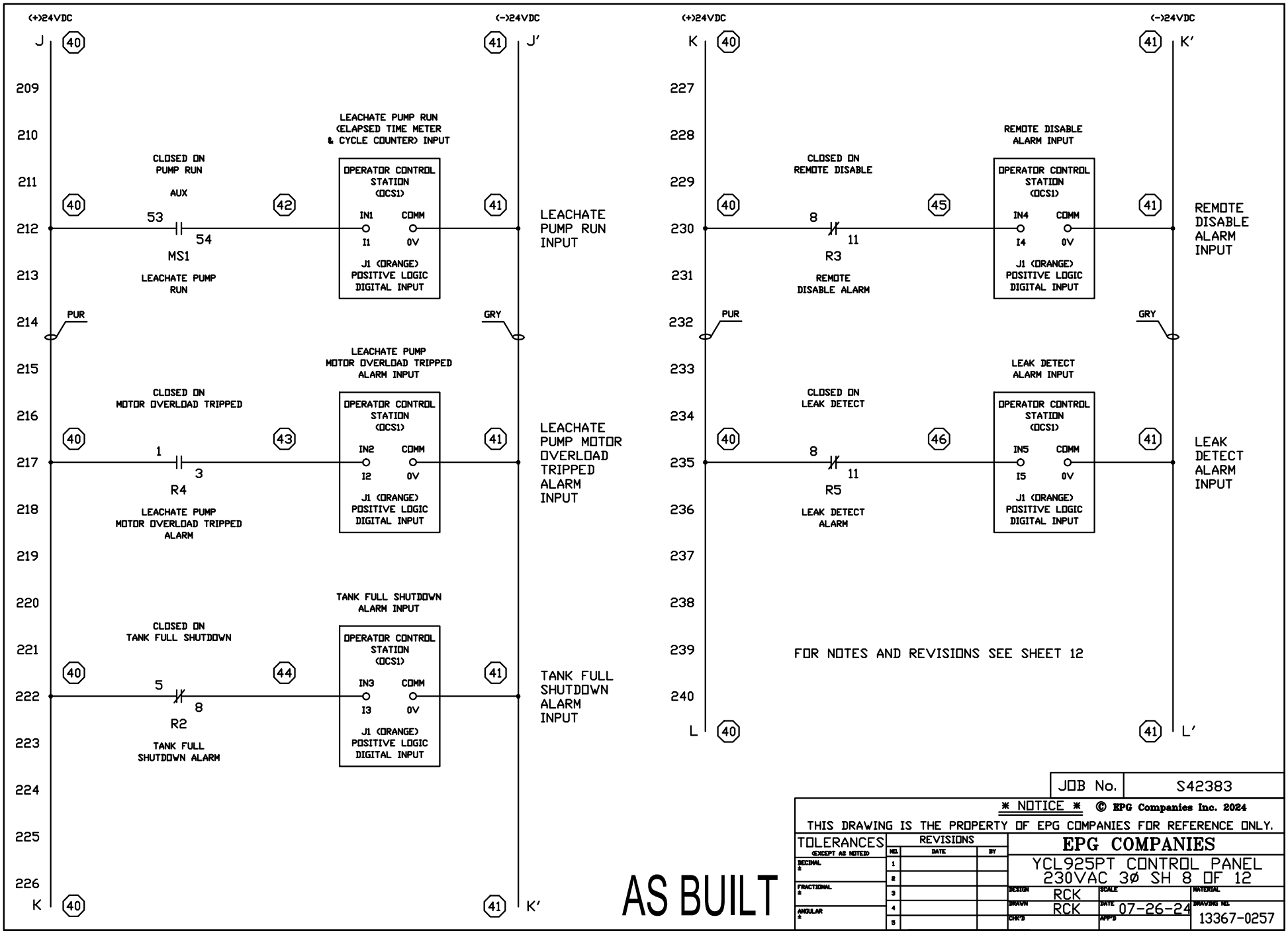

AS BUILT

JOB No.	S42383

* NOTICE * © EPG Companies Inc. 2024

THIS DRAWING IS THE PROPERTY OF EPG COMPANIES FOR REFERENCE ONLY.

TOLERANCES (EXCEPT AS NOTED)	REVISIONS			EPG COMPANIES		
DECIMAL ±	NO.	DATE	BY	YCL925PT CONTROL PANEL 230VAC 3ø SH 8 OF 12		
FRACTIONAL ±	1					
ANGULAR ±	2					
	3			DESIGN RCK	SCALE	MATERIAL
	4			DRAWN RCK	DATE 07-26-24	DRAWING NO. 13367-0257
	5			CHK'D	APP'D	

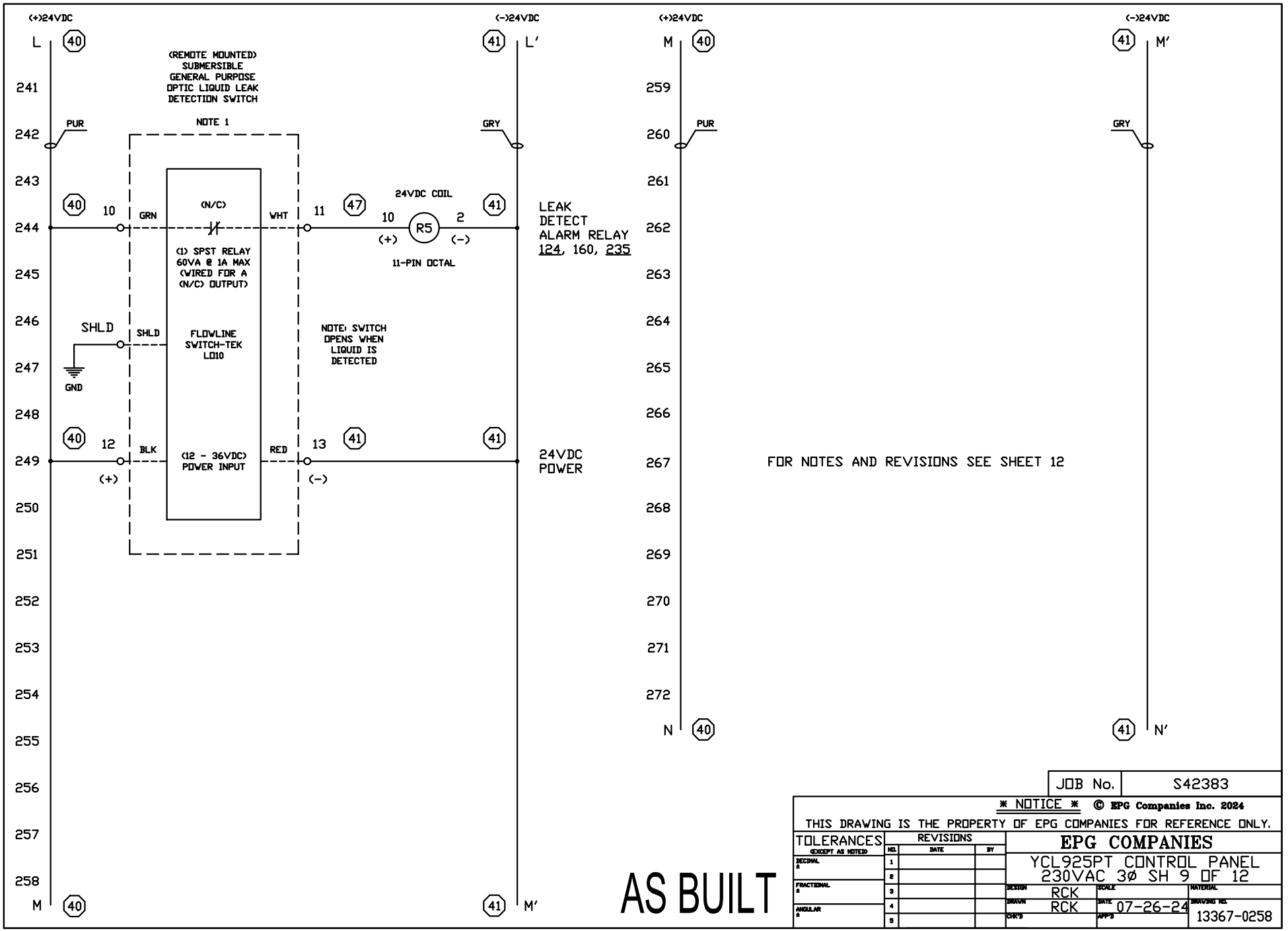

AS BUILT

JOB No.	S42383

* NOTICE * © EPG Companies Inc. 2024

THIS DRAWING IS THE PROPERTY OF EPG COMPANIES FOR REFERENCE ONLY.

TOLERANCES (EXCEPT AS NOTED)	REVISIONS			EPG COMPANIES			
DECIMAL ±	NO.	DATE	BY	YCL925PT CONTROL PANEL 230VAC 3Ø SH 9 OF 12			
FRACTIONAL ±	1						
ANGULAR ±	2						
	3			DESIGN RCK	SCALE	MATERIAL	
	4			DRAWN RCK	DATE 07-26-24	DRAWING NO. 13367-0258	
	5			CHK'D	APP'D		

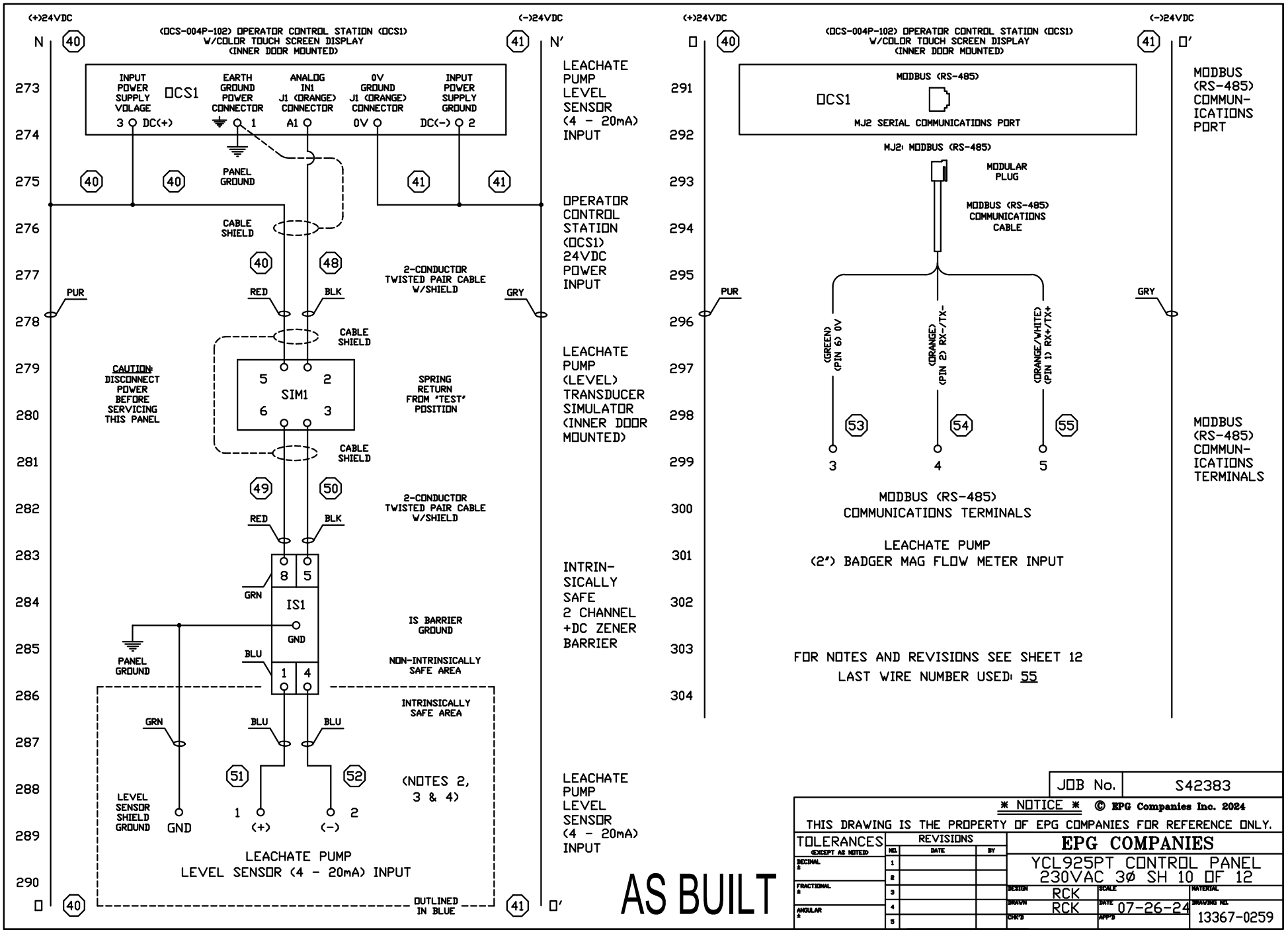

JOB No. S42383

* NOTICE * © EPG Companies Inc. 2024
THIS DRAWING IS THE PROPERTY OF EPG COMPANIES FOR REFERENCE ONLY.

TOLERANCES (EXCEPT AS NOTED)
DECIMAL ±
FRACTIONAL ±
ANGULAR ±

REVISIONS

NO.	DATE	BY
1		
2		
3		
4		
5		

EPG COMPANIES

YCL925PT CONTROL PANEL
230VAC 3Ø SH 10 OF 12

DESIGN	RCK	SCALE	MATERIAL
DRAWN	RCK	DATE 07-26-24	DRAWING NO. 13367-0259
CHK'D		APP'D	

FIELD WIRING TERMINALS

LEVEL SENSOR (INTRINSICALLY SAFE TERMINALS)

L/N 288

1	— (+) RED	LEACHATE PUMP LEVEL SENSOR (4 - 20mA) INPUT (NOTES 2, 3 & 4)
2	— (-) BLACK	
GND	— SHIELD GROUND	

MODBUS (RS-485) COMMUNICATIONS TERMINALS

L/N 298

3	— (PIN 6)	— 0V	— GREEN	MODBUS (RS-485) COMMUNICATIONS TERMINALS W/(1) 2" MAG FLOW METER INPUT
4	— (PIN 2)	— RX-/TX-	— ORANGE	
5	— (PIN 1)	— RX+/TX+	— ORN/WHT	

TANK LEVEL SENSOR (DRY INPUT CONTACT)

L/N 97

6	(N/C) TANK LEVEL (FLOAT) SENSOR (DRY INPUT CONTACT)
7	

REMOTE DISABLE (DRY INPUT CONTACT)

L/N 103

8	(N/O) REMOTE DISBLE (DRY INPUT CONTACT)
9	

FOR NOTES AND REVISIONS SEE SHEET 12

LOAD (115VAC)

L/N 128

A	— L1	EXTERNAL (TOP MOUNTED) HIGH-HIGH LEVEL ALARM (TRANSDUCER FAILURE) WARNING LIGHT (L4)
B	— N	

LOAD (24VDC)

L/N 244

10	— GRN	(REMOTE MOUNTED) 24VDC OPTIC LEAK DETECTION SWITCH
11	— WHT	
GND	— SHLD GND	
12	— (+) BLK	
13	— (-) RED	

ALARM (DRY OUTPUT CONTACTS)

L/N 115

14	TANK FULL SHUTDOWN ALARM W/1-N/O & 1-N/C (DRY OUTPUT CONTACTS) (PASS-ALONG)
15	
16	

AS BUILT

JOB No.	S42383

* NOTICE * © EPG Companies Inc. 2024
THIS DRAWING IS THE PROPERTY OF EPG COMPANIES FOR REFERENCE ONLY.

TOLERANCES (EXCEPT AS NOTED)
DECIMAL ±
FRACTIONAL ±
ANGULAR ±

REVISIONS

NO.	DATE	BY
1		
2		
3		
4		
5		

EPG COMPANIES

YCL925PT CONTROL PANEL
230VAC 3Ø SH 11 OF 12

DESIGN	RCK	SCALE	MATERIAL
DRAWN	RCK	DATE 07-26-24	DRAWING NO. 13367-0260
CHK'D		APP'D	

FIELD WIRING TERMINALS

LOAD (115VAC)

L/N 80

17	— N	HEAT TRACE CIRCUIT (FUSED) 5A (MAX) @ 115VAC 1PH POWER OUTPUT (F9)
18	— L1	
GND	— GND	

LOAD (115VAC)

L/N 86

19	— N	(REMOTE MOUNTED) SELF-TEST GFCI DUPLEX CONVENIENCE OUTLET (OUT1) (FUSED) 15A (MAX) @ 115VAC 1PH POWER OUTPUT (F10)
20	— L1	
GND	— GND	

LOAD (230VAC)

23		CONTROL POWER TRANSFORMER (T1) 230VAC 1ø PRIMARY OUTPUT POWER
24		
L/N 43 GND	—	TRANSFORMER GROUND (NOTE 6)
21	— POWER	CONTROL POWER TRANSFORMER (T1) 115VAC/1ø SECONDARY INPUT POWER
22	— COMMON	

NOTES:

1. NOT PART OF CONTROLLER
2. REFERENCE INSTALLATION OF INTRINSICALLY SAFE INSTRUMENT SYSTEMS IN CLASS I HAZARDOUS LOCATIONS, ANSI/ISA-RP 12.6-1987, SECTION 4.5.4
3. WARNING: SUBSTITUTION OF COMPONENTS MAY IMPAIR INTRINSIC SAFETY
4. INSTALL IN ACCORDANCE WITH ARTICLE 504 OF THE NATIONAL ELECTRIC CODE
5. SELECTOR SWITCH, (SS1) WILL SPRING RETURN FROM THE "HAND" POSITION
6. SEE BULLETIN 7020 FOR THE PROPER INSTALLATION OF THE POWER TRANSFORMER (T1) AND THE CONTROL POWER TRANSFORMER GROUND

AS BUILT

JOB No.	S42383

* NOTICE * © EPG Companies Inc. 2024
THIS DRAWING IS THE PROPERTY OF EPG COMPANIES FOR REFERENCE ONLY.

TOLERANCES (EXCEPT AS NOTED)	REVISIONS			EPG COMPANIES		
DECIMAL ±	NO.	DATE	BY	YCL925PT CONTROL PANEL 230VAC 3ø SH 12 OF 12		
FRACTIONAL ±	1			DESIGN RCK	SCALE	MATERIAL
ANGULAR ±	2			DRAWN RCK	DATE 07-26-24	DRAWING NO. 13367-0261
	3			CHK'D	APP'D	
	4					
	5					

EPG Operator Control Station pump controller

Panel S/N: S42383
OCS S/N: 1671

Default setting - Operating Parameters

Meter Designation(s): **OCS1** **WSDPT 7 - 1**

Parameter	Value	Operation
PUMP ON LEVEL	33	Turns Pump on when level on meter reads 33 ".
PUMP OFF LEVEL	16	Turns Pump off when level on meter reads 16 ".
LOW ALARM ON LEVEL	0	Turns Low Level Alarm on when meter reads 0 ".
LOW ALARM OFF LEVEL	0	Turns Low Level Alarm off when meter reads 0 ".
HIGH ALARM ON LEVEL	39	Turns High Level Alarm on when meter reads 39 ".
HIGH ALARM OFF LEVEL	38	Turns High Level Alarm off when meter reads 38 ".
HIGH HIGH ALARM ON LEVEL (POSSIBLE SENSOR FAILURE)	143	Turns High High Level Alarm on when meter reads 143 ".
HIGH HIGH ALARM OFF LEVEL	142	Turns High High Level Alarm off when meter reads 142 ".

Default Settings - Sensor Parameters (0 - 5 PSI) (0 - 11 Feet)

Parameter	Value	Operation
OFFSET	-34.6	Provides a "0" reading when sensor inputs 4.0ma
FULL SCALE	138.4	Provides a "138.4" reading when sensor inputs 20.0ma

AS BUILT

EPG YCL Pump Controller

OPERATION & SETUP INSTRUCTIONS

The EPG YCL Pump Controller uses an Operator Control Station (OCS) with touchscreen display to control the operations of the pump(s) at the site. The OCS takes the signals from the instrumentation (level sensors, flow meters, level floats, etc.) displays the values, alarm status, and controls the starting and stopping of the pump(s). The user can program the desired control parameters for the pump(s), alarm on and off set points, and reset the cycle counters, elapsed time meters, and flow totalizer (if included). When the OCS is powered up, the display screens scroll automatically. By pushing the F1 -F4 keys, the appropriate screen can be displayed. The screen will display for approximately 8 seconds and then will revert to the scrolling between the screens. The F-keys will display the screen as follows:

KEY	SCREEN DISPLAYED
F1	Liquid Level
F2	ETM / Cycle Counter
F3	Alarms
F4	Flow Rate & Total (if used)

GENERAL SETUP OPERATIONS

The OCS will come preprogrammed with the appropriate settings for your application. Use the following instructions to make modifications to the settings.

- Scrolling Display Screens
  - Display screens for Level, Pump Hours & Cycles, Alarms, and Flow scroll every 4 seconds.
  - To modify settings tap "**SETTINGS**" button on any screen to access the Passcode Entry screen.

- Passcode Entry Screen
  - Tap "**ENTER PASSCODE HERE**" button to bring up entry screen.
    - On Passcode Entry screen type in "**2613**" and hit enter to go to the Settings screen.
  - Tap the "BACK" button to return to the Scrolling Display screens.

- Settings Screen
  - Tap "**LEVEL SETTINGS**" button to access the Level Settings screen.
  - Tap "**RESETS**" button to access the Reset screen.
  - Tap the "**BACK**" button to return to the Scrolling Display screens.

 © 2013 EPG Companies Inc.

- Level Settings Screen
  - Tap "**LEVEL SENSOR SETTINGS**" button to access the sensor settings.
    - Tap "**OFFSET**" button to modify level sensor offset value.
      - Type in the desired value for the sensor offset. Contact sensor supplier for appropriate value.
      - Tap "ENTER" button to return to the Sensor Settings screen.
    - Tap "**FULL SCALE**" button to modify full scale range value for the sensor.
      - Type in the desired value for the range of the sensor. Contact sensor supplier for appropriate value.
      - Tap "ENTER" button to return to the Sensor Settings screen.
    - Tap the "**BACK**" button to return to the Level Settings screen.

  - Tap "**PUMP 1 ON/OFF**" button to access the Pump 1 Settings screen.
    - Tap "**PUMP 1 ON LEVEL**" button to modify the Pump 1 start level value.
      - Type in the desired value for the start level.
      - Tap "ENTER" button to return to the Pump 1 Settings screen.
    - Tap "**PUMP 1 OFF LEVEL**" button to modify the Pump 1 stop level value.
      - Type in the desired value for stop level.
      - Tap "ENTER" button to return to the Pump 1 Settings screen.
    - Tap the "**BACK**" button to return to the Level Settings screen.

  - Tap "**PUMP 2 ON/OFF**" button to access the Pump 2 Settings screen (if used).
    - Tap "**PUMP 2 ON LEVEL**" button to modify the Pump 1 start level value.
      - Type in the desired value for the start level.
      - Tap "ENTER" button to return to the Pump 2 Settings screen.
    - Tap "**PUMP 2 OFF LEVEL**" button to modify the Pump 2 stop level value.
      - Type in the desired value for the stop level.
      - Tap "ENTER" button to return to the Pump 2 Settings screen.
    - Tap the "**BACK**" button to return to the Level Settings screen.

  - Tap "**HIGH ALARM**" button to access the High Alarm Settings screen.
    - Tap "**HIGH ALARM ON LEVEL**" button to modify the High Level alarm on value.
      - Type in the desired value for the High Alarm on level.
      - Tap "ENTER" button to return to the High Alarm Settings screen.
    - Tap "**HIGH ALARM OFF LEVEL**" button to modify the High Level alarm off value.
      - Type in the desired value for the High Alarm off level.
      - Tap "ENTER" button to return to the High Alarm Settings screen.
    - Tap the "**BACK**" button to return to the Level Settings screen.

  - Tap "**HIGH HIGH ALARM**" button to access the High High Alarm Settings screen.

 © 2013 EPG Companies Inc.

- Tap "**HIGH HIGH ALARM ON LEVEL**" button to modify the High High Level alarm on value.
  - Type in the desired value for the High High Alarm on level.
  - Tap "ENTER" button to return to the High High Alarm Settings screen.
- Tap "**HIGH ALARM OFF LEVEL**" button to modify the High High Level alarm off value.
  - Type in the desired value for the High High Alarm off level.
  - Tap "ENTER" button to return to the High High Alarm Settings screen.
- Tap the "**BACK**" button to return to the Level Settings screen.

o Tap the "**BACK**" button to return to the Settings screen.

- Reset Screen
  - o Tap "**ELAPSED TIME METER 1**" button to access the ETM 1 Reset screen.
    - Tap "**YES, RESET ETM 1**" button to reset the elapsed time meter for Pump 1. An alert screen will pop up stating that the Elapsed Time Meter was reset to zero.
    - Tap "**CANCEL**" to not reset the elapsed time meter for Pump 1 and return to the Reset Screen.

  - o Tap "**ELAPSED TIME METER 2**" button to access the ETM 2 Reset screen (if used).
    - Tap "**YES, RESET ETM 2**" button to reset the elapsed time meter for Pump 2. An alert screen will pop up stating that the Elapsed Time Meter was reset to zero.
    - Tap "**CANCEL**" to not reset the elapsed time meter for Pump 2 and return to the Reset screen.

  - o Tap "**CYCLE COUNTER 1**" button to access the Cycle Counter 1 Reset screen.
    - Tap "**YES, RESET COUNTER 1**" button to reset the cycle counts for Pump 1. An alert screen will pop up stating that the Cycle Counter was reset to zero.
    - Tap "**CANCEL**" to not reset the cycle counts for Pump 1 and return to the Reset screen.

  - o Tap "**CYCLE COUNTER 2**" button to access the Cycle Counter 2 Reset screen (if used).
    - Tap "**YES, RESET COUNTER 2**" button to reset the cycle counts for Pump 2. An alert screen will pop up stating that the Cycle Counter was reset to zero.
    - Tap "**CANCEL**" to not reset the cycle counts for Pump 2 and return to the Reset

  - o Tap "**FLOW TOTAL**" button to access the Flow Total Reset screen.
    - Tap "**YES, RESET TOTAL**" button to reset the flow totalizer. An alert screen will pop up stating that the Flow Meter Totalizer was reset to zero.
    - Tap "**CANCEL**" to not reset the Flow Total and return to the Reset screen.

  - o Tap the "**BACK**" button to return to the Settings screen.

 © 2013 EPG Companies Inc.

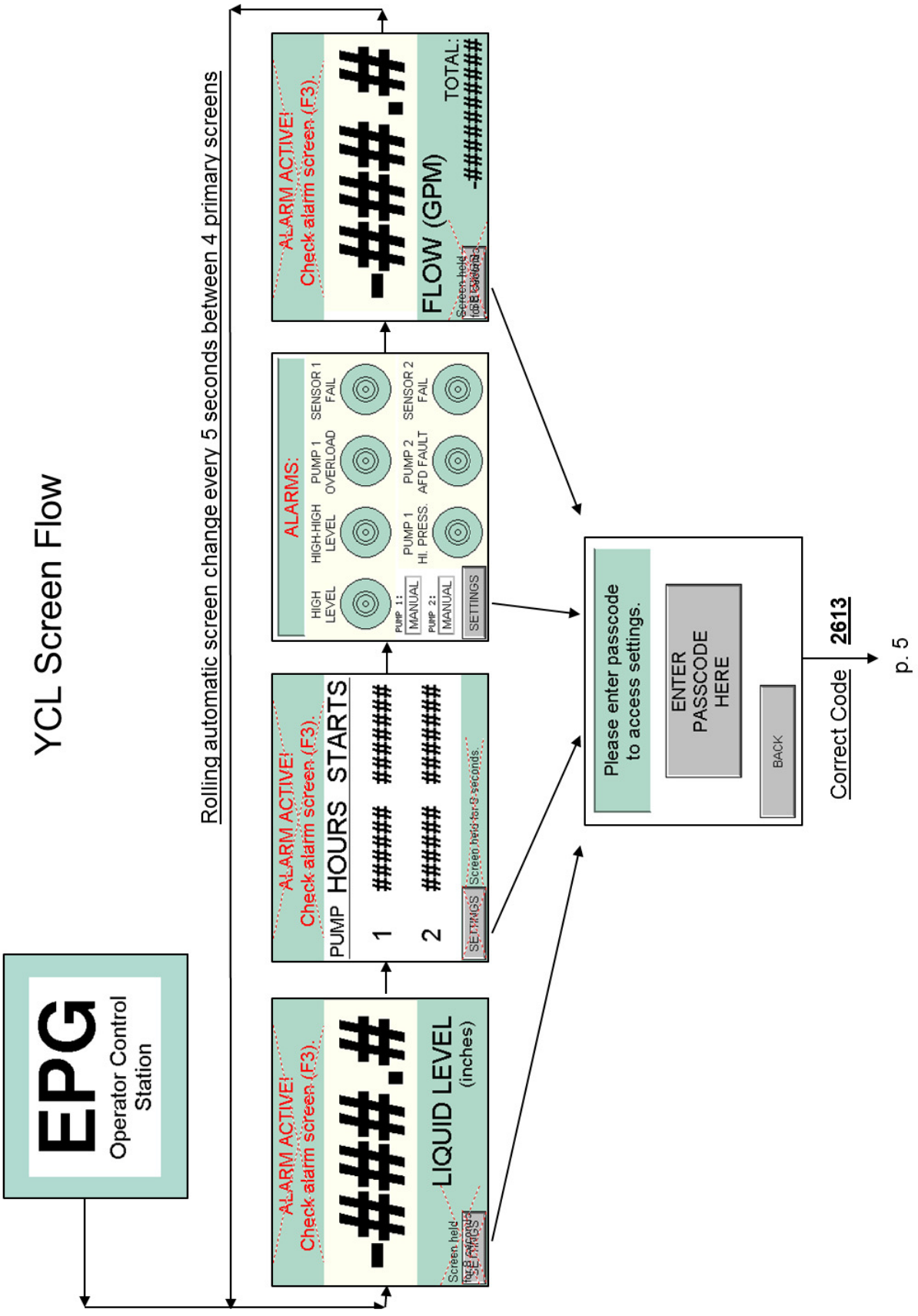

 © 2013 EPG Companies Inc.

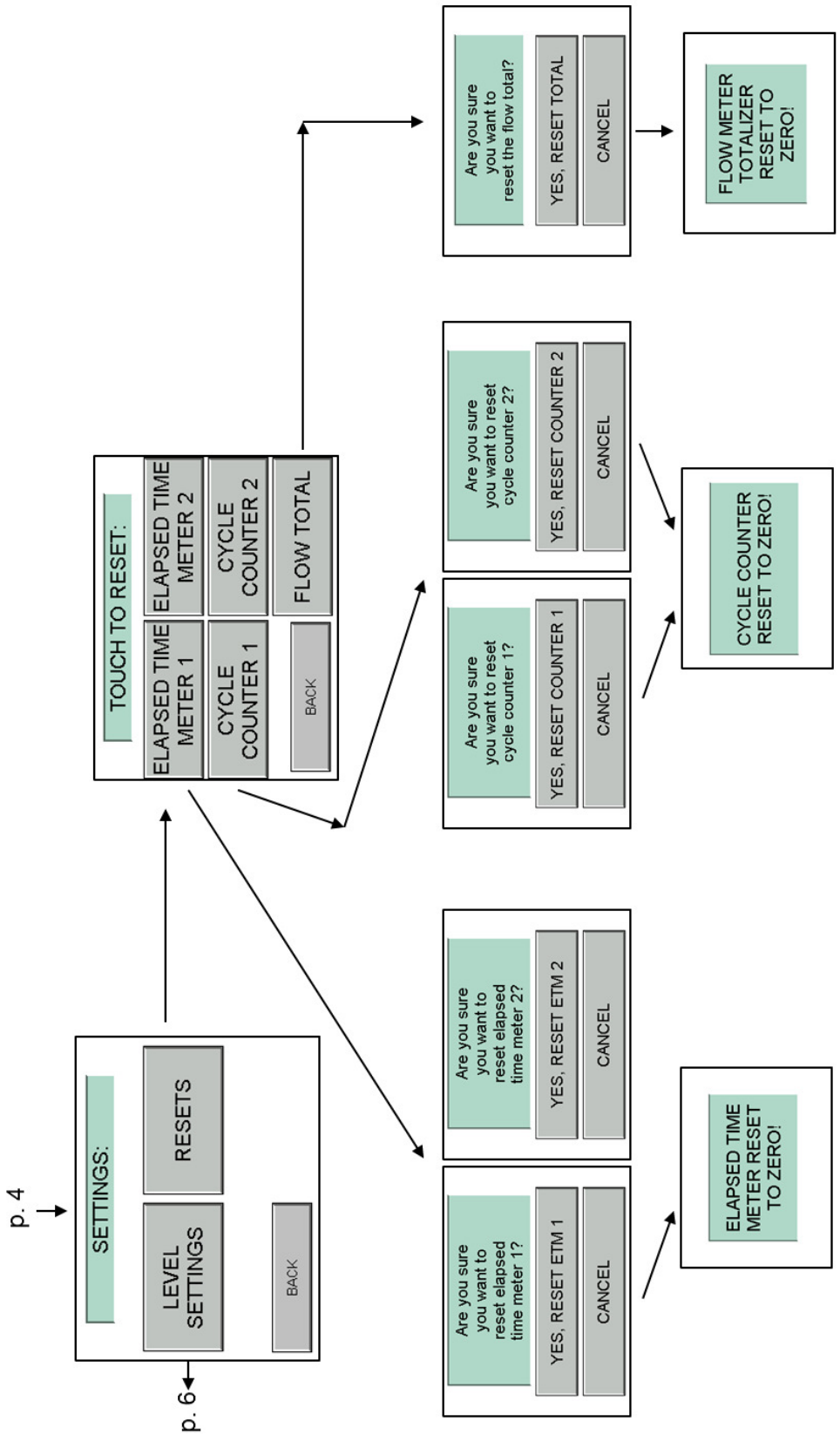

 © 2013 EPG Companies Inc.

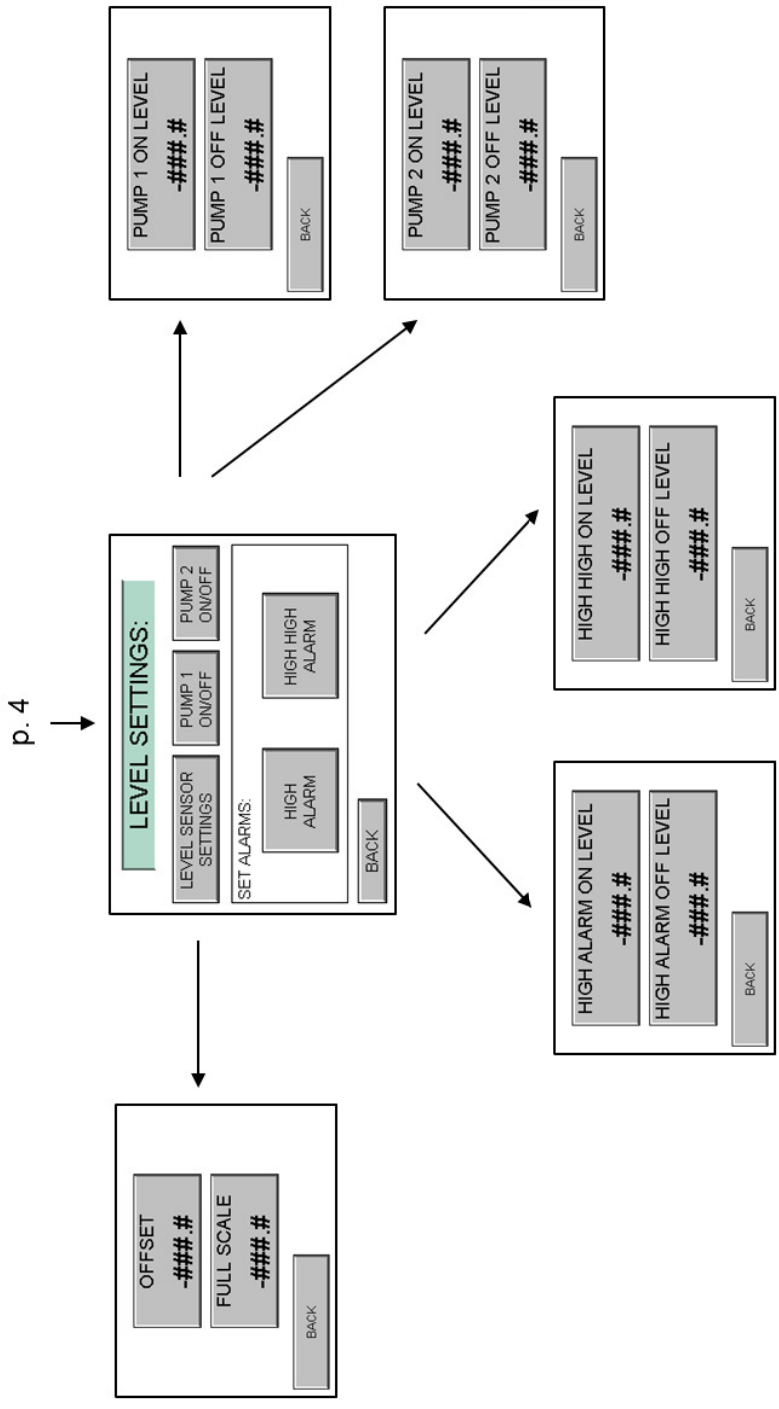

 © 2013 EPG Companies Inc.

TROUBLESHOOTING

SYMPTOM / DISPLAY	PROBABLE CAUSES	HOW TO CORRECT
Continuous above full scale reading (above 139"), or Continuous reading.	If pump has been off for a long period of time, liquid level may actually be quite high.	Reprogram meter if above 150" or pull pump up slightly to initiate pump start.
	Loose connections in circuit.	Repair connections in controller.
	Short circuit in sensor lead wire or connector or circuit.	Inspect for shorted connections at breakout box (junction box) and at controller. If connections are good, replace sensor.
	Faulty sensor.	Replace sensor.
-34.6 reading.	Lead wire damaged or reversed connections.	Check schematic, repair connections.
	Open circuit in sensor lead wire or controller connections.	Replace sensor and lead wire. Test IS barrier and meter with simulator.
	Faulty power supply in meter.	Replace meter.
Erratic readings.	Damaged sensor lead wire.	Check schematic, repair connections.
	Improper connections.	Replace sensor and lead wire.
	Faulty meter.	Test meter with simulator. If faulty meter, replace meter.
Pump starts at normal reading, runs for a few seconds and stops.	Low liquid recovery rate. Screen on pump may be clogged.	Remove pump and clean screen. May also need to disassemble pump and clean pump impellers.
	Sump clogged or plugged.	Remove pump and clean out sump.

 © 2013 EPG Companies Inc.

Operator Control Station – Quick Start Guide

The OCS will turn on as soon as it has power. It takes approximately 30 seconds to boot up and will then be running in normal operation. Follow the steps below to access/check/modify all the settings of the Operator Control Station.

1. Press the "**Settings**" button in the lower left. Press "Enter Passcode Here", and type 2613, then "Enter". This passcode is needed anytime settings are accessed. For reference, this is the last four digits of EPG's phone number (763-424-2613).

2. You are now at the Main Settings screen, showing all categories of settings. (Pressing "Back" from the following screens will return you here.)

3. Press "**Level Settings**". You are now at the Level Settings Screen. From here you can set the Offset and Fullscale of your level sensor (e.g. for a 0-5psi level sensor: Offset is -34.6", Fullscale is 138.4"). You can also set the levels at which the pump will turn on and off. Finally, you can set the levels at which any included alarms will turn on and off. Typically, a one inch hysteresis is recommended (e.g. High Alarm On Level: 50", High Alarm Off Level: 49"). This eliminates rapid cycling of an alarm if the liquid level is very close to the alarm level.

4. Press "**Flow Settings**". You are now at the Flow Settings screen. Depending on the type of signal your flowmeter uses, you will be able to set the Full Flow (4-20ma), R-Scaler (Pulse), or you'll have no setting if your flowmeter is sending the flow reading directly to the OCS via Modbus. You can also clear the totalizer from this menu (unless your flowmeter is directly controlling the totalizing).

5. Press "**Resets**". You are now at the Resets screen. From here you can reset your Elapsed Time Meter and/or Cycle Counter. These keep track of the amount of time the pump has run and the number of times it has started, respectively.

6. Press "**Modbus**" (if included). You are now at the Modbus Settings screen. From here you can set the Modbus address.

7. Press "**Data Logging**" (if included). You are now at the Data Logging Settings screen. From here you can set how much time passes between each data point in minutes. You can also start a new log file and/or a new daily log file.
   IMPORTANT: *The first time you start up the OCS, make sure you set a logging interval greater than zero, and press "Start New Log File" and "Start New Daily File". This will initiate the data logging functionality. More in-depth data logging information can be found on the following page.*

 © 2015 EPG Companies Inc.

Data Logging with the EPG Operator Control Station (OCS), if equipped:

Instructions for Setting up the Data Logging Functionality:

1. During normal operation of the OCS (screens changing automatically every five seconds), press the "Settings" soft button in the lower left corner of the screen.
2. Press "Enter Passcode" and type the default EPG passcode "2613" (last 4 digits of our phone number 763-424-2613), then press "Enter".
3. Select "Data Log Settings" from the main settings screen, and then select "Log Interval (mins)".
4. Type in the desired interval (in minutes) between data points, and press "Enter".
5. The interval will be displayed, and logging will begin automatically. To stop logging, set the interval to "0".
6. To delete the current log file and start fresh, select either "Start New Log File" or "Start New Daily File", and then confirm your decision by pressing "YES" on the following screen.

Instructions for Collecting Logged Data:

Note: Data is logged to the MicroSD card inserted in the OCS itself, and then copied to the external USB flash drive. Therefore, the MicroSD card must never be taken out of the OCS, or the data logging function will be unable to log data.

1. Remove the small USB Flash Drive to the right of the OCS.
2. Insert the USB Flash Drive into any PC.
3. View the contents of the USB Flash Drive, and open the "WRITE.CSV" file with a spreadsheet application (e.g. Microsoft Excel or similar). Open "DAILY.CSV" in the same manner to view the daily logged data (if equipped).
4. Replace the USB Flash Drive in USB slot to the right of the OCS. Because Data is being logged to the MicroSD card, no data points are lost when the USB Flash Drive is away. On the first data point after being reinserted, the USB Flash Drive will be updated with any data logging points that may have occurred while it was away from the panel.

 © 2015 EPG Companies Inc.

Batch Pumping with the EPG Operator Control Station (OCS), if equipped:

Instructions for Setting up the Batching Functionality:

1. During normal operation of the OCS (screens changing automatically every five seconds), press the "Batching" soft button in the corner of the screen.
2. Set the the number of gallons to batch pump by pressing the "Batch Target" and typing in a number of gallons. Then press "Enter".
3. Make sure the Batch Total is at zero. If there is a leftover Batch Total from a previous batching operation, clear it by pressing "Clear".
4. When the "Start" button is pressed, the pump will begin batch pumping. When the batch total reaches the batch target you specified, the pump will automatically shut off.
5. If the pump must be stopped for any reason during the batch pumping operation, simply press the "Stop" button. The Batch Total will hold its place and continue where it left off if the pump is started again.
6. The current flow rate is displayed at all times while on the Batch Pumping screen.
7. When finished, press "Back" to return to normal operation (regular screens changing automatically every five seconds).

NOTE: The Batch Pumping screen does NOT need to be displayed for the batching operation to continue. If the "Back" button is pressed during batch pumping, the batch will continue to pump, and still automatically shut down when the Batch Total reaches the Batch Target.

 © 2015 EPG Companies Inc.

SMS Alarms with the EPG Operator Control Station (OCS), if equipped:

Instructions for Setting up SMS (Text Message) alarm notifications:

1. During normal operation of the OCS (screens changing automatically every five seconds), press the "Settings" soft button in the lower left corner of the screen.
2. Press "Enter Passcode" and type the default EPG passcode "2613" (last 4 digits of our phone number 763-424-2613), then press "Enter".
3. Select "SMS Alarm Phone Numbers" from the main settings screen.
4. Four spaces will be displayed for possible phone numbers. To add a phone number, touch on the desired space, type in a 10-digit phone number (including area code), and press "Enter". Make sure any phone number entered is capable of and willing to receive text messages.
5. When an alarm is triggered, any numbers entered on this screen will automatically get a text message explaining which alarm has occurred.
6. When finished, press "Back" to return to the main settings screen, and press "Back" again to return to normal operation (screens changing automatically every five seconds).

NOTE: EPG Companies Inc is not responsible for costs incurred as a result of text messaging rates charged by cellular service providers

 © 2015 EPG Companies Inc.

EPG Controllers With Intrinsically Safe Circuit(s)

Field Installation Instructions

PURPOSE: Provide instructions to install EPG control panels with Intrinsically Safe (IS) Circuits wired to EPG Level Sensors, EPG Flow Sensors, and Single and Dual Level Float Sensors.

PROCEDURE:
Familiarize yourself with the electrical components and the panel electrical schematics. Read these instructions thoroughly before attempting installation of intrinsically safe circuits. Reference: Installation of intrinsically safe instrument systems in CLASS I HAZARDOUS LOCATIONS, ANSI/ISA-RP 12.6-1987, SECTION 4.5.4.

Install in accordance with Article 504 of the National Electrical Code.

This control panel and its intrinsically safe circuit(s) must be connected to a ground system with very low impedance (1 OHM or less) per NEC 504-50 and 250-50.

See control panel drawings for device wiring. Only simple apparatus (NEC 504-2) and those specifically called out in the controller drawing are to be connected to the intrinsically safe circuit(s). The attached drawings show specific device wiring for level, flow, single level float and dual level float sensors.

Where intrinsically safe circuits enter or exit a hazardous (classified) area, a means must be provided to prevent the passage of gases or vapors per NEC 501-5. A seal device must be installed to conduit entering the enclosure and then filled with appropriate sealant.

Wiring of intrinsically safe circuits shall be physically separated from non-intrinsically safe circuits per NEC 504. Do not run intrinsically safe and non-intrinsically safe circuits in the same conduit.

Do not exceed maximum cable lengths stated in the control panel drawings.

Field wiring supplied by others is to have 600 Volt insulation rating.

Conductors of intrinsically safe circuits must be separated by at least 5" from conductors of any non-intrinsically safe circuits.

If field wiring is terminated in field supplied junction boxes there must be a minimum of 8" between intrinsically safe and non-intrinsically safe field wiring terminals.

Do not substitute parts. Use only the same make, model, and part number as originally supplied.

Replace fuses only with fuses of same type and rating.

 © 2013 EPG Companies Inc.

IS BARRIER - LEVEL SENSOR

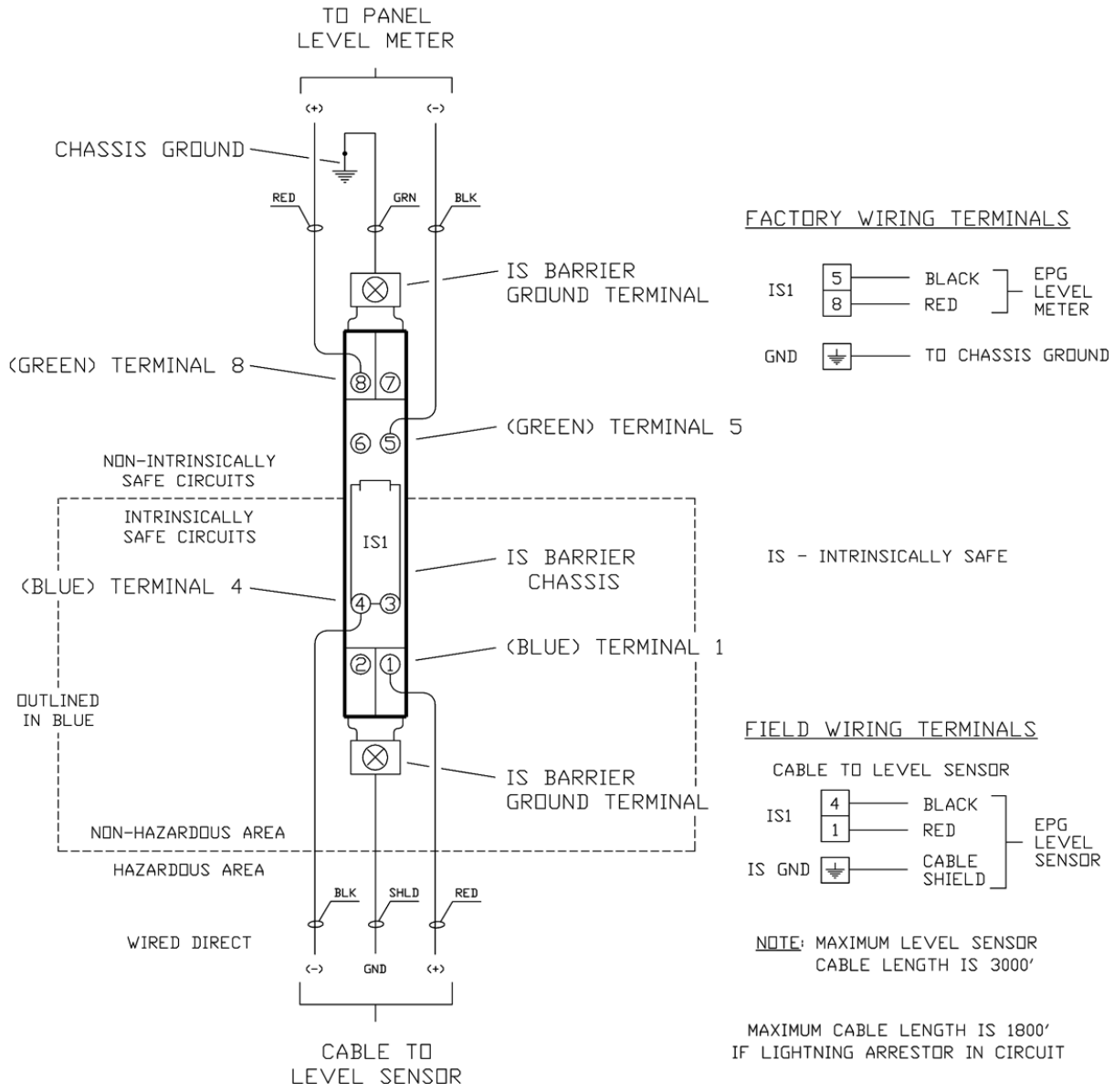

NOTE: 1. PROVIDES INTRINSICALLY SAFE CIRCUIT EXTENSIONS FOR USE IN CLASS 1 GROUPS C & D HAZARDOUS LOCATIONS WHEN CONNECTED PER EPG BULLETIN 8000B.
2. REFERENCE INSTALLATION OF INTRINSICALLY SAFE SYSTEMS IN CLASS 1 HAZARDOUS LOCATIONS, ANSI/ISA-RP 12.6-1987, SECTION 4.5.4.
3. WARNING SUBSTITUTION OF COMPONENTS MAY IMPAIR INTRINSIC SAFETY.
4. INSTALL IN ACCORDANCE WITH ARTICLE 504 OF THE NATIONAL ELECTRICAL CODE.
5. MAXIMUM CABLE LENGTH TO EPG LEVEL SENSOR IS 3000 FEET. MAXIMUM LENGTH IS 1800 FEET IF LIGHTNING ARRESTOR IN LEVEL SENSOR CIRCUIT.

 © 2013 EPG Companies Inc.

IS BARRIER - FLOW SENSOR

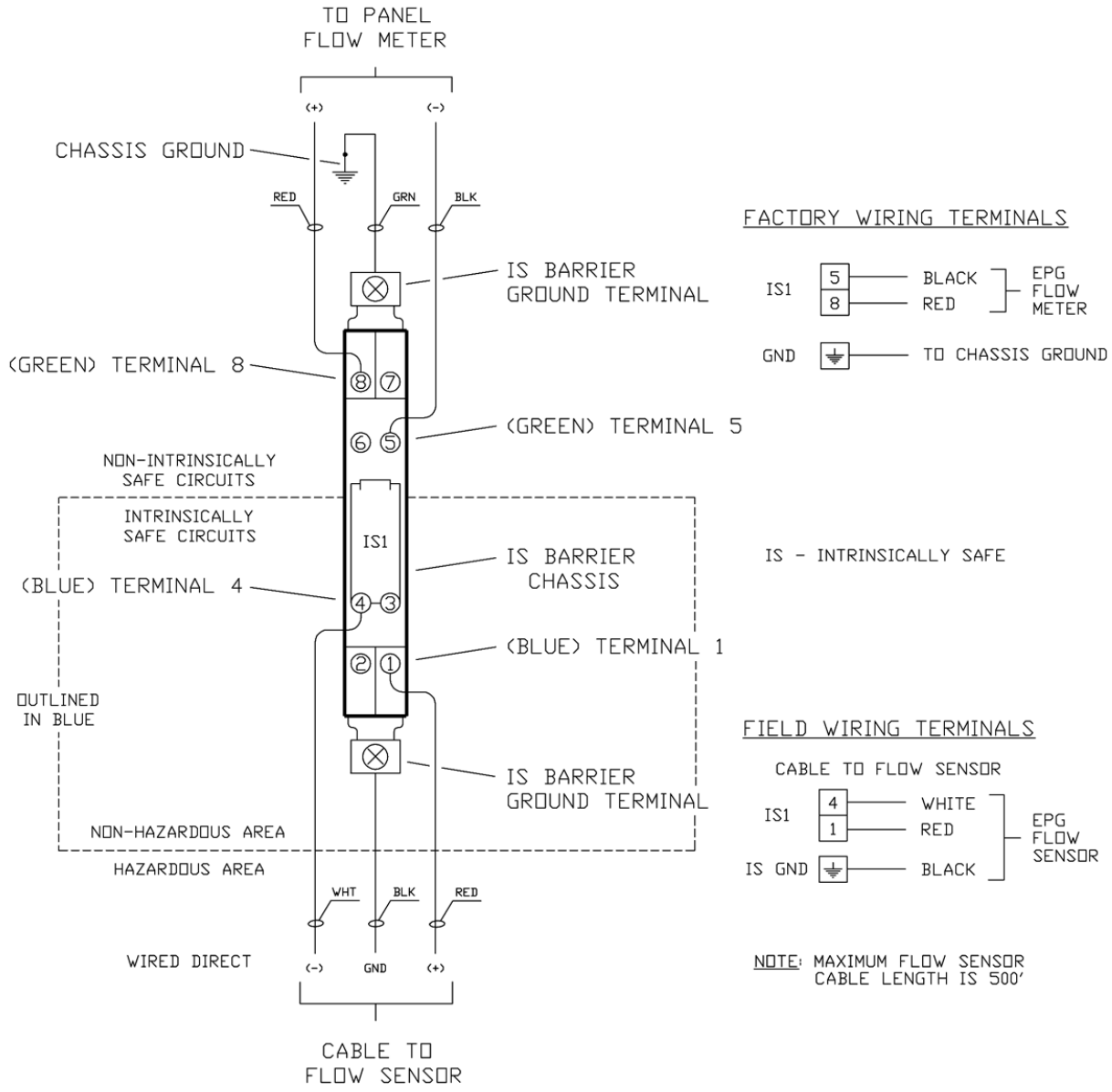

NOTE:
1. PROVIDES INTRINSICALLY SAFE CIRCUIT EXTENSIONS FOR USE IN CLASS 1 GROUPS C & D HAZARDOUS LOCATIONS WHEN CONNECTED PER EPG BULLETIN 8000B.
2. REFERENCE INSTALLATION OF INTRINSICALLY SAFE SYSTEMS IN CLASS 1 HAZARDOUS LOCATIONS, ANSI/ISA-RP 12.6-1987, SECTION 4.5.4.
3. WARNING SUBSTITUTION OF COMPONENTS MAY IMPAIR INTRINSIC SAFETY.
4. INSTALL IN ACCORDANCE WITH ARTICLE 504 OF THE NATIONAL ELECTRICAL CODE.
5. MAXIMUM CABLE LENGTH TO EPG FLOW SENSOR IS 500 FEET.

 © 2013 EPG Companies Inc.

I.S. RELAY BARRIER - SINGLE LEVEL

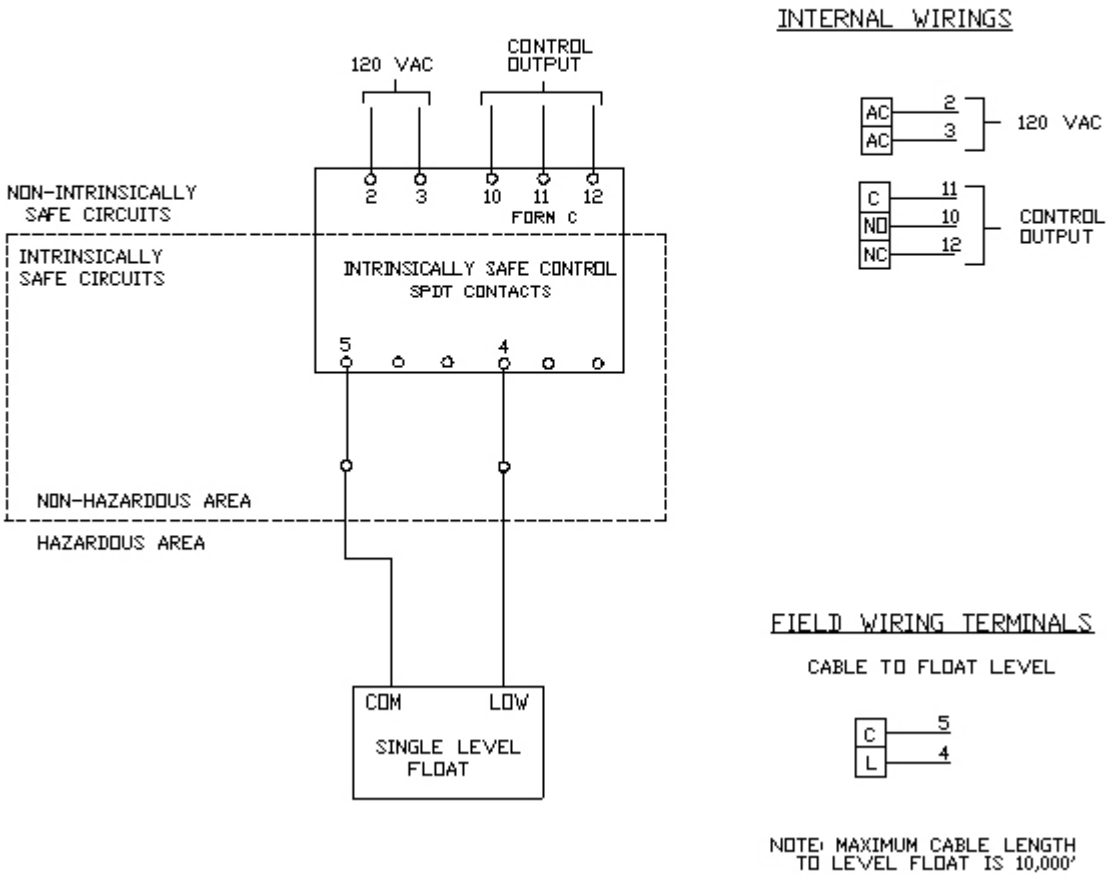

NOTE: 1. PROVIDES INTRINSICALLY SAFE CIRCUIT EXTENSIONS FOR USE IN CLASS 1 GROUPS A, B, C, & D HAZARDOUS LOCATIONS WHEN CONNECTED PER EPG BULLETIN 8000B
2. REFERENCE INSTALLATION OF INTRINSICALLY SAFE INSTRUMENT SYSTEMS IN CLASS 1 HAZARDOUS LOCATIONS, ANSI/NFPA 70
3. WARNING SUBSTITUTION OF COMPONENTS MAY IMPAIR INTRINSIC SAFETY.
4. INSTALL IN ACCORDANCE WITH ARTICLE 504, 2011 OF THE NATIONAL ELECTRICAL CODE
5. MAXIMUM CABLE LENGTH TO LEVEL FLOAT SENSOR IS 10,000 FEET

 © 2013 EPG Companies Inc.

I.S. RELAY BARRIER - DUAL LEVEL

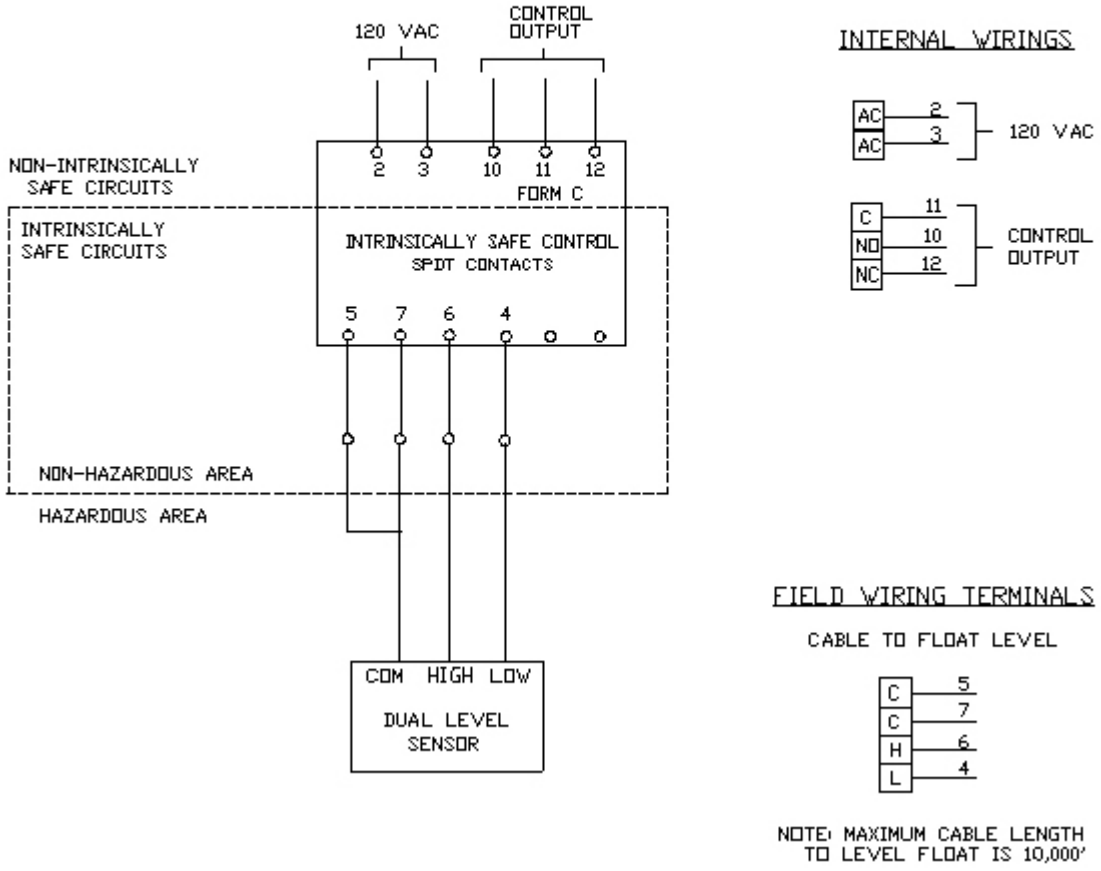

NOTE: 1. PROVIDES INTRINSICALLY SAFE CIRCUIT EXTENSIONS FOR USE IN CLASS 1 GROUPS A, B, C, & D HAZARDOUS LOCATIONS WHEN CONNECTED PER EPG BULLETIN 8000B
2. REFERENCE INSTALLATION OF INTRINSICALLY SAFE INSTRUMENT SYSTEMS IN CLASS 1 HAZARDOUS LOCATIONS, ANSI/NFPA 70
3. WARNING SUBSTITUTION OF COMPONENTS MAY IMPAIR INTRINSIC SAFETY.
4. INSTALL IN ACCORDANCE WITH ARTICLE 504, 2011 OF THE NATIONAL ELECTRICAL CODE
5. MAXIMUM CABLE LENGTH TO LEVEL FLOAT SENSOR IS 10,000 FEET

 © 2013 EPG Companies Inc.

S3070-PT TRANSDUCER SIMULATOR
Operation

The model 3070-PT Transducer Simulator is a device designed for testing an EPG LevelMaster™ level controller circuit while temporarily bypassing the existing level sensor.

In the "Run" (normal operation) mode liquid level in the sump applies pressure on the level sensor. The sensor converts that force into an electrical signal. The electrical signal is transmitted by the sensor cable to the level meter where it is converted into a liquid level display.

The "Test" mode simulates a level sensor signal. Rotating the potentiometer changes the electrical signal forcing the system to function as if a level sensor were in the circuit. Varying the electrical signal changes the level meter display in the same manner in which the level sensor signal would effect the system. By turning the simulator knob slowly clockwise from top to bottom the meter will display each set point such as start, stop and alarms. With the toggle switch turned back to the "Run" position the potentiometer is removed from the circuit and the level sensor controls according to the set points. Meter values register actual liquid level.

"**CAUTION"**, care must be taken when using this device in "Test" mode to avoid damaging the motor by running it dry. In normal test mode the pump switch should be turned to OFF.

 © EPG Companies Inc. 2024

S3070-PT TRANSDUCER SIMULATOR
Test Procedure

1. When the toggle switch is in the "Run" position the controls should function normally.

2. When the toggle switch is in the "Test" position (pressure transducer temporarily removed from he control circuit) the level meter should display the liquid level. By turning the simulator knob slowly clockwise from top to bottom the meter will display each set point such as start, stop, and alarms. Care must be taken when using this device in the "Test" mode to avoid damaging the motor by running it dry. In normal test mode the pump switches should be off.

3. Make sure that the potentiometer has full travel (270 degrees maximum) in both clockwise and counter-clockwise directions.

4. Make sure that all of the wires on the rear of the simulator (wires 200, 201, 202, 203) are connected in the proper position.

5. Replace the transducer simulator if it does not function as described above.

 © EPG Companies Inc. 2024

BJBGE-100B

GAS EFFECT BREAKOUT JUNCTION BOX FOR LEVEL SENSOR

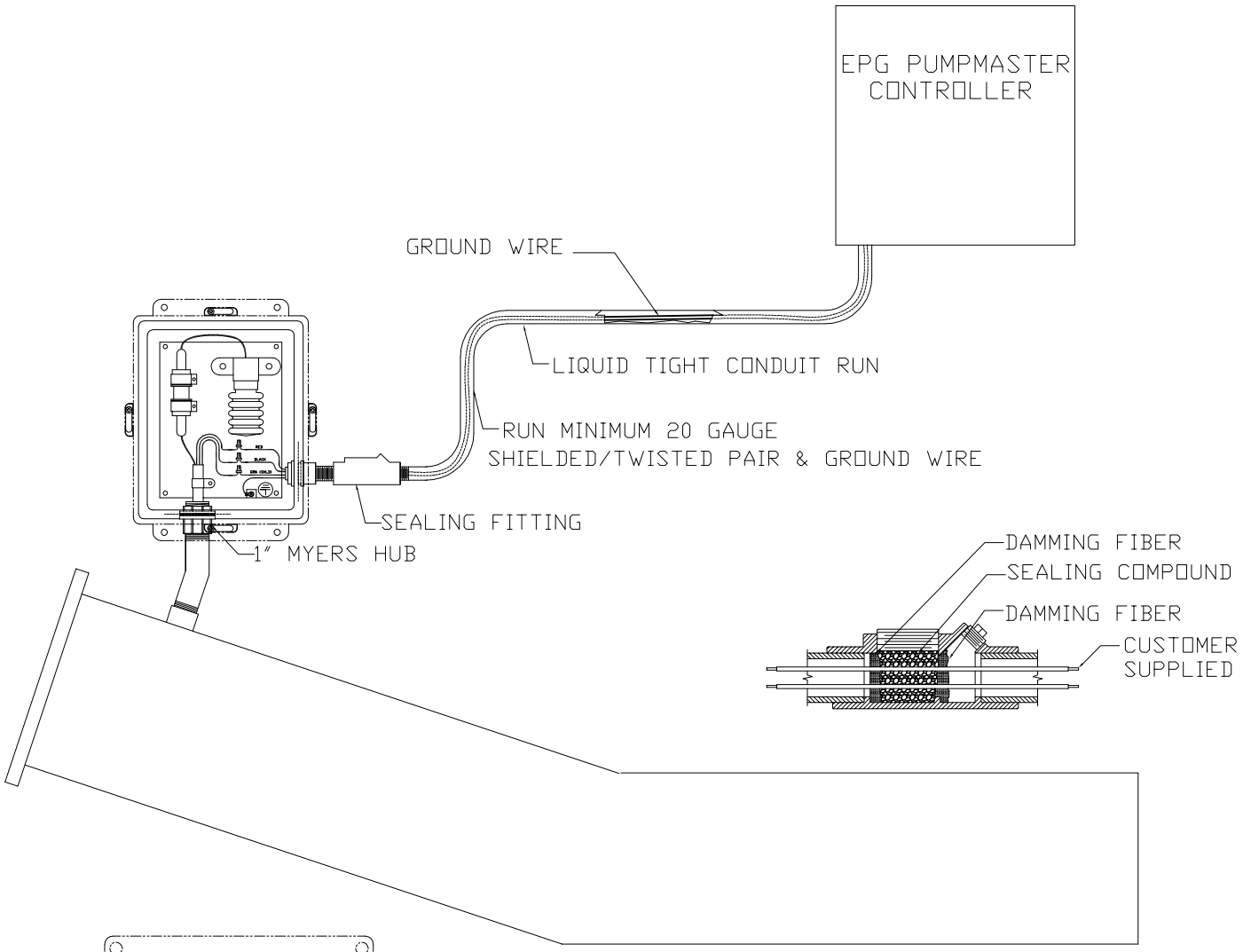

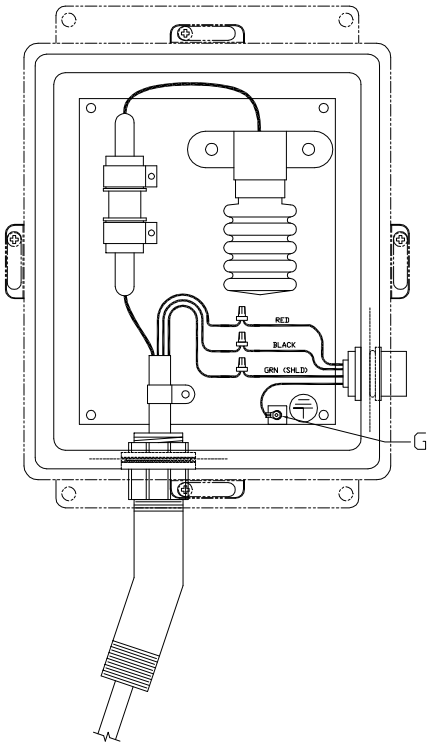

NOTE: AT LEAST ONE MYERS HUB MUST BE INSTALLED TO THE BOTTOM SIDE (AS MOUNTED) OF THE BJBGE-100B BREAKOUT BOX TO AVOID THE BUILD UP OF CONDENSATION. (AS SHOWN)

* NOTICE * © 2012 EPG Companies Inc.

REFERENCE

TOLERANCES (EXCEPT AS NOTED)	REVISIONS NO.	DATE	BY
DECIMAL ±	1	08-06-12	JRT
	2	08-15-12	JRT
FRACTIONAL ±	3	01-08-13	JRT
ANGULAR ±	4	04-10-14	MEF
	5		

EPG COMPANIES

TYPICAL INSTALLATION

DESIGN	EJH	SCALE	NONE	MATERIAL
DRAWN	EJH	DATE	06-14-12	DRAWING NO.
CHK'D	DGL	APP'D		09650-0000

BJBP500

BREAKOUT JUNCTION BOX FOR MOTOR LEAD

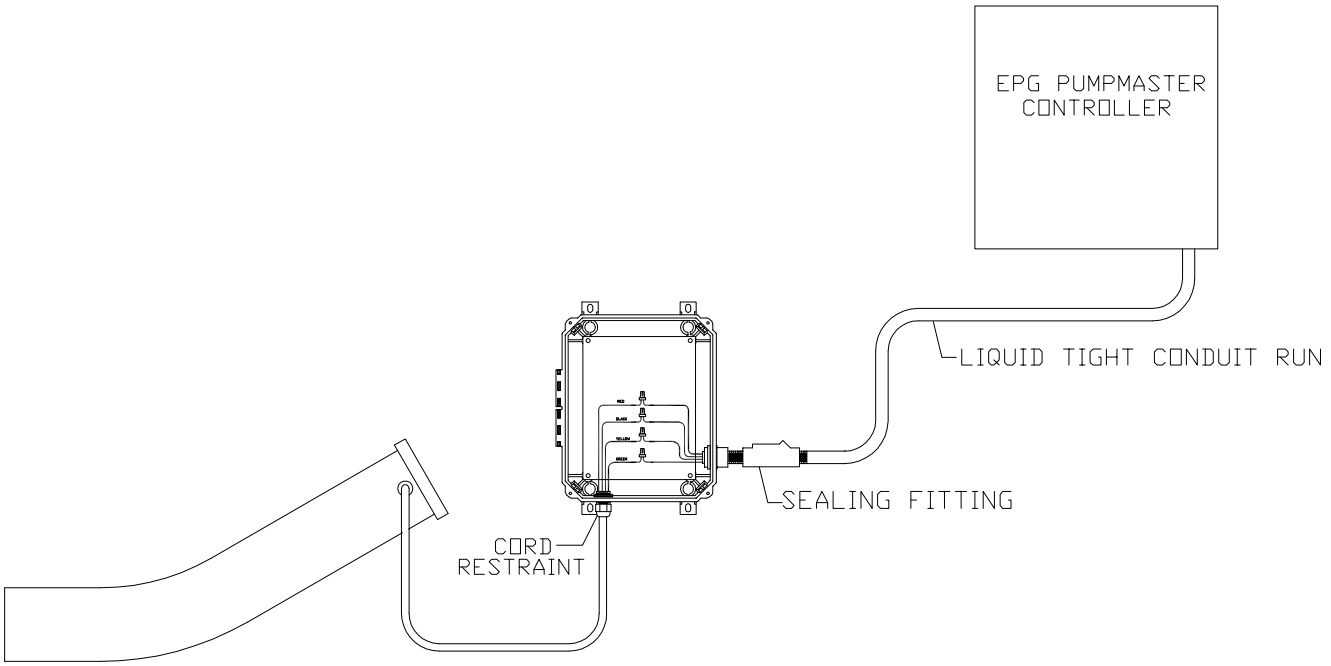

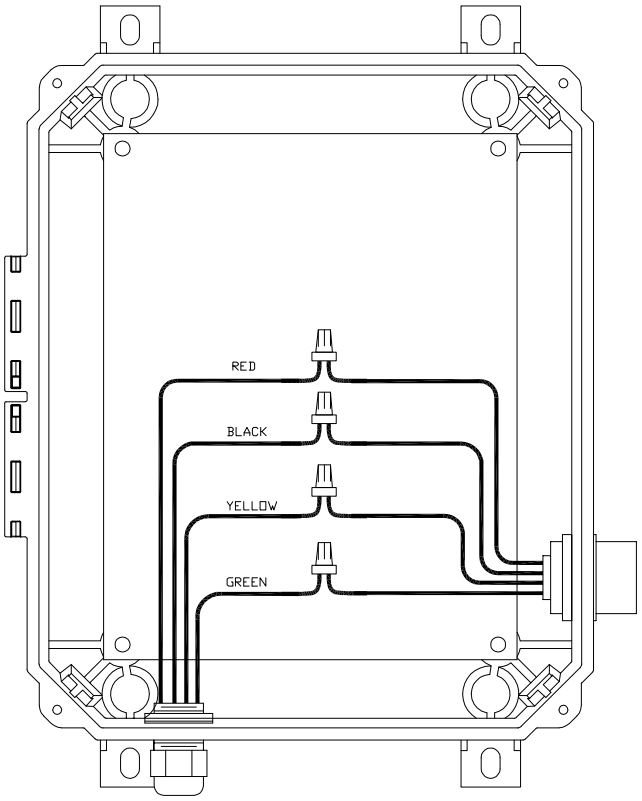

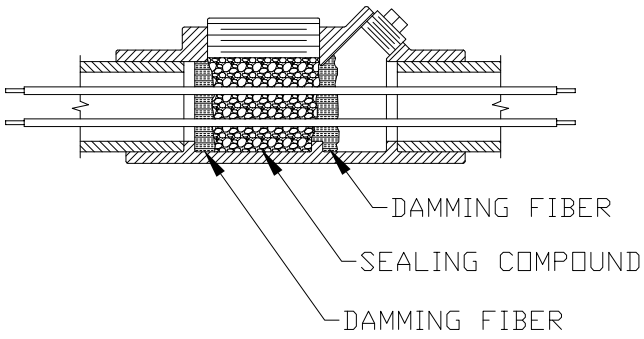

NOTE:

BOX DIMENSIONS (OUTER WALL):
10 3/4" X 8 3/4" X 6"

MOUNTING HOLES FOR 5/16" BOLT/SCREW,
12 1/8" X 6" CENTER TO CENTER, 4 PL.

* NOTICE * © EPG Companies Inc. 2002

REFERENCE

TOLERANCES (EXCEPT AS NOTED)	REVISIONS NO.	DATE	BY
DECIMAL ±	1		
FRACTIONAL ±	2		
ANGULAR ±	3		
	4		
	5		

EPG COMPANIES

TYPICAL INSTALLATION

DESIGN	SCALE NONE	MATERIAL
DRAWN U.E.V.	DATE 05/07/02	DRAWING NO. 03626-0500
CHK'D	APP'D	

Model NW Stainless Steel Discharge Adapter

For Leachate, Monitoring, and Remediation Piping Applications

MODEL	"A"	"B"	"C"	Minimum I.D.	Weight (lbs.)
NW1.5SS-C	1.5" NPT	4"	1.5” NPT	8"	8
NW2SS-C	2" NPT	5"	2” NPT	8"	12
NW3SS	3" NPT	6.25"	1.5” NPT	12"	26
NW4SS	4" NPT	8.125"	4” NPT	12"	33
NW6SS	6” NPT	11.5”	3” NPT	18”	50

- 316 stainless steel construction for “C” models. All others are 304 Stainless Steel
- Insert and housing are tapered for easy installation and removal
- Viton® O-Ring seal
- EPDM gasket for inner and outer wall seal
- Extended length nipple on housing allows adapter to fit from 1/4" to 4" thick wall pipe
- 1.5", 2", 3", 4", 6” NPT sized fittings for pump pipe, lift out pipe and discharge pipe
- Tested to 300 PSIG

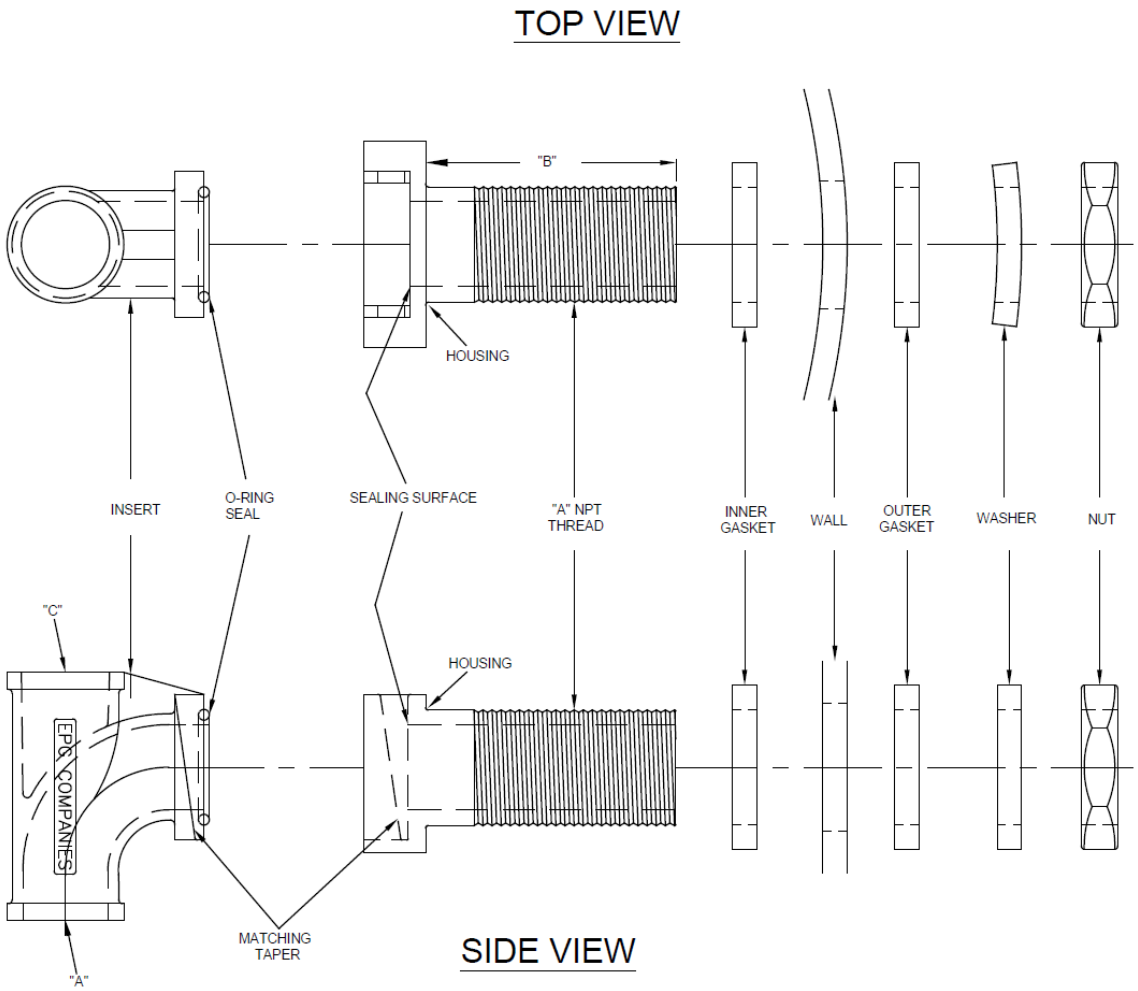

© 2023 EPG Companies Inc.

Installation Instructions - NW Disconnect

For Leachate, Monitoring, and Remediation Pumping Applications

- Using correctly sized hole saw, drill thru one wall of the riser in alignment with the force main.
- Install inner gasket on the threaded NW tail.
- Install the NW tail thru hole in riser.
- Install outside gasket, backup washer & locknut, tighten lock nut until the NW tail is secure.
- Lubricate the o-ring and install into the o-ring groove in the NW head.

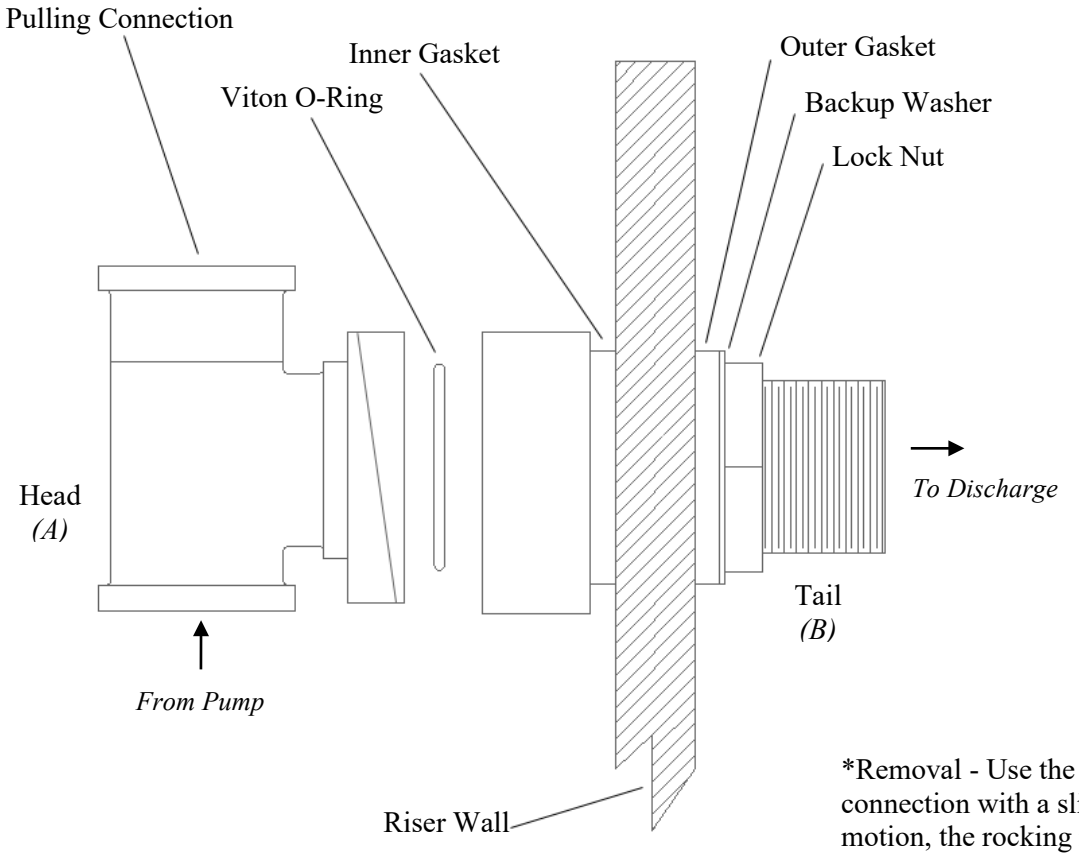

*Removal - Use the pulling connection with a slight rocking motion, the rocking motion helps unseat the taper.

MODEL	"A"	"B"	Hole Saw Size
NW1.5SS-C	1-1/2" NPT	1-1/2" NPT	2"
NW2SS-C	2" NPT	2" NPT	2-1/2"
NW3SS	3" NPT*	3" NPT	3-5/8"
NW4SS	4" NPT	4" NPT	4-3/4"
NW6SS	6” NPT*	6” NPT	6-3/4”

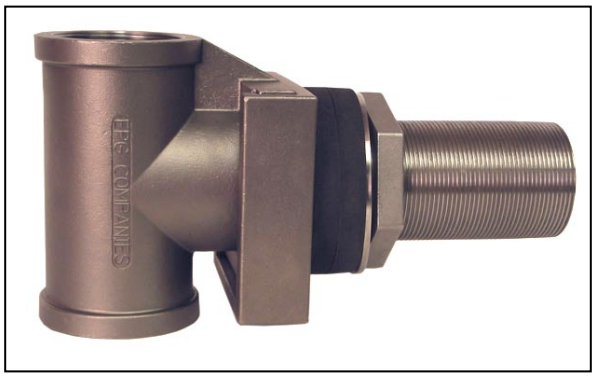

** Indicates Model Has 1.5” Pulling Connection*

© 2023 EPG Companies Inc.

VALVE
DATA SHEET

2” MNPT Combination Air Release Valve

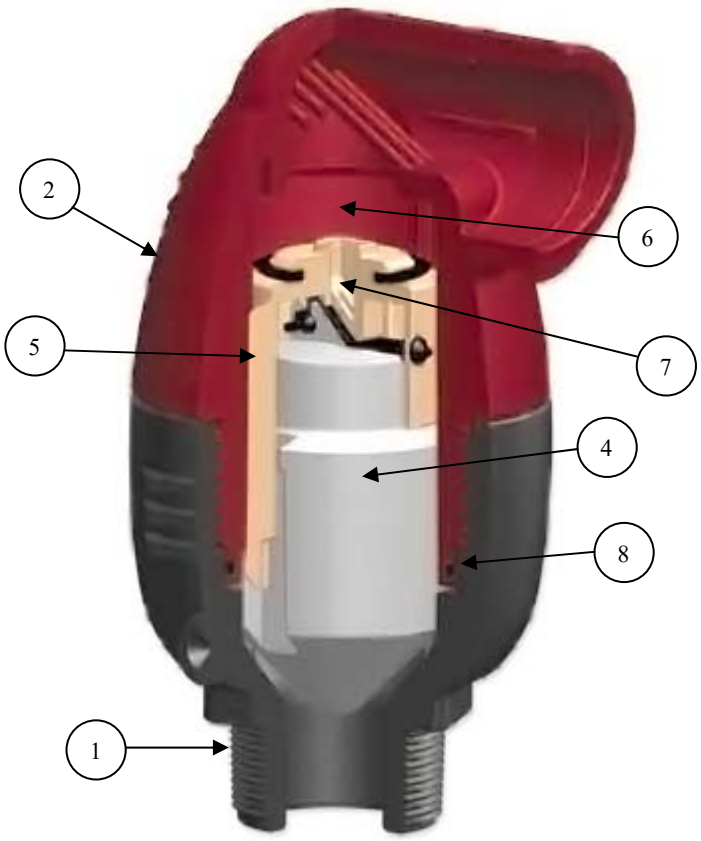

Model AVR200

Air and Vacuum Release Valve

Parts List	Material
1) Base NPT	Glass Reinforced Nylon
2) Body	Glass Reinforced Nylon
3) Down Outlet	Polypropylene
4) Float	Polypropylene
5) Kinetic Plug	Glass Reniforced Nylon
6) Kinetic Orifice	EPDM
7) Automatic Orifice	EPDM
8) O-Ring	EPDM

Specifications

Height: 9-1/16”
Width: 5-5/8”
Valve Vent: 2”
Valve Base: 2” MNPT





Down outlet and connection (1-1/2” FNPT) to drainage pipe

VALVE LOGIC AND FUNCTION

The majority of pipeline systems require both air and vacuum valves and air release valves to provide pipeline protection and efficiency. The innovative design of this kinetic float provides a perfect combination of these two functions in one compact unit. The AVR200 releases large volumes of air from a filling pipeline, closes when the pipeline is filled, and reopens to admit large volumes of air should pipeline pressure drop. It features a unique kinetic shield to isolate the kinetic float from the air flow and prevent it from being blown closed. The inverted “U” kinetic float, however, is modified to include a small orifice and the automatic float which work together to release the accumulated air pockets in pressurized operating systems.

© 2016 EPG Companies Inc.

Switch-Tek™ LO10

Optic Liquid Leak Detection Switch

FLOWLINE™ LEVEL BEST

Application

The general purpose optic leak switch provides leak detection in and around secondary containment sumps, tanks and piping systems with a 1A relay output. Media examples include sulfuric acid and sodium hypochlorite. The submersible PP or PFA leak switch sensor is mounted through the containment wall or within the interstitial space, and connected to a PLC or relay controller.

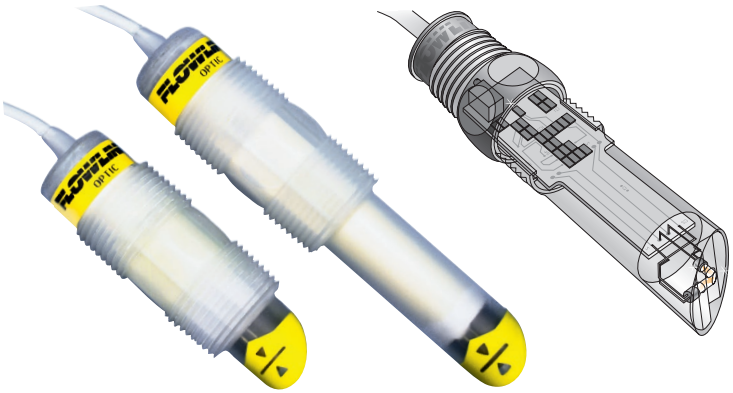

Features

- Rugged polypropylene or PFA Teflon® sensor and cable for corrosive liquids
- 60VA SPST relay selectable NO or NC via power supply wiring polarity
- Sensor may be located up to 1000’ from a Flowline relay controller

Key Benefits

- Fail-safe leak sensor inverts “wet” to alert user for maintenance
- Submersible sensor and cable designed for insertion within a secondary containment wall
- Requires only a small amount of liquid to detect the presence of a leak

Compatible Products



LC4X

SWITCH-PRO™

Remote Level Controller

The general purpose remote level controller is offered in two configurations for leak alarm and/or pump or valve shut off. The LC40 accepts one leak sensor input and with one 10A relay ouput. The LC42 accepts two leak sensor inputs with two 10A relay outputs. For field mount installation, add a single or dual indicator NEMA box.



LC10

SWITCH-PRO™

Compact Level Controller

The general purpose compact level controller mounts directly on the sensor for leak alarm and/or pump or valve shut off. The LC10 accepts one leak sensor input with one 16A relay output. The optional flash alarm brings attention to alarm conditions. The controller may also be mounted on the top of Switch-Pak fitting with the leak sensor mounted on the bottom of the fitting.

Switch-Tek™ LO10

Optic Liquid Leak Detection Switch

FLOWLINE™ LEVEL BEST

Specifications

Orientation:	Universal
Accuracy:	± 1mm in water
Repeatibility:	± 0.5mm in water
Supply voltage:	12-36 VDC
Consumption:	25 mA maximum
Contact type:	(1) SPST relay
Contact rating:	60 VA, 1A maximum
Contact output:	Selectable NO / NC
Process temp.:	F: -40° to 176°
	C: -40° to 80°
Pressure:	150 psi (10 bar) @ 25° C, derated @ 1.667 psi (0.113 bar) per °C above 25° C
Sensor rating:	-1XX5: NEMA 6 (IP68)
	-2XX5: NEMA 4X (IP65)
Sensor material:	-1XX5: PP
	-2XX5: PFA
Cable jack. mat.:	-1XX5: PP
	-2XX5: PFA
Cable type:	4-conductor, shielded #22 AWG
Cable length:	10’ (3m)
Process mount:	3/4” NPT (3/4” G / Rp)
Mount. gasket:	Viton® (G version only)
Classification:	General purpose
Compliance:	CE

Dimensions

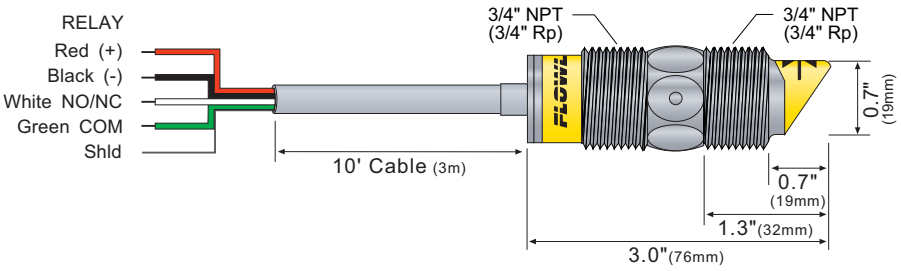

Fittings









P/N	DESCRIPTION
Switch-Pak™ Fitting Components	
LM45-7001	2” NPT plug fitting, 3/4” NPT nipple, PVC
LM45-1001	2” NPT plug fitting, 3/4” NPT nipple, PP
LM45-5001	2” NPT plug fitting, 3/4” NPT nipple, PVDF
Smart Trak™ Fitting Components	
LM10-1201	2’ track, 2” NPT plug fitting, 3/4” NPT nipple, PP
LM10-1401	4’ track, 2” NPT plug fitting, 3/4” NPT nipple, PP
LM10-1601	6’ track, 2” NPT plug fitting, 3/4” NPT nipple, PP
LM10-1801	8’ track, 2” NPT plug fitting, 3/4” NPT nipple, PP
LM10-1001	10’ track, 2” NPT plug fitting, 3/4” NPT nipple, PP
LM10-1101	1m track, 2” NPT plug fitting, 3/4” NPT nipple, PP
LM10-1301	2m track, 2” NPT plug fitting, 3/4” NPT nipple, PP
LM10-1701	3m track, 2” NPT plug fitting, 3/4” NPT nipple, PP
Smart Trak™ Level Switch Car Kit	
LM30-1001	Level switch car kit, 3/4” NPT, PP
LM30-1061	Level switch car kit, 3/4” Rp, PP
Side Mount Bracket	
LM50-1001	2” NPT bracket, PP

Ordering

LO10 - [ ] [ ] [ ] 5

SENSOR MATERIAL (1)
- **1** PP
- **2** PFA

SENSOR LENGTH
- **3** Short
- **4** Long

PROCESS MOUNT (2)
- **0** NPT (US)
- **2** G / Rp (Metric)

NOTES

1) To special order a 25’ (7.6m) or 50’ (15.2 m) level sensor cable, place the cable length at the end of the part number (ie: LO10-1305-25’). For PP, add $50 for 25’ (7.6m) or $100 for 50’ (15.2m) to the price. For PFA, add $200 for 25’ (7.6m) or $400 for 50’ (15.2m) to the price.
2) The short Metric level sensor has conical Rp threads on both sides of the wrench flat. The long Metric level sensor has straight G threads on the sensing side, and conical Rp threads on the cable side of the wrench flat.

© 2024 Flowline | 10500 Humbolt Street, Los Alamitos, CA 90720 USA **p** 562.598.3015 **f** 562.431.8507 **w** flowline.com

TSURUMI PUMP

VANCS - SERIES - PU
(FRP) SEMI-VORTEX - SEWAGE & WASTEWATER PUMPS

PERFORMANCE CURVE

MODEL	BORE	HP	KW	RPM	SOLIDS DIA	LIQUID	SG.	VISCOSITY	TEMP.
50PU(A/W)2.4S -62	2" / 50mm	0.54	0.40	3397	1.38" / 35mm	Water	1.0	1.123 cSt.	60°F

PUMP TYPE	PHASE	VOLTAGE	AMPERAGE	HZ	STARTING METHOD	INS. CLASS
Semi-Vortex - Sewage & Wastewater	Single	115 / 230	5.8 / 2.9	60	Capacitor-Start	E

CURVE No.	DATE	PHASE	VOLTAGE	AMPERAGE	HZ	STARTING METHOD	INS. CLASS
-	-	-	-	-	-	-	-

REMARKS:
FLOATS (2)

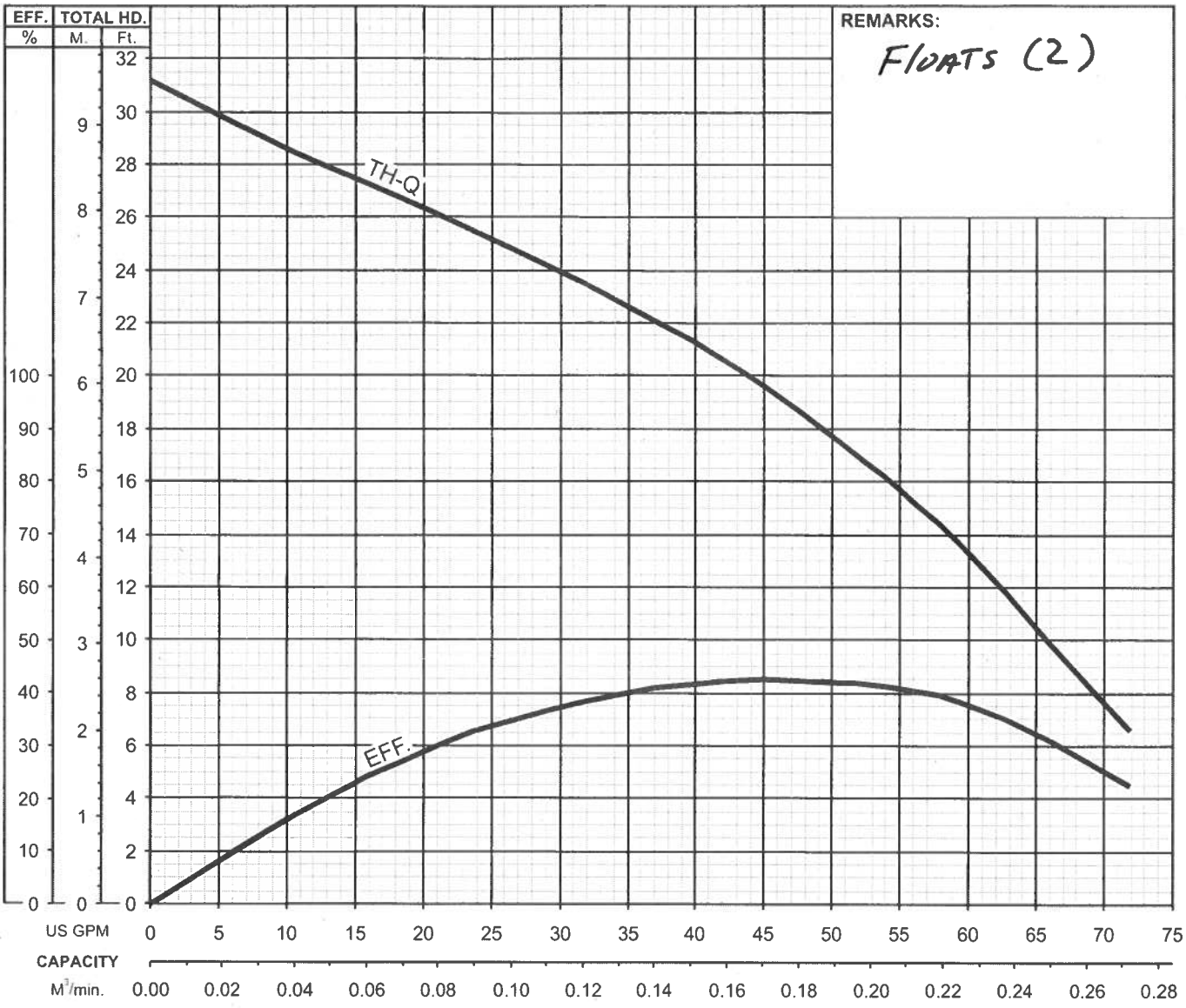

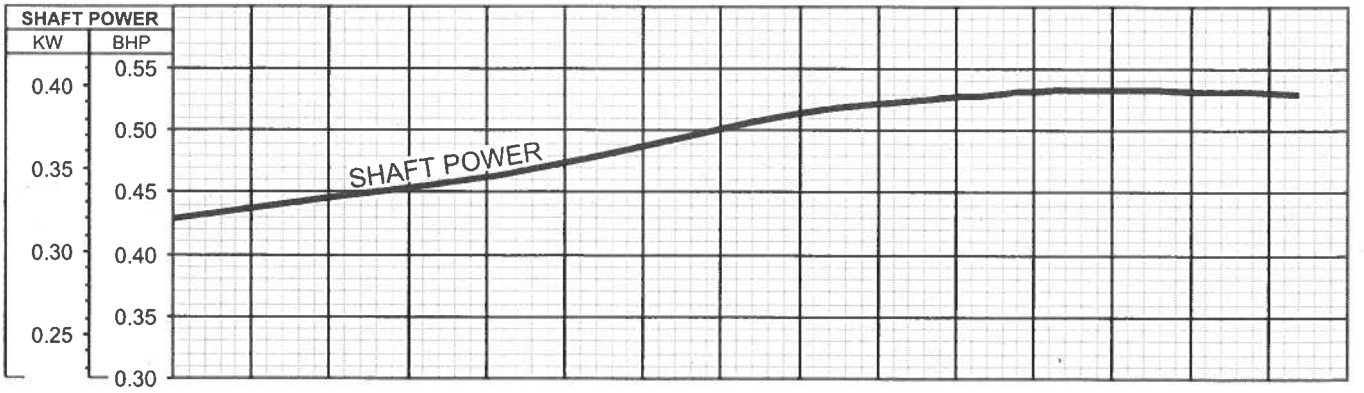

TSURUMI PUMP

VANCS-SERIES - PU
(FRP) SEMI-VORTEX - SEWAGE & WASTEWATER PUMPS

DIMENSIONS

50PU2.25S-62
50PU2.25-62
50PU2.4S-62
50PU2.4-62
50PU2.75S-62
50PU2.75-62

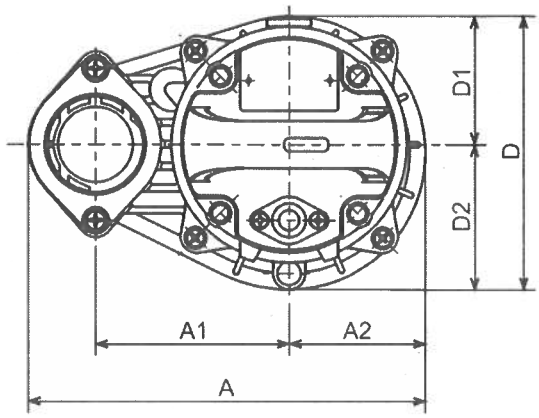

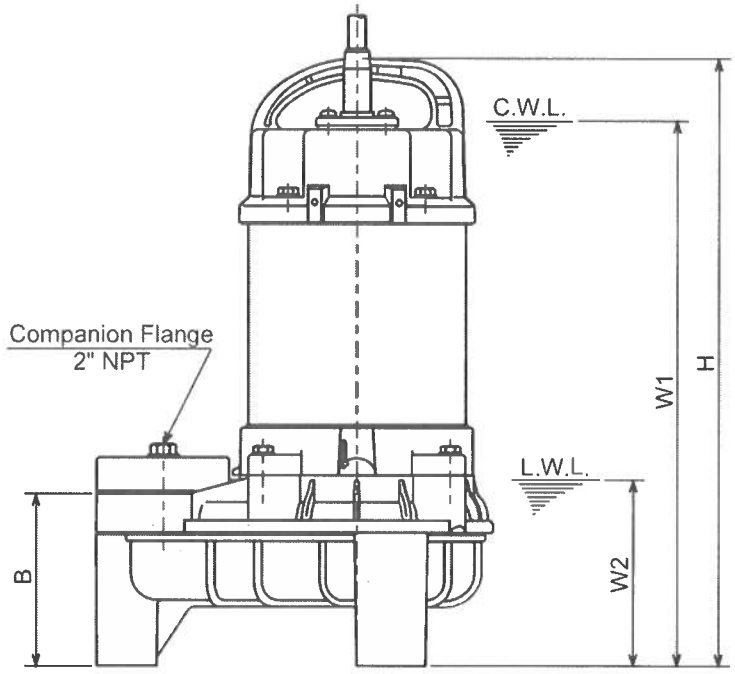

C.W.L. :Continuous running Water Level
L.W.L. :Lowest running Water Level

DIMENSIONS:USCS (Inch)

Model	HP	NOM. SIZE	Pump & Motor								C.W.L.	L.W.L.	Wt.
			A	A1	A2	B	D	D1	D2	H	W1	W2	(lbs.)
50PU2.25S-62	1/3	2"	9 5/16	4 1/2	3 3/16	4	6 3/8	3	3 3/8	14 3/16	12 3/4	4 3/8	15.6
50PU2.25-62	1/3	2"	9 5/16	4 1/2	3 3/16	4	6 3/8	3	3 3/8	13 3/4	12 1/4	4 3/8	13.4
50PU2.4S-62	1/2	2"	9 5/16	4 1/2	3 3/16	4	6 3/8	3	3 3/8	14 3/16	12 3/4	4 3/8	15.6
50PU2.4-62	1/2	2"	9 5/16	4 1/2	3 3/16	4	6 3/8	3	3 3/8	14 3/16	12 3/4	4 3/8	15.4
50PU2.75S-62	1	2"	9 5/16	4 1/2	3 3/16	4	6 3/8	3	3 3/8	14 15/16	13 5/8	4 3/8	19.6
50PU2.75-62	1	2"	9 5/16	4 1/2	3 3/16	4	6 3/8	3	3 3/8	14 3/4	13 3/8	4 3/8	18.3

DIMENSIONS:METRIC (mm)

Model	kW	NOM. SIZE	Pump & Motor								C.W.L.	L.W.L.	Wt.
			A	A1	A2	B	D	D1	D2	H	W1	W2	(kg)
50PU2.25S-62	0.25	50	236	115	81	102	162	76	86	360	325	110	7.1
50PU2.25-62	0.25	50	236	115	81	102	162	76	86	349	310	110	6.1
50PU2.4S-62	0.40	50	236	115	81	102	162	76	86	360	325	110	7.1
50PU2.4-62	0.40	50	236	115	81	102	162	76	86	360	325	110	7.0
50PU2.75S-62	0.75	50	236	115	81	102	162	76	86	380	345	110	8.9
50PU2.75-62	0.75	50	236	115	81	102	162	76	86	374	340	110	8.3

Selection Table

Category	Series	Discharge Bore mm	Impeller	Model	Motor Output kW 0.15	0.25	0.4	0.75	1.5	2.2	3.7
Sewage	PU	40 – 80	Vortex	Standard Automatic Auto-alternation							
Wastewater	PN	40 – 80	Vortex	Standard Automatic Auto-alternation							
Wastewater -High Head-	PSF	40 – 65	Closed	Standard Automatic Auto-alternation							
Wastewater -Horizontal-	PLS	50	Vortex	Standard							
Seawater	TM	40 – 80	Vortex	Standard Automatic							
Wastewater -Economic-	OM	32	Vortex	Standard Automatic							

Model Number Designation *excluding OM-series

Name of the series
Discharge bore in mm
Number of poles of the motor
Rated motor output in kW

40 PU A 2 .25 S

Operation sub code
None : None automatic operation
A : Automatic operation
W : Auto-alternation operation

Phase
None : Three-phase
S : Single-phase

Guide Rail Fitting System (PU, PN, PSF series only)

The TOK type guide rail fitting system connects the pump to and from the piping easily just by lowering and hoisting the pump, allowing easy maintenance and inspection without the need to enter the sump.
Made of high-quality resin, the TOK is designed for lightweight, small to middle sized pumps.

Accessories

- Duckfoot Bend
- Guide Hook
- Guide Support with Bolts & Nuts
- Lifting Chain with Shackles
  (4m for TOK4-P, 5m for TOK2-65 / 65T)

Guide Rail Fitting Operation

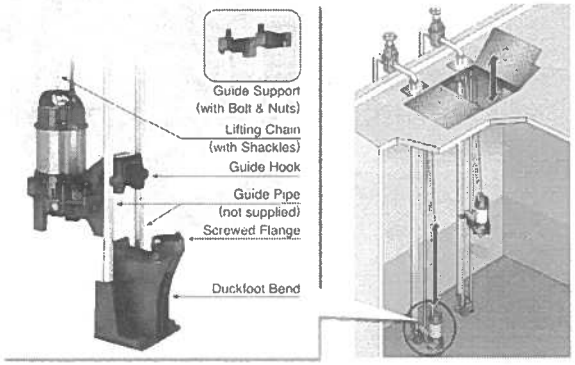

Automatic & Auto-alternation Model

Tsurumi offers an automatic alternation system by a duplex pump comprising an automatic model "A" unit and auto-alternation model "W" unit. The "A" unit is a stand-alone automatic pump and the "W" unit is a pump that has an alternating circuitry. They operate automatically in response to the change in water levels.

Automatic Model

Float Type
Automatic Operation

*Refer to page 17 for the operation of cylindrical float type.



Float Type
(PU, PN, PSF, TM)



Cylindrical Float Type
(OM)

Auto-alternation Model



(PU, PN, PSF)

How the Auto-alternation Model Works

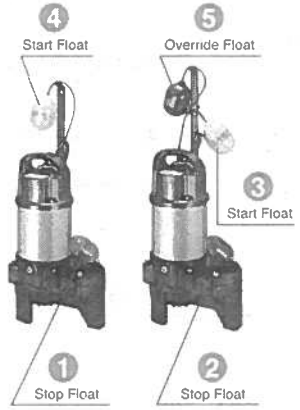

Automatic & Auto-alternation Operation

Primary Operation

1

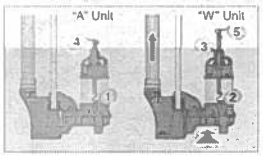

Water level rises and turns the Float #2 up. The Float #2 is activated but the pump does not start. When water level rises to Float #3 and the float is activated, the "W" unit starts.

Unusual Increase of Inflow

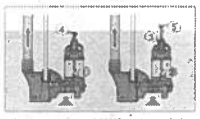

If inflow exceeds the capacity of "W" unit and the water level rises to Float #4, "A" unit starts.

2

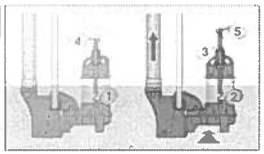

The "W" unit is discharging water (Water level falls).

3

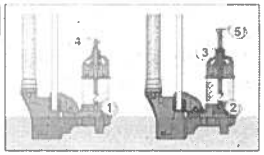

When water level falls to Float #2, the float is activated, and the "W" unit stops. The alternating circuitry deactivates the "W" unit for the next level rise.

Secondary Operation

1

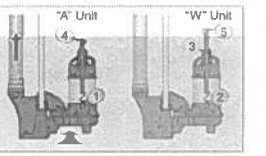

The next time the water level rises, Float #1 on the "A" unit is activated but the unit does not start until Float #4 is activated.

Unusual Increase of Inflow

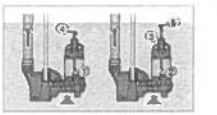

If inflow exceeds the capacity of "A" unit and the water level rises to Float #5, "W" unit starts.

2

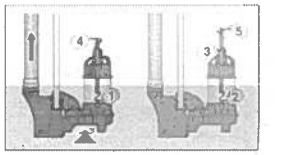

The "A" unit is discharging water (Water level falls).

3

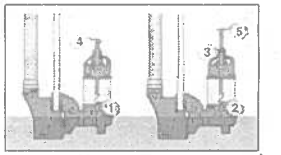

When water level falls and Float #1 is activated, the "A" unit stops. At the same time, "W" unit becomes ready for operation for the next level rise.

Badger Meter

M-Series® Mag Meter
M-2000 Detector

GENERAL

The Badger Meter M-Series® mag meter model M-2000 detector is the result of years of research and field use in electromagnetic flow meters. Based on Faraday's law of induction, these meters can measure almost any liquid, slurry or paste that has minimum electrical conductivity.

Designed, developed and manufactured under strict quality standards, the M-Series meter features sophisticated, processor-based signal conversion with accuracies of ±0.25 percent. The wide selection of liner and electrode materials helps ensure maximum compatibility and minimum maintenance over a long operating period.

OPERATION

The flow meter is a stainless steel tube lined with a nonconductive material. Outside the tube, two DC powered electromagnetic coils are positioned diametrically opposing each other. Perpendicular to these coils, two electrodes are inserted into the flow tube. Energized coils create a magnetic field across the whole diameter of the pipe.

As a conductive fluid flows through the magnetic field, a voltage is induced across the electrodes. This voltage is proportional to the average flow velocity of the fluid and is measured by the two electrodes. This induced voltage is then amplified and processed digitally by the converter to produce an accurate analog or digital signal. The signal can then be used to indicate flow rate and totalization or to communicate to remote sensors and controllers.

This technology provides many advantages. With no parts in the flow stream, there is no pressure loss. Also, accuracy is not affected by temperature, pressure, viscosity, density or flow profile. Finally, with no moving parts, there is practically no maintenance required.

APPLICATION

Because of its inherent advantages over other more conventional technologies, this meter can be used in the majority of industrial flow applications. Whether the fluid is water or highly corrosive, very viscous, contains a moderate amount of solids or requires special handling, this meter can accurately measure fluid flow. Today, magnetic meters are successfully used in industries including food and beverage, pharmaceutical, water and wastewater and chemical.

ELECTRODES

When looking from the end of the meter into the inside bore, the two measuring electrodes are positioned at three o'clock and nine o'clock. M-2000 mag meters have an "empty pipe detection" feature. This is accomplished with a third electrode positioned in the meter between twelve o'clock and one o'clock.



M-2000 Detector

If this electrode is not covered by fluid for a minimum five-second duration, the meter will display an "empty pipe detection" condition, send out an error message if desired, and stop measuring to maintain accuracy. When the electrode again becomes covered with fluid, the error message will disappear and the meter will continue measuring.

As an option to using grounding rings, a grounding electrode (fourth electrode) can be built into the meter during manufacturing to assure proper grounding. The position of this electrode is at five o'clock.

FEATURES

- ±0.25 percent accuracy independent of fluid viscosity, density and temperature
- Unaffected by most solids contained in fluids
- Pulsed DC magnetic field for zero point stability
- No pressure loss for low operational costs
- Corrosion resistant liners for long life
- Calibrated in state-of-the art facilities
- Integral and remote signal converter availability
- Optional grounding rings or grounding electrode
- Measurement largely independent of flow profile
- NSF listed

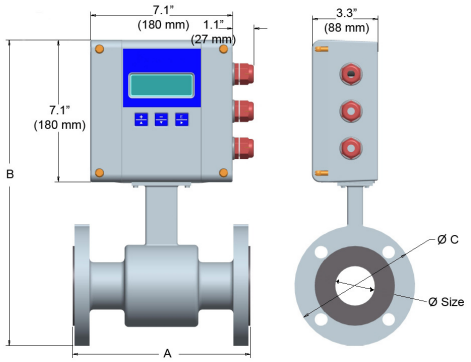

Meter with M-2000 amplifier

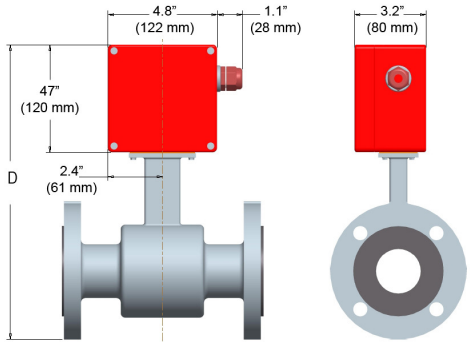

Meter with junction box for remote M-2000 amplifier

Size		A		B		C		D		Est. Weight with M-2000		Flow Range			
												LPM		GPM	
inch	mm	inch	mm	inch	mm	inch	mm	inch	mm	lbs	kg	min	max	min	max
1/4	6	6.7	170	14.0	356	3.5	89	11.4	288	10	4.5	0.063	20	0.02	5
5/16	8	6.7	170	14.0	356	3.5	89	11.4	288	10	4.5	0.114	34	0.03	9
3/8	10	6.7	170	14.0	356	3.5	89	11.4	288	10	4.5	0.177	53	0.05	14
1/2	15	6.7	170	14.0	356	3.5	89	11.4	288	10	4.5	0.416	125	0.11	33
3/4	20	6.7	170	14.2	361	3.9	99	11.5	293	13	5.5	0.75	225	0.2	59
1	25	8.9	225	14.4	366	4.3	108	11.7	298	18	8.0	1.20	350	0.3	93
1 1/4	32	8.9	225	15.2	386	4.6	117	12.5	318	20	9.0	2.00	575	0.5	152
1 1/2	40	8.9	225	15.4	390	5.0	127	12.7	322	21	9.5	3.00	900	0.8	239
2	50	8.9	225	15.9	403	6.0	152	13.2	335	26	11.5	4.70	1400	1	373
2 1/2	65	11.0	280	17.1	434	7.0	178	14.4	366	52	23.5	8	2400	2	631
3	80	11.0	280	17.3	440	7.5	191	14.7	372	54	24.5	12	3600	3	956
4	100	11.0	280	18.4	466	9.0	229	15.7	398	56	25.5	19	5600	5	1493
5	125	15.8	400	19.6	498	10.0	254	16.9	430	58	26.0	30	8800	8	2334
6	150	15.8	400	20.6	524	11.0	279	17.9	456	60	27.0	40	12700	11	3361
8	200	15.8	400	22.5	572	13.5	343	20.4	518	86	39.0	75	22600	20	5975
10	250	19.7	500	26.8	681	16.0	406	24.1	613	178	81.0	120	35300	30	9336
12	300	19.7	500	28.9	734	19.0	483	26.2	666	207	94.0	170	50800	45	13444
14	350	19.7	500	30.8	782	21.0	533	28.2	716	258	117	230	69200	60	18299
16	400	23.6	590	33.7	856	23.5	597	31.0	788	306	139	300	90400	80	23901
18	450	23.6	590	35.0	890	25.0	635	32.4	822	400	181	380	114000	100	30250
20	500	23.6	590	38.2	969	27.5	699	35.5	901	493	224	470	140000	125	37346
22	550	23.6	590	39.6	1005	29.5	749	36.9	937	523	237	570	170000	150	45188
24	600	23.6	590	42.2	1071	32.0	813	39.5	1003	552	251	680	200000	180	53778
28	700	23.6	590	46.2	1173	36.5	927	44.0	1118	648	294	920	275000	240	73100
30	750	31.5	800	48.3	1228	39.0	984	45.7	1161	702	319	1060	315000	280	84000
32	800	31.5	800	52.2	1325	41.4	1015	49.5	1257	768	349	1200	361000	320	95600
36	900	31.5	800	55.3	1405	46.0	1168	54.1	1374	848	385	1500	457000	400	121000
40	1000	31.5	800	60.0	1525	50.2	1230	57.4	1457	922	419	1900	565000	500	149300
42	1050	36.0	914	66.0	1675	53.0	1346	63.4	1610	1198	499	2100	620000	550	164600
48	1200	39.4	1000	69.9	1775	59.4	1455	67.2	1707	1208	549	2700	814000	720	215100
54	1400	39.4	1000	78.5	1995	68.4	1675	75.9	1927	1362	619	3700	1100000	980	292700

SPECIFICATIONS - Detector

Flow Range: 0.1 - 39.4 fps (0.03-12 m/s)
Sizes: 1/4 inch to 54 inches (6 mm to 1400 mm)
Min. Conductivity: ≥ 5 micromhos/cm
Accuracy:
± 0.25 percent of rate for velocities greater than 1.64 ft/s (0.50 m/s)
± 0.004 ft/s (± 0.001 m/s) for velocities less than 1.64 ft/s (0.50 m/s)
Electrode Materials: Standard: Alloy C
Optional: 316 stainless steel, gold/platinum plated, tantalum, platinum/rhodium
Liner Material: PFA up to 3/8 inch, PTFE 1/2 inch to 24 inches, Soft and Hard Rubber from 1 to 54 inches, Halar® from 14 to 40 inches
NSF Listed: Models with hard rubber liner 4-inch size and up; PTFE liner - All sizes.

Fluid Temperature:
With Remote Amplifier:
PFA, PTFE & Halar 311°F (155°C)
Rubber 178°F, (80°C)
With Meter Mounted Amplifier:
PFA, PTFE & Halar 212°F (100°C)
Rubber 178°F, (80°C)
Pressure Limits:
Maximum allowable non-shock pressure and temperature ratings for steel pipe flanges, according to American National Standard ANSI B16.5. (Example: 150-pound flanges, rated 285 PSI at ambient temperature.) (Example: 300-pound flange rated 740 PSI at ambient temperature.)
Coil Power: Pulsed DC
Ambient Temperature: -4°F to 140°F (-20°C to 60°C)

Pipe Spool Material: 316 stainless steel
Meter Housing Material: Carbon steel welded
Flanges: Carbon steel - Standard (ANSI B16.5 Class 150 RF)
316 stainless steel - Optional
Meter Enclosure Classification: NEMA 4X (IP66)
Optional: Submersible NEMA 6P (remote amplifier required)
Junction Box Enclosure Protection:
(for remote amplifier option) Powder coated die-cast aluminum, NEMA 4 (IP65)
Cable Entries: 1/2-inch NPT Cord Grip
Optional Stainless Steel Grounding Rings:

Meter Size	Thickness (of one ring)
up through 10 inches	.135 inch
12 to 20 inches	.187 inch

M-Series is a registered trademark of Badger Meter, Inc.
Other trademarks appearing in this document are the property of their respective entities.
©2011 Badger Meter, Inc. All rights reserved.

Due to continuous research, product improvements and enhancements, Badger Meter reserves the right to change product or system specifications without notice, except to the extent an outstanding contractual obligation exists.

Badger Meter | P.O. Box 245036, Milwaukee, Wisconsin 53224-9536
800-876-3837 | infocentral@badgermeter.com | www.badgermeter.com

Badger Meter

M-Series® Mag Meter

Model M-2000



IMPORTANT:
This manual contains important information.
READ AND KEEP FOR REFERENCE.

IOM-175-03 (4-11)
PN: 53400-190 Rev 3

Installation & Operation Manual

CONTENTS

Safety Precautions and Instructions 5

System Description 5

Unpacking and Inspection 6

Rigging, Lifting and Moving Large Units 6

Meter Location, Orientation and Applications 8

Remote Amplifier Outdoor Location 8

Pipelines and Fluid Flow 8

Meter Orientation 8

Vertical Placement 9

Horizontal Placement 9

Straight Pipe Requirements 10

Pipe Reducer Requirements 10

Chemical Injection Applications 11

Partially-Filled Pipe Situations 11

Meter Gaskets and Grounding 13

Meter/Pipeline Connection Gaskets 13

Meter Grounding 13

Conductive Pipe Grounding 13

Non-Conductive Pipe Grounding 14

Amplifier Mounting Configuration Options 14

Meter Mount Configuration 14

Remote Mount Configuration 14

Submersible Option 14

Wiring 15

Wiring Safety 15

Opening the M-2000 Cover 15

Power Connections 16

External Disconnect 16
AC Power Wiring 16
Remote Mount Installation 16
Mount Bracket to Amplifier 16
Wiring Configuration 16
Wiring for Remote Configuration 17
Empty Pipe Detection Considerations 17
Configuring Input/Output (I/O) 18
Analog Output Wiring Diagram 19
Digital Output Wiring Diagrams 20
Digital Input Wiring Diagram 20
Programming the M-2000 21
Displays 21
Menu Selection Display 21
Numeric Entry Display 21
Function Buttons 22
Security 24
Setting the Administration PIN 24
Setting the Service PIN 24
Setting the User PIN 24
Entering Your Personal Identification Number (PIN) 25
Setting Up the M-2000 with Quick Setup 26
Using the M-2000's Main Menu Programming Options 28
Maintenance 50
Cleaning the Flow Tube and Electrode 50
Replacing the Fuse 50
Troubleshooting 51
Appendix: Detector Specifications 53
Appendix: Amplifier Specifications 54

Safety Precautions and Instructions

Some procedures in this manual require special safety considerations. In such cases, the text is emphasized with the following symbols:

Symbol	Explanation
⚠WARNING	Warning indicates the potential for severe personal injury, death or substantial property damage. Comply with the instructions and proceed with care.
⚠CAUTION	Caution indicates the potential for minor personal injury or property damage. Comply with the instructions and proceed with care.

System Description

The Badger Meter M-Series® model M-2000 electromagnetic flow meter is intended for fluid metering in most industries including water, wastewater, food and beverage, pharmaceutical and chemical.

The basic components of an electromagnetic flow meter are:

- The **detector**, which includes the flow tube, isolating liner and measuring electrodes.
- The **amplifier**, which is the electronic device responsible for the signal processing, flow calculation, display and output signals.

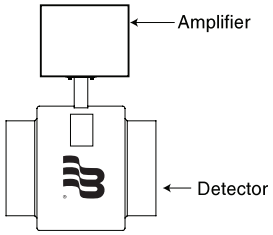

The construction materials of the wetted parts (liner and electrodes) should be appropriate for the specifications on the intended type of service. We recommend that you review all of the compatibilities consistent with the specifications.

Each meter is factory tested and calibrated. A calibration certificate is included with each meter.

Unpacking and Inspection

Follow these guidelines when unpacking the M-Series equipment.

- If a shipping container shows any sign of damage, have the shipper present when you unpack the meter.
- Follow all unpacking, lifting and moving instructions associated with the shipping container.
- Open the container and remove all packing materials. Store the shipping container and packing materials in the event the unit needs to be shipped for service.
- Verify that the shipment matches the packing list and your order form.
- Inspect the meter for any signs of shipping damage, scratches, or loose or broken parts.

Note: If the unit was damaged in transit, it is your responsibility to request an inspection report from the carrier within 48 hours. You must then file a claim with the carrier and contact Badger Meter for appropriate repairs or replacement.

- All detectors with polytetrafluoroethylene (PTFE) liners are shipped with a liner protector on each end to maintain proper form of the PTFE material during shipping and storage.

Note: Do not remove the liner protectors until you are ready to install.

- Storage: If the meter is to be stored, place it in its original container in a dry, sheltered location. Storage temperature ranges are: -40°F to 160°F (-40°C to 70°C).

Rigging, Lifting and Moving Large Units

⚠CAUTION

When rigging, lifting or moving large units, follow these guidelines:

- DO NOT lift or move a meter by its amplifier, junction box or cables.
- Use a crane rigged with soft straps to lift and move meters with flow tubes that are between two inches and eight inches (50 mm and 200 mm). Place the straps around the detector body, between the flanges, on each side of the detector.
- Use the lifting lugs when lifting meter flow tubes that are 10 inches (250 mm) in diameter or larger.

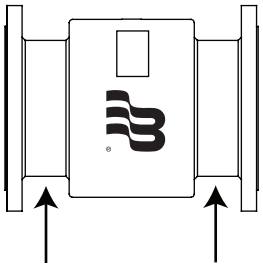

Place straps between flanges.

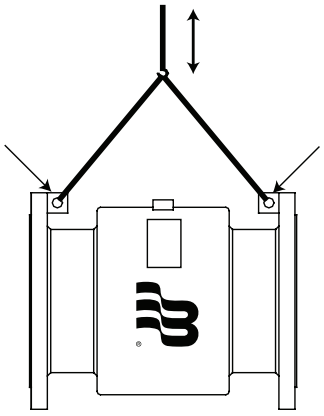

Use lifting lugs with 10-inch or larger meters.

- Use the sling-rigged method to lift large detectors into a vertical position while they are still crated. Use this method to position while they are still crated. Use this method to position large detectors vertically into pipelines.

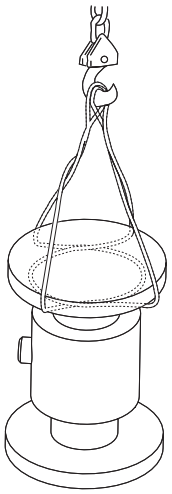

- Do not lift a detector with a forklift by positioning the detector body on the forks, with the flanges extending beyond the lift. This could dent the housing or damage the internal coil assemblies.
- Never place forklift forks, rigging chains, straps, slings, hooks or other lifting devices inside or through the detector's flow tube to hoist the unit. This could damage the isolating liner.

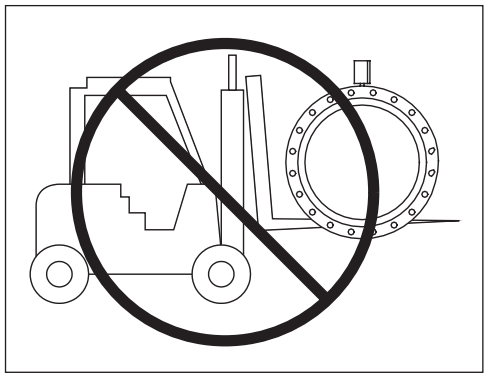

Do not lift detector with forklift.

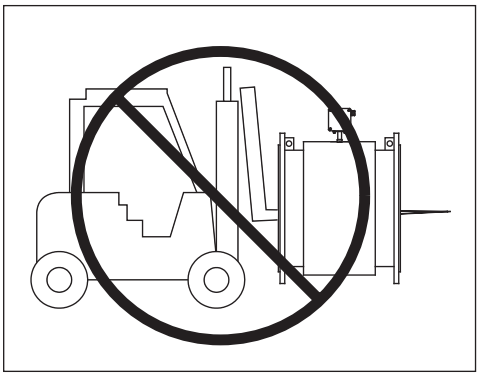

Do not lift or rig lifting devices through detector.

Meter Location, Orientation and Applications

The M-2000 provides two amplifier mounting options: an integral or meter mount option and a junction box/remote option.

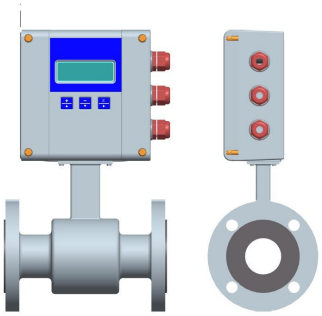

Meter mount amplifier

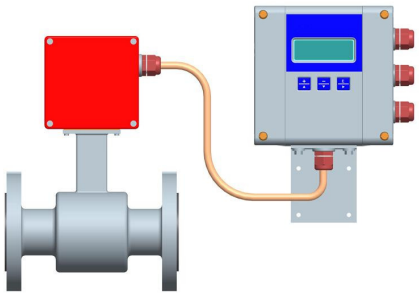

Junction box with remote amplifier

Remote Amplifier Outdoor Location

The amplifier can be installed and operated outdoors. However, it must be protected from the elements, as follows:

- The ambient environment/temperature rating for the unit is -4° F to 140° F (-20° C to 60° C).
- If an indoor location is within 500 feet (152 meters) of the detector, consider increasing the cable length and mounting the amplifier indoors.
- At minimum, fabricate a roof or shield over and/or around the amplifier to protect the LCD display screen from direct sunlight.

Pipelines and Fluid Flow

Take the following precautions during installation:

- Do not install the meter on pipes with extreme pipe vibrations. If pipes are vibrating, secure the piping with appropriate pipe supports in front of and behind the meter. If vibrations can't be restrained, mount the amplifier in a remote location.
- Do not install the detector close to pipeline valves, fittings or impediments that can cause flow disturbances.
- For detectors with PTFE liners, do not install the detector on suction sides of pumps.
- Do not install the detector on outlet sides of piston or diaphragm pumps. Pulsating flow can affect meter performance.
- Avoid installing the detector near equipment that produces electrical interference such as electric motors, transformers, variable frequency, power cables, *etc.*
- Verify that both ends of the signal cables are securely fastened.
- Place power cables and signal cables in separate conduits.
- Place the meter where there is enough access for installation and maintenance tasks.

Meter Orientation

Mag meters can operate accurately in any pipeline orientation and can measure volumetric flow in forward and reverse directions.

Note: A "Forward Flow" direction arrow is printed on the detector label.

Vertical Placement

Mag meters perform best when placed vertically, with liquid flowing upward and meter electrodes in a closed, full pipe.

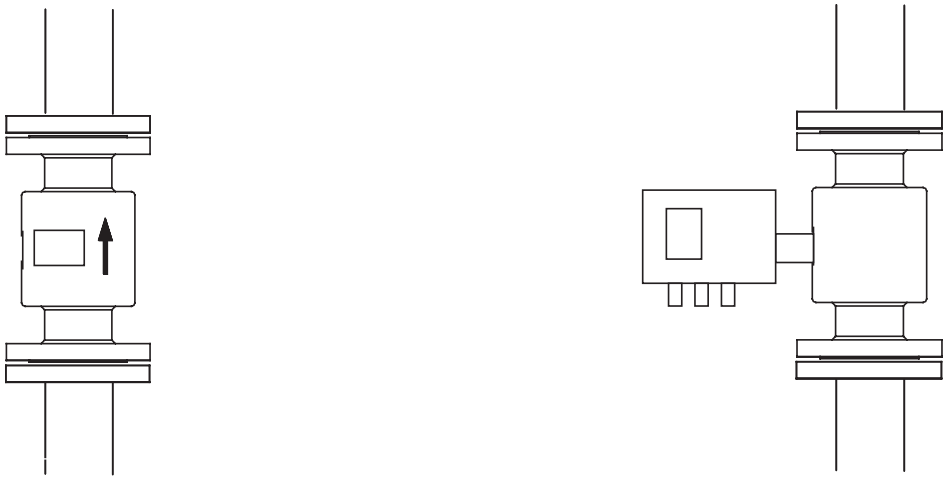

Vertical placement allows the pipe to remain completely full, even in low flow, low pressure applications, and it prevents solids build-up, sediment deposit and accumulation on the liner and electrodes.

Note: Carefully observe the "Forward Flow" label on the meter body and install the meter accordingly. When installed vertically, rotate amplifier so that cable glands are facing down.

Horizontal Placement

M-2000 meters are equipped with an "Empty Pipe Detection" feature. If an electrode mounted in the pipe is not covered by fluid for five seconds, the meter will display an "Empty Pipe Detection" condition. The meter will send out an error message and stop measuring flow. When the electrode is again covered with fluid, the error message disappears and the meter will begin measuring.

When installing the meter on a horizontal pipe, mount the detector to the pipe with the flow-measuring electrode axis in a horizontal plane (three and nine o'clock). This placement helps prevent solids build-up, sediment deposit and accumulation on the electrodes.

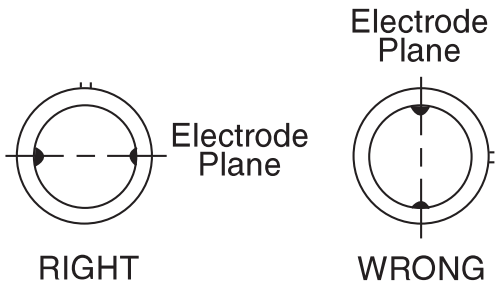

Straight Pipe Requirements

Sufficient straight-pipe runs are required at the detector inlet and outlet for optimum meter accuracy and performance. An equivalent of three diameters of straight pipe is required on the inlet (upstream) side. Two diameters are required on the outlet (downstream) side.

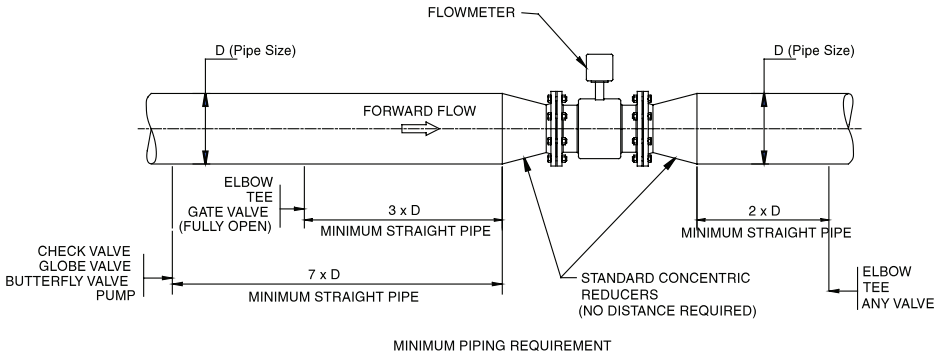

Pipe Reducer Requirements

With pipe reducers, a smaller meter can be mounted in larger pipelines. This arrangement may increase low-flow accuracy.

There are no special requirements for standard, concentric, pipe reducers.

Custom fabricated pipe reducers must have an approximate slope angle of 15 degrees to minimize flow disturbances and excessive loss of head. If this is not possible, install the custom pipe reducers as if they were fittings and install the required amount of straight pipe.

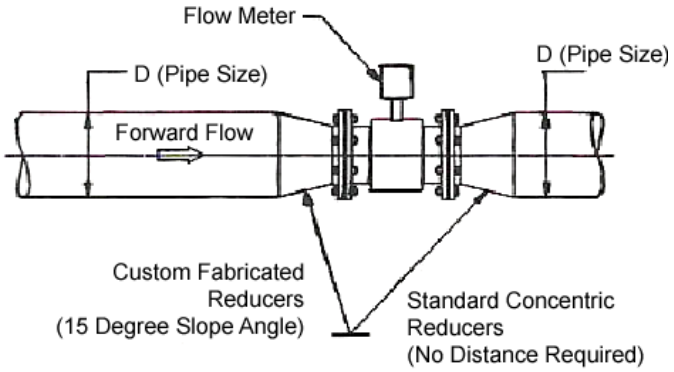

Chemical Injection Applications

For water line applications with a chemical injection point, install the meter upstream of the injection point. This eliminates any meter performance issues.

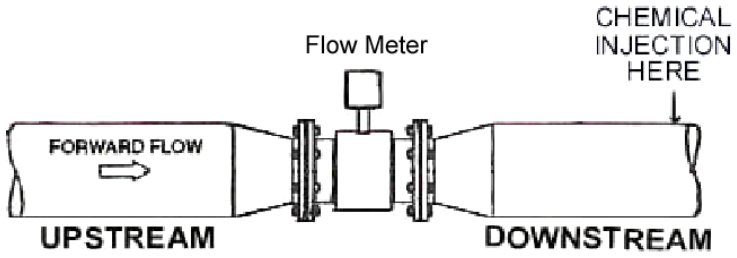

If a meter must be installed downstream of a chemical injection connection, the distance between the meter and the injection point should be between 50 and 100 feet (15 and 30 meters). The distance must be long enough to allow the water/chemical solution to reach the meter in a complete, homogeneous mixture. If the injection point is too close, the meter senses the two different conductivities for each liquid. This will likely result in inaccurate measurements. The injection method – spaced bursts, continuous stream of drips or liquid or gas – can also affect downstream readings by the meter.

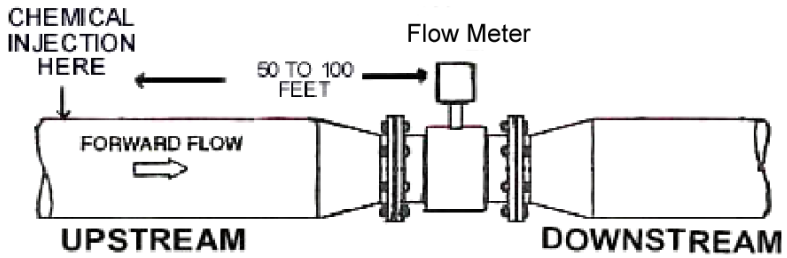

Sometimes, due to circumstances, it's difficult to specify the exact downstream placement distances. Contact Badger Meter Technical Support to review your application if necessary.

Partially-Filled Pipe Situations

In some locations, the process pipe may be momentarily only partially filled. Examples include: lack of back pressure, insufficient line pressure, gravity flow applications, *etc.*

To eliminate these situations, do not install the meter at the highest point of the pipeline.

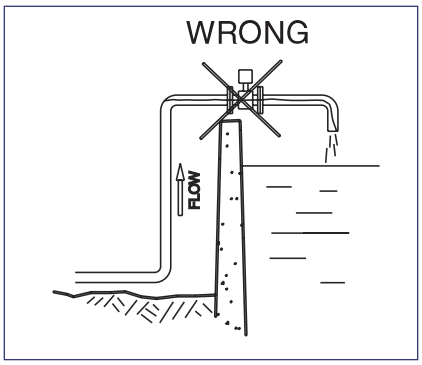

Do not install the meter in a vertical, downward flow section of pipe.

Always position the ON/OFF valves on the downstream side of the meter.

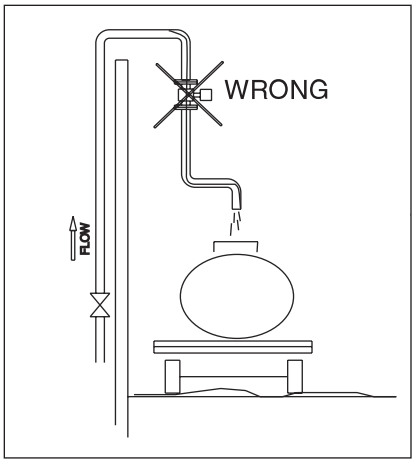

Do not install in a vertical, downward position.

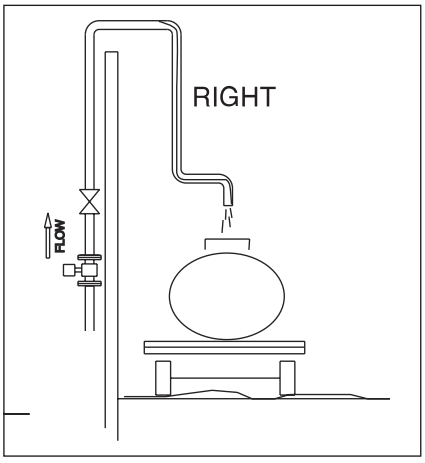

Position "On/Off" valves on downstream side.

To minimize the possibility of partially-full pipe flows in horizontal, gravity or low pressure applications, create a pipe arrangement that ensures the detector remains full of liquid at all times.

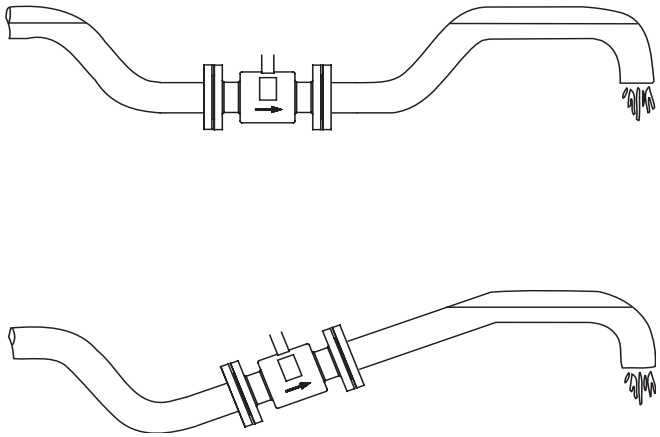

Meter Gaskets and Grounding

Gasket and grounding requirements must be considered when determining the meter location, orientation and application.

Meter/Pipeline Connection Gaskets

You must install gaskets (not provided) between the detector's isolating liner and the pipeline flange to ensure a proper and secure hydraulic seal. Use gaskets that are compatible with the fluid. Center each gasket on the flange to avoid flow restrictions or turbulence in the line.

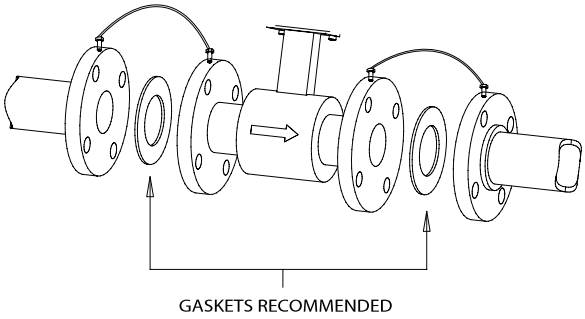

During installation, do not use graphite or any electrically conductive sealing compound to hold the gaskets. This could compromise the accuracy of the measuring signal.

If you are using a grounding ring in the detector/pipeline connection, place the ring between two gaskets. (See *Non-Conductive Pipe Grounding* section, page 14.)

Meter Grounding

Process pipeline material can be either electrically conductive (metal) or not electrically conductive (made of or lined with PVC, fiberglass or concrete).

IMPORTANT

It is essential that the mag meter amplifier's input ground (zero voltage reference) be electrically connected to the liquid media and to a good, solid earth ground reference.

Conductive Pipe Grounding

To achieve an adequate ground, the meter body MUST be electrically connected to the liquid media. The mag meter flanges are provided with grounding bolts for this purpose.

If the pipe material is electrically conductive, simply install grounding straps between these grounding bolts and the mating flanges.

To ensure a good electrical connection at the mating flanges, we recommend that you drill and tap the flanges and install a grounding screw (not provided).

These grounding straps must be copper wire, at least 12AWG size. They must be connected on both sides (inlet and outlet) of the detector and to a local, earth ground.

Non-Conductive Pipe Grounding

IMPORTANT

If the process pipe is not electrically conductive (PVC, fiberglass, cement-lined pipes or any other non-conductive material) and the meter was not originally ordered with an optional grounding electrode, you must install a pair of grounding rings between the mating flanges at both ends of the meter. See the following illustration.

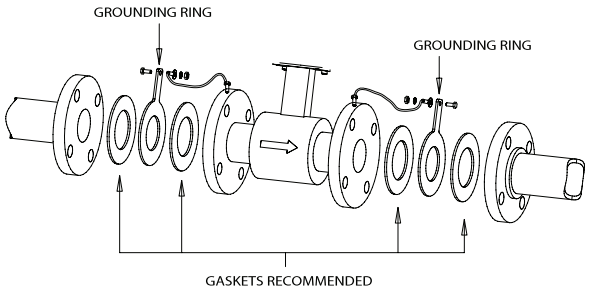

In this case, the grounding straps should be connected to both of the grounding rings and to a good, solid earth ground. Grounding rings are available in stainless steel. If your fluid is too aggressive for stainless steel, order a meter with the optional grounding electrode in a material compatible with the fluid.

Amplifier Mounting Configuration Options

There are two configuration options for mounting the amplifier. There are many options to accommodate a variety of meter-placement and environmental conditions.

Meter Mount Configuration

The meter mount configuration has the amplifier mounted directly on the detector. This compact, self-contained configuration minimizes installation wiring.

Remote Mount Configuration

The remote mount configuration places the amplifier at a location away from the fluid flow and detector. This is necessary in situations where process fluid temperature or the environment exceeds amplifier ratings.

The detector and amplifier are connected by wires, run through conduit, between junction boxes on the detector and the amplifier. The distance between the detector junction box and amplifier junction box can be up to 500 feet (152 meters). A remote mounting bracket is supplied.

Submersible Option

If you are installing the meter in a vault, you should order the remote amplifier option. You must not install the amplifier inside a vault. We also recommend ordering the remote meter package with the submersible option (NEMA 6P). This will eliminate any potential problems resulting from humidity or temporary flooding in the vault.

Note: The National Electronics Manufacturer's Association (NEMA) 6P enclosures are constructed for indoor or outdoor use to provide protection against access to hazardous parts; to provide a degree of protection against ingress of solid foreign objects and water (hose directed water and the entry of water during prolonged submersion at a limited depth); that provide an additional level of protection against corrosion and that will be undamaged by the external formation of ice on the enclosure.

Wiring

Wiring Safety

⚠WARNING At installation, be sure to comply with the following requirements:

- Disconnect power to the unit before attempting any connection or service to the unit.
- Do not bundle or route signal lines with power lines.
- Keep all lines as short as possible.
- Use twisted pair shielded wire for all output wiring.
- Observe all applicable, local electrical codes.

Opening the M-2000 Cover

The M-2000 amplifier's design lets you open the cover without completely removing it.

⚠WARNING Cover is attached with display ribbon cable.

To open the cover you will need a blade screwdriver.

Follow these steps:

1. Disconnect power to the unit.
2. Completely remove the two screws from either the left or the right side of the amplifier.
3. Loosen each of the remaining screws so that the round head of the screw clears the top edge of the cover.



4. Lift and pivot the cover into the open position.

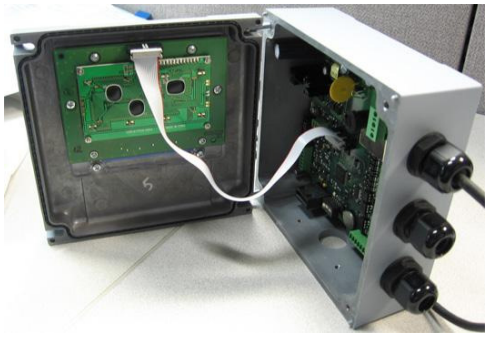

Power Connections

External Disconnect

⚠CAUTION Install an external disconnect switch or circuit breaker that meets local standards.

Position the M-2000 in an accessible location.

Position and identify the disconnect device so as to provide safe and easy operation.

Label the disconnect device as being for the mag meter.

AC Power Wiring

For the AC power connections, use three wire-sheathed cable with an overall cable diameter of 0.2 inch to 0.45 inch (5 mm to 12 mm). For signal output, use 18 to 22 gauge (0.25 mm^2 to 0.75mm^2) shielded wire. Overall cable diameter between 0.12 inch and 0.35 inch (3 mm to 9 mm).

⚠CAUTION To prevent accidents, connect main power only after all other wiring has been completed.

The amplifier is a microprocessor device. It is important that the power supply be as "clean" as possible. Avoid using power lines that feed heavy loads: pumps, motors, *etc.* If dedicated lines are not available, a filtering or isolation system may be required.

Power wiring is the same for meter mount and remote mount amplifiers.

Remote Mount Installation

If you are installing the M-2000 amplifier in a remote location, review the procedures in this section.

Mount Bracket to Amplifier

1. Align bracket-mounting holes with amplifier mounting holes.
2. Attach bracket to amplifier with supplied screws. Torque screws to 80 inch pounds.

Wiring Configuration

Wiring between the detector and the M-2000 amplifier comes complete from the factory. If your installation requires the use of conduit, we recommend that you follow these steps when wiring the detector to the amplifier.

1. Remove the junction box lid. Carefully remove the wires connected to the terminal blocks that run to the M-2000 amplifier. See the chart below for a reference of wire color to terminal connection.
2. Run cable through the conduit from the amplifier location while retaining the wiring of the cable to the amplifier, as supplied.
3. Complete conduit assembly on both ends and rewire the cable into the junction box as it was previously wired.

Wiring for Remote Configuration

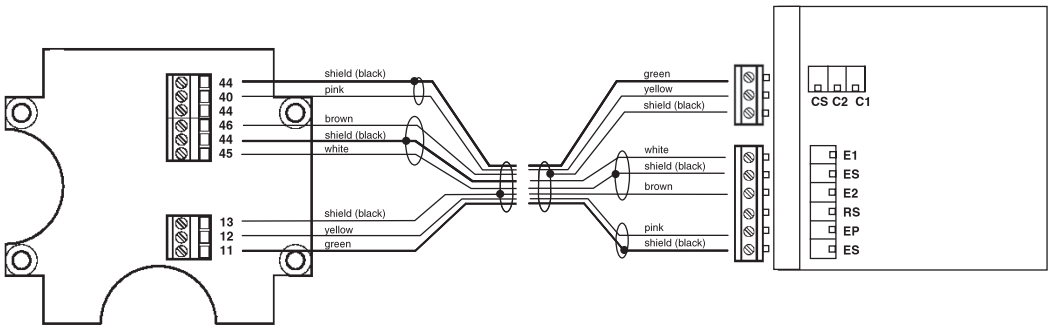

Remote style M-2000 amplifier models can be ordered with standard cables measuring 15, 30, 50 and 100 feet. In addition, cables up to 500 feet are available.

Junction Box			Amplifier
Connection No.	**Description**	**Wire Color**	**Connection**
11	Coil	Green	C1
12	Coil	Yellow	C2
13	Main Shield	Black (Red Ferrul)	CS
45	Electrode	White	E1
44*	Electrode Shield	Black	ES
46	Electrode	Brown	E2
40	Empty Pipe	Pink	EP
44*	Empty Pipe Shield	Black	ES

*Connections with the No. 44 are lying on the same potential.

Empty Pipe Detection Considerations

Take into account the following cable length and conductivity requirments, if you will be using empty pipe detection.

Cable Length (Feet)	Minimum Conductivity Required (µS/cm)
0*	5
100	20
500	100

*** Meter Mount**

Configuring Input/Output (I/O)

This section describes wiring the following M-2000 inputs/outputs:

- Analog output
- Digital input
- Digital outputs
- Communication

Once the sensor and the amplifier have been wired, wire any inputs and outputs to the M-2000 amplifier.

Do not connect the main power connection until you have made all other wiring connections. Follow all of the safety precautions and local code to prevent electrical shock and damage to the electronic components.

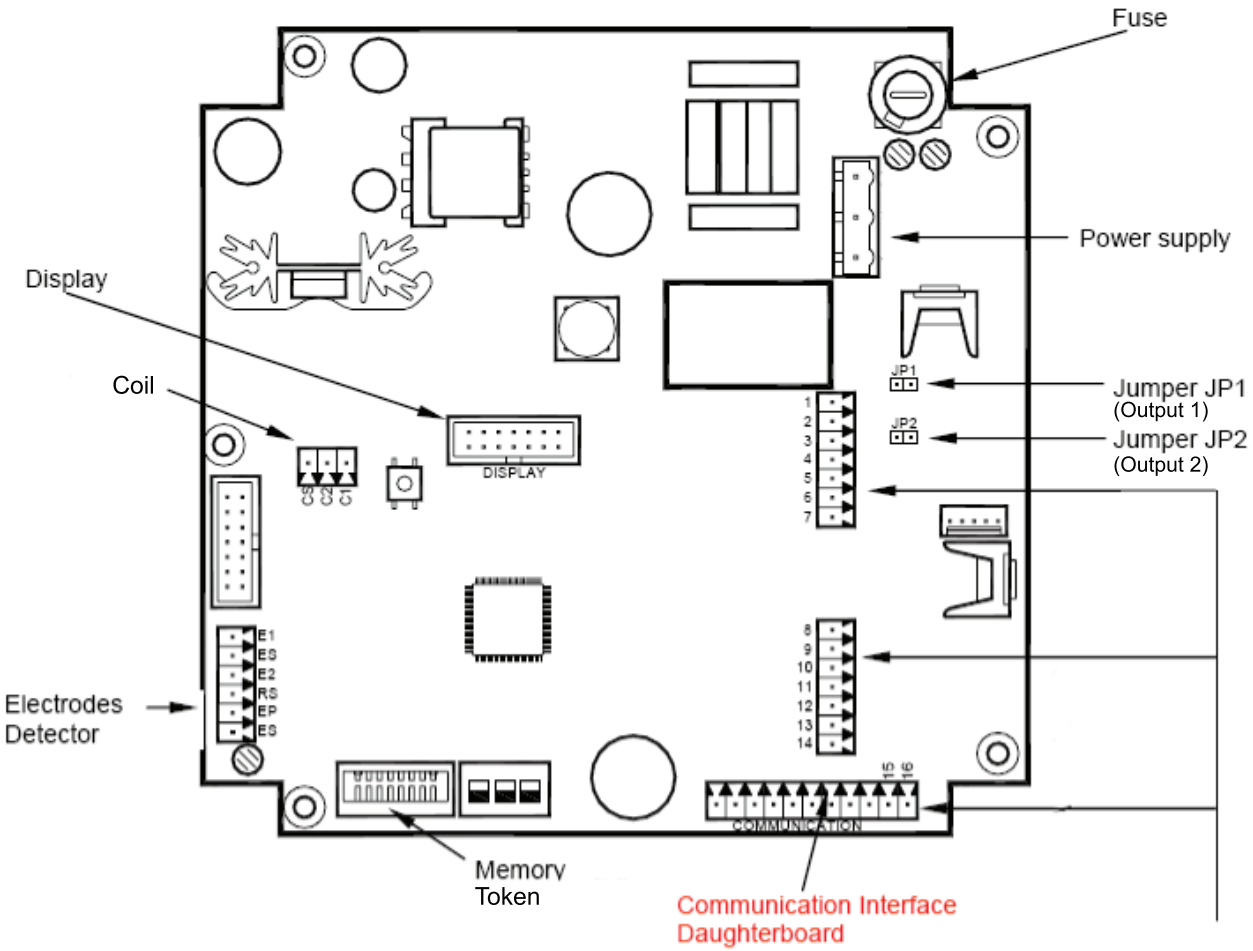

Input/Output	Description	Terminal
Analog Output	0-20 mA Resistive Load < 800 ohms 4-20 mA Resistive Load < 800 ohms 0-10 mA Resistive Load < 800 ohms 2-20 mA Resistive Load < 800 ohms	16 (+) 15 (-)
Digital Output 1	Passive max. 30 VDC, 100 mA Active 24 VDC, 50 mA (set Jumper JP1) Max. Frequency 10 kHz	1 (+) and 2 (-)
Digital Output 2	Passive max. 30 VDC, 100 mA Active 24 VDC, 50 mA (set Jumper JP2) Max. Frequency 10 kHz	3 (+) and 4 (-)
Digital Output 3	Passive Max 30 VDC, 100 mA, 10 kHz Solid State Relay 48 VAC, 500 mA, 1 kHz * Software configurable	10 (+) and 9 (-) 10 (+) and 11 (-)
Digital Output 4	Passive Max 30 VDC, 100 mA, 10 kHz Solid State Relay 48 VAC, 500 mA, 1 kHz * Software configurable	13 (+) and 12 (-) 13 (+) and 14 (-)
Digital Input	5 - 30 VDC	8 (+) and 9 (-)
Communications (Port A)	RS232, configurable, Modbus RTU or RDI.	7 GND 6 Rx 5 Tx

Analog Output Wiring Diagram

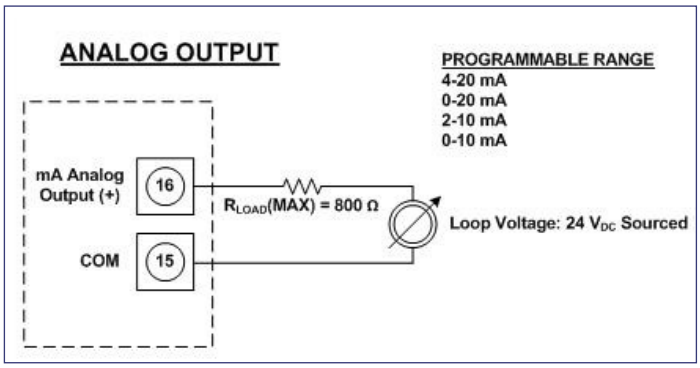

Digital Output Wiring Diagrams

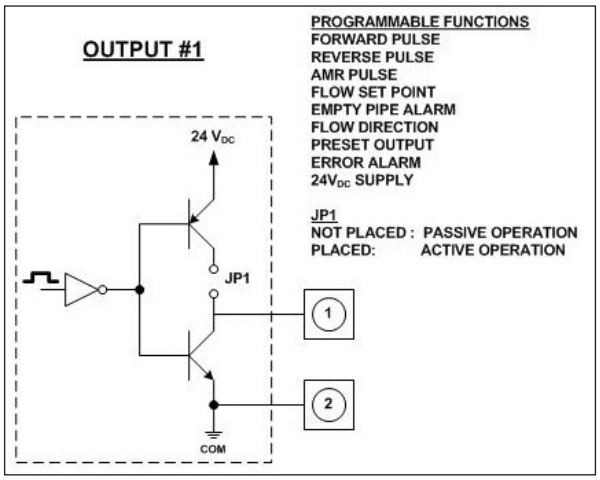

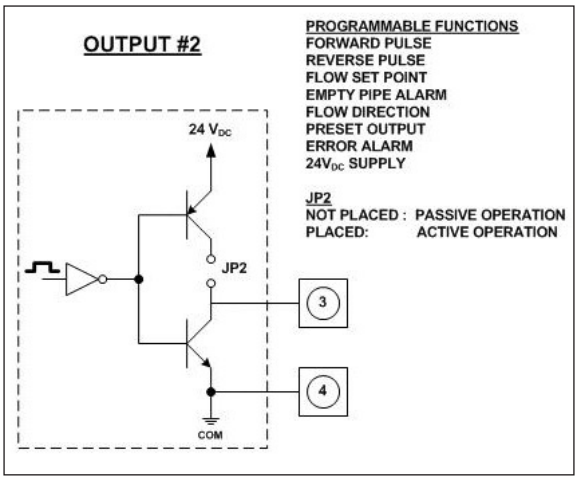

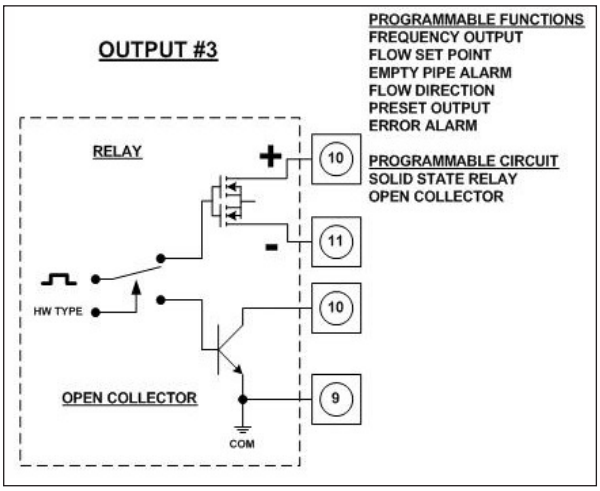

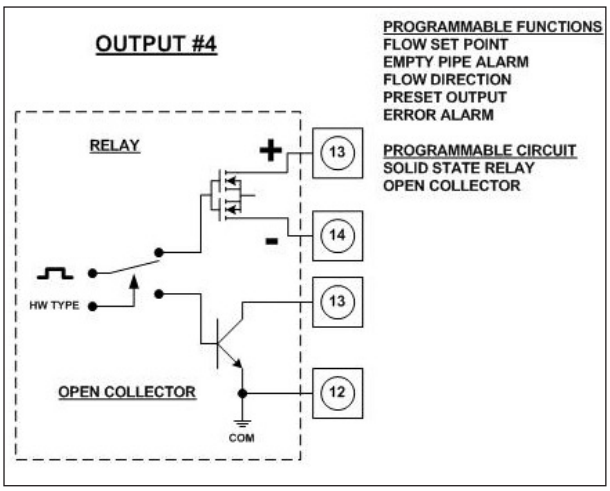

Digital Input Wiring Diagram

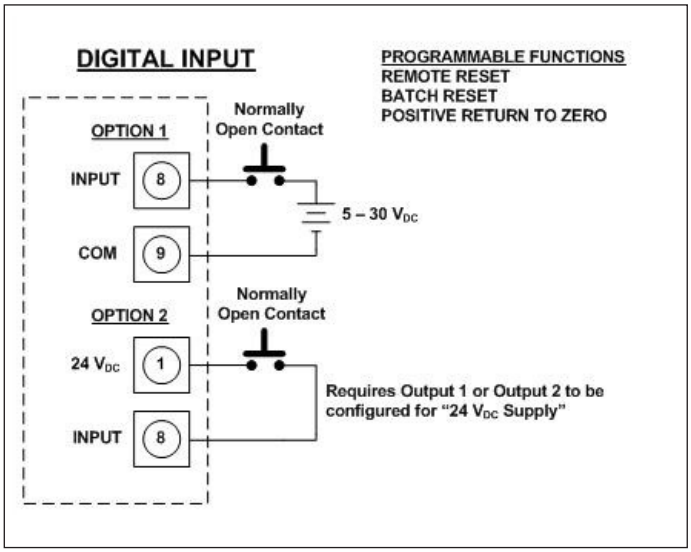

Programming the M-2000

The M-2000 amplifier comes preprogrammed from the factory. Typically, you will not need to do any additional programming. However, to take advantage of special features, you can program the meter for your specific needs. If you will be programming the meter, familiarize yourself with the M-2000 Function Buttons and follow the procedures outlined below.

Displays

There are two types of displays on the M-2000:

- Menu Selection
- Numeric Entry

Menu Selection Display

Menu selection displays will appear in the following format:

```
DISPLAY TITLE
>Menu Selection 1
 Menu Selection 2
DIRECTIONS LINE
```

Display format

```
START MENU
>Exit this Menu
 Main Menu
MORE: ↑,↓     ENTER:>
```

Example menu

The top line shows the title of of the display screen. Below that are two visible menu selections. The bottom line provides directions for user input.

Typically, a menu contains more options than will fit in the two, menu selection lines. Press the [↑] and [↓] buttons to scroll the display text up and down one line at a time.When the arrow is pointed to your desired menu option, press [E] to select the item and open its display.

Numeric Entry Display

Numeric entry displays will appear in the following format:

```
DISPLAY TITLE
   Description Line
    Numeric Value
DIRECTIONS LINE
```

Display format

```
LOW FLOW CUTOFF
 % of    300.000 GPM
       2.00%
CHG: +,-      NEXT:E
```

Example numeric entry display

The top line shows the title of of the display screen. The second line is a description of the value. The third line shows the current value. The bottom line provides directions for user input.

Note: The bottom line of a numeric-value display provides prompts regarding the function of each button. The [+] or [-] button will change the value of the numeral. The [E] button will move the cursor one digit to the right. When the cursor is at the final, right-most digit, pressing [E] will reposition the cursor at the left-most digit. The bottom line display will change to reflect the new function of the [E] button. Press [E] to save the current entry. Press [+] to edit the current entry.

```
LOW FLOW CUTOFF
 % of    300.000 GPM
       3.00%
EDIT:+         SAVE:E
```

Details on how to change and set numeric values are described in the following section, **Function Buttons.**

Function Buttons

All M-2000 programming is accomplished using the three function buttons located on the front of the amplifier:



Note: Throughout this manual, the buttons will be referred to as: [↑] or [+] and [↓] or [-], depending on the context. The "Enter" button will be referred to as [E].



Consider the [+ | ↑] button as the "next step" or "scroll text up" button. During programming, pressing this button will go to the next menu selection, or increment a numeral.

Example 1: The illustration below shows the M-2000 Main Menu. The selection arrow is pointing to the Exit this Menu selection.

To scroll up to the menu's next selection, press [↑] once. The menu text scrolls up to the next menu selection, Main Menu.

```
START MENU
>Exit this Menu
 Main Menu
MORE: ↑,↓      ENTER:>
```

Press [↑]

```
START MENU
> Main Menu
  Quick Setup
MORE: ↑,↓      ENTER:>
```

Example 2: Some procedures require you to enter a numeric value. The [+] button is used to increment the selected numeral. The illustration below, shows the Low Flow Cutoff parameter display. Notice the cursor under the 2 in the ones' place. In this case, press [+] once to increment the numeral to the value of 3.00%.

```
LOW FLOW CUTOFF
 % of    300.000 GPM
       2.00%
CHG: +,-       NEXT:E
```

Press [+]

```
LOW FLOW CUTOFF
 % of    300.000 GPM
       3.00%
CHG: +,-       NEXT:E
```



Consider the Down Arrow [- | ↓] button as the "previous step" button. During a procedure, pressing this button will go to the menu's previous selection or decrement a numeral.

Example 1: The illustration below shows the M-2000 Main Menu. The selection arrow is pointing to the Meter Setup selection. To scroll the text down to the menu's previous selection, Exit this Menu (which is not visible on the display), press [↓] once.

```
MAIN MENU
>Meter Setup
 Measurements
MORE: ↑,↓      ENTER:>
```

Press [↓]

```
MAIN MENU
>Exit this Menu
 Meter Setup
MORE: ↑,↓      ENTER:>
```

Example 2: For procedures that require you to enter a numeric value, the [–] button is used to decrement the selected numeral. The illustration below shows the Low Flow Cutoff parameter display. Notice the cursor under the 3 in the ones' place. In this case, press the [–] once to decrement the numeral to the value of 2.00 %.

```
LOW FLOW CUTOFF
 % of    300.000 GPM
       3.00%
CHG: +,-       NEXT:E
```

Press [-]

```
LOW FLOW CUTOFF
 % of    300.000 GPM
       2.00%
CHG: +,-       NEXT:E
```



The [E] button functions as an "Enter" button, or "cursor right" button.

Example 1: The illustration below shows the M-2000 Main Menu. The selection arrow is pointing to the Meter Setup selection. Press [E] to select Meter Setup, and open the Meter Setup display.

```
MAIN MENU
>Meter Setup
 Measurements
MORE: ↑,↓      ENTER:>
```

Press [E]

```
METER SETUP
>Exit this Menu
 Scale Factor
MORE:↑,↓       ENTER:>
```

In cases where you are entering a numeric value, the [E] button does not function as the "Enter" button, but rather, will move the cursor to the right. When the cursor is at the right-most position, the [E] will now serve as the Enter key.

Example 2: The illustration below shows the Low Flow Cutoff display. The cursor is under the 3 in the ones' place. In this case, press [E] to move the cursor to the right one digit.

```
LOW FLOW CUTOFF
 % of    300.000 GPM
       3.00%
CHG: +,-       NEXT:E
```

Press [E]

```
LOW FLOW CUTOFF
 % of    300.000 GPM
       3.00%
CHG: +,-       NEXT:E
```

Security

The M-2000 security feature gives you the option to restrict access to the meter by way of a five-digit Personal Identification Number (PIN). The system administrator can set up a single PIN for each of the three different levels of access:

- **Administration** - allows access to all M-2000 menu configuration screens.
- **Service** - allows access to service-level and user-level menu configuration screens.
- **User** - allows access only to user-level menu configuration screens.

Not all levels of access need to be set. If no PINs are set up, any M-2000 user will have access to all functions.

> **Note: The security settings will also apply to remote access. All remote writes to the meter will be blocked unless the user is remotely logged in.**

Setting the Administration PIN

Users logged in with the Administration PIN have access to all M-2000 menu configuration screens.

To set the administrator's PIN, follow these steps from the **Advanced Menu**:

1. Select **Security** to view the Security menu.
2. Select **Set Admin PIN** to view the Admin PIN display.
3. Set the five-digit PIN number to the desired value.
4. Press **[E]** to save the PIN and to return to the Security menu.

Setting the Service PIN

Users logged in with the Service PIN have access to service level menu configuration screens. Service users will not have access to administrative screens.

> **Note: In order to set a service-level PIN, you must first set up an administration PIN.**

To set the service PIN, follow these steps from the **Advanced Menu**:

1. Select **Security** to view the Security menu.
2. Select **Set Service PIN** to view the Service PIN display.
3. Set the five-digit PIN number to the desired value.
4. Press **[E]** to save the PIN and to return to the Security menu.

Setting the User PIN

Users logged in with this User PIN have access to user-level procedures. Users will not have access to administrative or service screens.

> **Note: In order to set a user-level PIN, you must first set up an administration PIN and a service PIN.**

To set the user's PIN, follow these steps from the **Advanced Menu**:

1. Select **Security** to view the Security menu.
2. Select **Set User PIN** to view the User PIN display.
3. Set the five-digit PIN number to the desired value.
4. Press **[E]** to save the PIN and to return to the Security menu.

Entering Your Personal Identification Number (PIN)

If your system has been set up with PIN security, you will need to enter a PIN to access programming functions. There are three possible access levels, each with its own unique PIN: User, Service and Administration. Your system administrator will provide you with the appropriate PIN.

Note: All PINs are factory set to 00000. At this setting, you will not be required to enter a PIN. If the system administrator has not set the PIN, pressing [E] from the Start Screen opens the Main Menu.

If you forget or misplace your PIN, call Badger Meter Customer Service to get a master password. When you call, have the security code that appears in the upper right corner of the PIN Request display.

Follow these steps to enter your PIN in the M-2000:

1. At the **Main Menu**, press **[E]**. The **PIN Request** display opens.

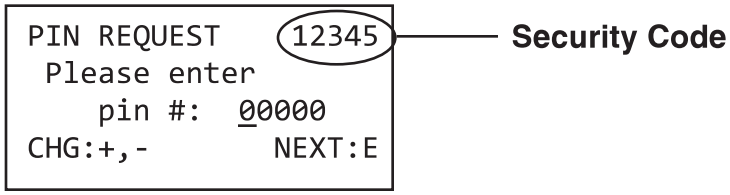

2. Press **[+]** to increment the numeral.
3. Press **[E]** to move the cursor to the next digit.
4. Repeat the steps to set each of the five digits to match your PIN.
5. Press **[E].** If you entered a valid PIN, the **Main Menu** opens inidicating your level of access.

   If you entered the wrong PIN, you will see the following display:



   - Press **[E]** to return to the **PIN Request** display.
   - Repeat Steps 1 through 5.

Note: Be sure to log off when you have completed work with the M-2000. Otherwise, there will be a five-minute delay between your last activity and the time when the M-2000 will automatically log you off.

Setting Up the M-2000 with Quick Setup

The M-2000 provides you with a Quick Setup utility that allows you to set or change your Flow Units, Totalizer Units, Full Scale Flow and Low Flow Cutoff settings. To open the Quick Setup, select Quick Setup from the Start menu.

Quick Setup

Flow Unit

[GPM]

Flow Unit lets you set the unit of measure for the flow rate and full scale flow.

To change the Flow Unit value, follow these steps from the **Quick Setup menu**.

1. Select **Flow Unit** to view the Flow Unit display.
2. Press [↑] or [↓] to position the arrow next to one of the following Flow Units:

Code	*Flow Unit*	*Code*	*Flow Unit*
LPS	Liter/Second	GPM	Gallons/Min.
LPM	Liter/Minute	GPH	Gallons/Hour
LPH	Liter/Hour	MGD	MegaGallon/Day
M3S	Cubic Meter/Sec.	IGS	UKG/Sec.
M3M	Cubic Meter/Min.	IGM	UKG/Min.
M3H	Cubic Meter/Hour	IGH	UKG/Hour
F3S	Cubic Feet/Sec.	LbM	Pound/Min.
F3M	Cubic Feet/Min.	OPM	Ounce/Min
F3H	Cubic Feet/Hour	BPM	Barrel/Min
GPS	Gallons/Sec.	--	--

3. Press **[E]** to save the Flow Units setting.

Totalizer Unit

[USG]

This parameter establishes the units of measure for the totalizers.

To change the Totalizer Unit value, follow these steps from the **Totalizer Unit** display.

1. Press [↑] or [↓] to position the arrow next to one of the following Totalizer Units:

Code	*Totalizer Unit*	*Code*	*Totalizer Unit*
L	Liters	UKG	Imperial Gallons
HL	HectoLiters	Lb	Pounds
M^3	Cubic Meters	Oz	Fluid Ounces
CFt	Cubic Feet	Aft	Acre Feet
USG	U.S. Gallons	BBL	Barrel
MG	MegaGallons		

2. Press **[E]** to save the Totalizer Units setting.

Quick Setup	
Full Scale Flow	This parameter sets the maximum flow the system is expected to measure. This parameter has influence on other system parameters. These parameters include: • Frequency Output – Full scale frequency is observed at full scale flow • Low Flow Cutoff – Changes to full scale flow affect the measuring cut-off threshold of the meter • Alarm Outputs – Changes to full scale flow adjusts the thresholds for generating set point alarms • Pulse Outputs – Changes to full scale flow adjusts the pulse frequency and duty cycle • Analog Outputs – Changes to full scale flow adjusts the interpretation of the analog output signal Change the full scale flow based on the meter size and the application's requirements. Verify that the full scale flow falls within the meter's suggested flow range limits. In terms of flow velocity, the meter's limits are from 0.1 to 39.4 feet/second. The full scale flow is valid for both flow directions. **Note: If the flow rate exceeds the full scale setting, an error message indicates that the configured full scale range has been exceeded. However, the meter will continue to measure. This will affect the latency of the pulse outputs and possibly cause overflow. Furthermore, the analog output may also be placed in alarm mode.** To set or change the Full Scale Flow, follow these steps from the **Quick Setup menu**: 1. Select **Full Scale Flow** to view the Full Scale Flow display. 2. Set the full scale flow value to the desired setting. 3. Press **[E]** to save the full scale flow value and return to the Measurements menu.
Low Flow Cutoff	Low flow cutoff defines the threshold at which flow measurement will be forced to zero. The cutoff value can be set from 0% to 10% of the full scale flow. Increasing this threshold will help prevent false readings during "no flow" conditions possibly caused by pipe vibration or inherent system noise. To change Low Flow Cutoff, follow these steps from the **Low Flow Cutoff** display. 1. Set the Low Flow Cutoff value to the desired setting, between 0% and 10%. 2. Press **[E]** to save the value.

Using the M-2000's Main Menu Programming Options

The following M-2000 programming options are available from the Main Menu:

- Meter Setup
- Measurements
- Inputs/Outputs
- Clear Totals
- Communications
- Advanced
- Info/Help
- Language Select

In the section that follows, the applicable security level for each menu option is indicated as follows:



Administrative



Service



User

Options that can be set at Quick Setup are indicated with: 

The factory default values are shown, enclosed in brackets.

Note: Options that are listed [Factory Set] should not be changed without specific directions from authorized Badger Meter personnel.

Meter Setup	
Scale Factor [0.0%] 	Changing the scale factor lets you adjust the meter's accuracy without disturbing factory-set parameters. You can tune the meter to meet changing application requirements. For example, if the meter is under registering by 0.5 percent then set the scale factor to +0.5%. If the meter is over registering by 0.5 percent then set the scale factor to -0.5%. To set the Scale Factor, follow these steps from the **Meter Setup menu**: 1. Select **Scale Factor**, to open the Detector Factor display. 2. Set the Detector Factor value to the desired setting. 3. Press **[E]**, to save the new value and return to the Meter Setup menu.
Empty Pipe Detect [Off] 	When set to On, Empty Pipe Detect indicates to the outputs and the display that the meter is not completely filled. When set to Off, empty pipe detect is disabled. Enabling empty pipe detect requires a one-time calibration. Calibration is described in the Advance Menu section under Empty Pipe Cal. To set Empty Pipe Detect, follow these steps from the **Meter Setup menu**: 1. Select **Empty Pipe Detect** to view the Empty Pipe Detect display. 2. Position the arrow next to **On** or **Off**. 3. Press **[E]** to save the Empty Pipe Detect On or Off and return to the Meter Setup menu.

Meter Setup

Power Line Freq

[60 Hz]



This parameter provides measuring immunity to industrial noise from a power supply feed.

To set Power Line Frequency, follow these steps from the **Meter Setup menu**:

1. Select **Power Line Freq** to view the Power Line Frequency display.
2. Position the arrow next to **50 Hz** or **60 Hz**.
3. Press **[E]** to save the power line frequency and return to the Meter Setup menu.

Excitation Freq

[Factory Set]



This parameter is set at the factory. You can change Excitation Freq to configure the DC excitation of the coils. Supported frequencies are dependent on the configured power line frequency:

50 Hz	**60 Hz**
1 Hz	1 Hz
3.125 Hz	3.75 Hz
6.25 Hz	7.5 Hz
12.5 Hz	15 Hz

To change Excitation Frequency, follow these steps from the **Meter Setup menu**:

1. Select **Excitation Freq** to view the Excitation Frequency display.
2. Position the arrow next the desired frequency.
3. Press **[E]** to save the excitation frequency and return to the Meter Setup menu.

Pipe Diameter

[Factory Set]



This parameter is set at the factory. In the event the amplifier is replaced, verify that the pipe diameter matches the installed pipe size.

To change Pipe Diameter, follow these steps from the **Meter Setup menu**:

1. Select **Pipe Diameter** to open the Pipe Diameter display.
2. Position the arrow next to one of the following pipe diameters.

6mm [1/4"]	65mm [2 1/2"]	400mm [16"]	1000mm [40"]
8mm [1/4"]	80mm [3"]	450mm [18"]	1050mm [42"]
10mm [1/4"]	100mm [4"]	500mm [20"]	1200mm [48"]
15mm [1/4"]	125mm [5"]	550mm [22"]	1400mm [54"]
20mm [1/4"]	150mm [6"]	600mm [24"]	1600mm [64"]
25mm [1 "]	200mm [8"]	700mm [28"]	1800mm [72"]
32mm [1 1/4"]	250mm [10"]	750mm [30"]	2000mm [80"]
40mm [1 1/2"]	300mm [14"]	800mm [32"]	Other
50mm [2"]	350mm [14"]	900mm [36"]	

3. Press **[E]** to save the pipe diameter and return to the Meter Setup menu.

Meter Setup

Detector Factor [Factory Set] 	This parameter is set at the factory. This factor compensates for accuracy error as a result of the installed detector. If accuracy adjustment of the meter is required, please refer to the scale factor. In the event the amplifier is replaced, this parameter must be reprogrammed with the original detector factor.
Detector Offset [Factory Set] 	This parameter is set at the factory. This parameter compensates for accuracy error as a result of the installed detector. If accuracy adjustment of the meter is required, please refer to the scale factor.

Measurements

Flow Units

[GPM]



Flow Units lets you set the unit of measure for the flow rate and full scale flow. Changing the flow units parameter readjusts the full scale flow parameter. For example, changing from GPM to GPS would change the full scale flow from 60 GPM to 1 GPS.

To change the Flow Unit, follow these steps from the **Measurements menu**:

1. Select **Flow Units** to view the Flow Units display.
2. Position the arrow next to one of the following flow unit options:

Code	***Flow Unit***	***Code***	***Flow Unit***
LPS	Liter/Second	GPM	Gallons/Min.
LPM	Liter/Minute	GPH	Gallons/Hour
LPH	Liter/Hour	MGD	MegaGallon/Day
M3S	Cubic Meter/Sec.	IGS	UKG/Sec.
M3M	Cubic Meter/Min.	IGM	UKG/Min.
M3H	Cubic Meter/Hour	IGH	UKG/Hour
F3S	Cubic Feet/Sec.	LbM	Pound/Min.
F3M	Cubic Feet/Min.	OPM	Ounce/Min
F3H	Cubic Feet/Hour.	BPM	Barrel/Min
GPS	Gallons/Sec.		

3. Press **[E]** to save the flow units and return to the Measurements menu.

Measurements

Totalizer Unit

[USG]



This parameter establishes the units of measure for the totalizers.

To change the Totalizer Unit value, follow these steps from the **Measurements menu**:

1. Select **Totalizer Unit** to view the Totalizer Unit display.
2. Position the arrow next to one of the following totalizer units:

Code	*Totalizer Unit*	*Code*	*Totalizer Unit*
L	Liters	UKG	Imperial Gallons
HL	HectoLiters	Lb	Pounds
M^3	Cubic Meters	Oz	Fluid Ounces
CFt	Cubic Feet	Aft	Acre Feet
USG	U.S. Gallons	BBL	Barrel
MG	MegaGallons		

3. Press **[E]** to save the totalizer unit and return to the Measurements menu.

Full Scale Flow

[Factory Set]



This parameter sets the maximum flow the system is expected to measure. This parameter has influence on other system parameters. These parameters include:

- Frequency Output – Full scale frequency is observed at full scale flow
- Low Flow Cutoff – Changes to full scale flow affect the measuring cut-off threshold of the meter
- Alarm Outputs – Changes to full scale flow adjusts the thresholds for generating set point alarms
- Pulse Outputs – Changes to full scale flow adjusts the pulse frequency and duty cycle
- Analog Outputs – Changes to full scale flow adjusts the interpretation of the analog output signal

Change the full scale flow based on the meter size and the application's requirements. Verify that the full scale flow falls within the meter's suggested flow range limits. In terms of flow velocity, the meter's limits are from 0.1 to 39.4 feet/second.

The full scale flow is valid for both flow directions.

Note: If the flow rate exceeds the full scale setting, an error message indicates that the configured full scale range has been exceeded. However, the meter will continue to measure. This will affect the latency of the pulse outputs and possibly cause overflow. Furthermore, the analog output may also be placed in alarm mode.

To change the Full Scale Flow, follow these steps from the **Measurements menu**:

1. Select **Full Scale Flow** to view the Full Scale Flow display.
2. Set the full scale flow value to the desired setting.
3. Press **[E]** to save the full scale flow value and return to the Measurements menu.

Measurements

Low Flow Cutoff

[0.2%]



Low flow cutoff defines the threshold at which flow measurement will be forced to zero. The cutoff value can be set from 0% to 10% of the full scale flow. Increasing this threshold will help prevent false readings during "no flow" conditions possibly caused by pipe vibration or inherent system noise.

To change the Low Flow Cutoff value, follow these steps from the **Measurements menu**:

1. Select **Low Flow Cutoff** to view the Low Flow Cutoff display.
2. Set the low flow cutoff value to the desired setting.
3. Press **[E]** to save the new low flow cutoff value.

Flow Direction

[Bi-Directional]



Flow direction lets you set the meter to measure forward flow only (uni-directional) or both forward and reverse flow (bi-directional).

Uni-Directional

Flow is totalized in only one direction. The flow direction is indicated by the arrow printed on the detector label. Uni-directional measurements on the main display screen include:

- T1: Registers forward flow, resettable by menu or Modbus RTU
- T2: Registers forward flow, resettable by menu, Modbus RTU, or digital input configured for Remote Reset

Bi-Directional

Flow is totalized in both directions. Bi-directional measurements on the main display screen include:

- T+: Registers forward flow, resettable by menu or Modbus RTU
- T-: Registers reverse flow, resettable by menu or Modbus RTU
- TN: Registers total flow, T+ - T-, resettable by menu or Modbus RTU

To change the flow direction follow these steps from the **Measurements menu**:

1. Select **Flow Direction** to view the Flow Direction display.
2. Select **Uni-Directional** or **Bi-Directional**.
3. Press **[E]** to save the flow direction and return to the Measurements menu.

Damping Factor

[No Damping]



The damping factor establishes the stability of the measured flow rate. If back and forth oscillations of the flow rate are observed during normal flow conditions, increase this value incrementally until the flow rate stabilizes. This parameter has no affect on the totalizers.

To change the Damping Factor value, follow these steps from the **Measurements menu**:

1. Select **Damping Factor** to view the Damping Factor display.
2. Select one of the following damping factors:

1 Second	10 Seconds
2 Seconds	20 Seconds
3 Seconds	30 Seconds
4 Seconds	No Dampening
5 Seconds	

3. Press **[E]** to save the damping factor and return to the Measurements menu.

<table>
<tr><th colspan="3">Inputs/Outputs</th></tr>
<tr><td rowspan="2">Analog Output</td><td>Range

[4 to 20 mA]

  </td><td>This parameter establishes the range of the analog output signal. To change Analog Output range, follow these steps from the Inputs/Outputs menu:

1. Select Analog Output to view the Analog Output display.

2. Select one of the following options:

• 4 to 20 mA
• 0 to 20 mA
• 2 to 10 mA
• 0 to 10 mA

3. Press [E] to save the analog output and return to the Inputs/Outputs menu.</td></tr>
<tr><td>Alarm Mode

[HIGH]

  </td><td>This parameter configures the behavior of the analog output during alarm conditions. Three options exist for this parameter: OFF, LOW, and HIGH.

OFF: Analog signal is based on flow rate and always within the configured range

LOW: During alarm conditions, the analog signal will be 2mA less than the configured lower range

HIGH: During alarm conditions, the analog signal will be 2mA more than the configured upper range

For example, if the analog range is 4 to 20 mA and the alarm mode is set to HIGH, then during a full scale flow alarm condition, the analog output current will be 22 mA.

To change the analog output alarm mode, follow these steps from the Inputs/Outputs menu:

1. Select Alarm Mode to view the Alarm Mode display.

2. Select one of the following options:

• OFF
• LOW
• HIGH

3. Press [E] to save the alarm mode and return to the Inputs/Outputs menu.</td></tr>
<tr><td>Digital Input</td><td colspan="2">Digital input lets you configure the functional operation of the digital input. The following functions are supported:

• Remote Reset – Clears totalizer T2 (uni-directional)
• Batch Reset – Resets batch totalizer PS to preset amount and clears T2 (uni-directional)
• Pos Zero Return – Forces flow rate to zero (does not totalize)

To change Digital Input, follow these steps from the Inputs/Outputs menu:

1. Select Digital Input to view the Digital Input display.

2. Select the desired function.

3. Press [E] to save the digital input and return to the Inputs/Outputs menu.</td></tr>
</table>

Inputs/Outputs		
Digital Output	***Pulses/Unit*** [1] 	The Pulses/Unit parameter lets you set how many pulses per unit of measure will be transmitted to remote applications. For example, assuming the unit of measure is gallons: • Setting the Pulses/Unit to 1 will transmit 1 pulse every gallon • Setting the Pulses/Unit to 0.01 will transmit 1 pulse every 100 gallons You must configure pulses/unit if the function of the selected output is to be forward, reverse or AMR pulse. This parameter must be considered with the Pulse Width and Full Scale Flow parameters. The maximum pulse frequency is 10 kHz. The frequency is correlated with the flow rate. Violation of output frequency limits will generate a configuration error. To change the pulses/unit, follow these steps from the **Inputs/Outputs menu**: 1. Select **Digital Output 1** or **2** and press **[E]** to open the Digital Output menu. 2. From the **Digital Output menu** select **Pulses/Unit**, and press **[E]** to open the Pulses/Unit display. 3. Enter the pulses/unit value. Press **[E]** to save the new parameter and return to the Digital Output menu.
	Pulse Width [0 ms] 	This parameter establishes the On duration of the transmitted pulse. The configurable range is from 0 to 1000 ms. • Non-zero pulse width configuration – the Off duration of the transmitted pulse is dependent on flow rate. The Off duration is to be at least the configured On duration. At full scale flow, the On duration equals the Off duration. The maximum configurable output frequency is limited to 500 Hz. • 0 ms pulse width configuration – the duty cycle of the transmitted pulse is at 50 percent allowing for a maximum configurable output frequency of 10 kHz. This parameter must be considered with the Pulses/Unit and Full Scale Flow parameters. The maximum pulse frequency is 10 kHz. The frequency is correlated with the flow rate. Violation of output frequency limits will generate a configuration error. To change the pulse width, follow these steps from the **Inputs/Outputs Menu**: 1. Select **Digital Output 1** or **2** and press **[E]** to open the Digital Output menu. 2. From the **Digital Output menu** select **Pulse Width**, and press **[E]** to open the Pulse Width display. 3. Enter the pulse width value. Press **[E]** to save the new parameter and return to the Digital Output menu.

Inputs/Outputs		
Digital Output	***Preset Amount*** [0.0] 	Preset amount lets you set the reset value for the associated PS totalizer when the digital input is set to Batch Reset. To change the preset amount, follow these steps from the **Inputs/Outputs Menu:** 1. Select **Digital Output 1**, **2, 3 or 4** and press **[E]** to open the Digital Output menu. 2. From the **Digital Output menu** select **Preset Amount**, and press **[E]** to open the Preset Amount display. 3. Enter the preset amount value. Press **[E]** to save the new parameter and return to the Digital Output menu. **Note: You can only set one Preset Amount. If you set the Preset Amount for Digital Output 1, it will be the same for 2, 3 and 4.**
	Set Point Min. [0%] 	This parameter establishes, as a percentage of full scale flow, the threshold at which the output alarm will be activated. Flow rates below the threshold will activate the output alarm. To change the set point minimum, follow these steps from the **Inputs/Outputs Menu**: 1. Select **Digital Output 1**, **2, 3 or 4** and press **[E]** to open the Digital Output menu. 2. From the **Digital Output menu** select **Set Point Min.**, and press **[E]** to open the Set Point Min. display. 3. Enter the set point minimum value. Press **[E]** to save the new parameter and return to the Digital Output menu.
	Set Point Max. [100%] 	This parameter establishes, as a percentage of full scale flow, the threshold at which the output alarm will be activated. Flow rates above the threshold will activate the output alarm. To change the maximum set point, follow these steps from the **Inputs/Outputs Menu**: 1. Select **Digital Output 1**, **2, 3 or 4** and press **[E]** to open the Digital Output menu. 2. From the **Digital Output menu** select **Set Point Max.**, and press **[E]** to open the Set Point Max. display. 3. Enter the set point maximum value and press **[E]** to save the new parameter and return to the Digital Output menu.

Inputs/Outputs		
Digital Output	***Output Type*** [1: Normally Open] [2: Normally Open] [3: Normally Open] [4: Normally Closed] 	The Output Type parameter lets you set the output switch to normally open or normally closed. If normally open is selected, the output switch is open (no current) when the output is inactive, and closed (current flows) when the output is active. If normally closed is selected, the output switch is closed (current flows) when the output is inactive, and open (no current) when the output is active. To change the Output Type, follow these steps from the **Inputs/Outputs Main Menu**: 1. Select **Digital Output 1**, **2, 3 or 4** and press **[E]** to open the Digital Output menu. 2. From the **Digital Output menu,** select **Output Type**, and press **[E]** to open the Output Type display. 3. Select **Normally Open** or **Normally Closed**. 4. Press **[E]** to save the new parameter and return to the Digital Output menu.
	Hardware Type [3: Open Collector] [4: Open Collector] 	The hardware type parameter lets you select the type of hardware used to drive the output signal: either open collector or solid-state relay. To change the Hardware Type, follow these steps from the **Inputs/Outputs Main Menu**: 1. Select **Digital Output 3 or 4** and press **[E]** to open the Digital Output menu. 2. From the **Digital Output menu** select **Hardware Type**, and press **[E]** to open the Hardware Type display. 3. Select **Open Collector** or **Relay**. 4. Press **[E]** to save the new parameter and return to the Digital Output menu.
	Full Scale Frequency [3: 1000 Hz] 	This parameter establishes the full scale flow output frequency when the flow rate equals the configured full scale flow. To change the Full Scale Frequency, follow these steps from the **Inputs/Outputs Main Menu**: 1. Select **Digital Output 3** and press **[E]** to open the Digital Output menu. 2. From the **Digital Output menu** select **Full Scale Frequency**, and press **[E]** to open the Full Scale Frequency display. 3. Set the full scale frequency value to the desired setting. 4. Press **[E]** to save the new parameter and return to the Digital Output menu.

<table>
<tr><th colspan="3">Inputs/Outputs</th></tr>
<tr><td>Digital Output</td><td>Select Function

[1: Forward Pulse]

[2: Reverse Pulse]

[3: Frequency Pulse]

[4: Error Alarm]

  </td><td>Digital Output lets you configure the functional operation of the associated output. The following operations are supported:

• Reverse Pulse – Generates pulses during reverse flow conditions

• Forward Pulse – Generates pulses during forward flow conditions

• Frequency Output – Generates pulses correlated to the absolute value of the flow rate

• Preset Output – Provides indication when preset batch amount has been realized

• Flow Set Point – Provides indication when flow rate exceeds thresholds defined by flow set points

• 24 Vdc Supply – Provides constant 24 volts on output (forces output type to normally open)

• Error Alarm – Provides indication when meter has error condition. Error conditions include, empty pipe error, full scale flow error, and detector error

• Flow Direction – Provides indication on current flow direction (Inactive = Reverse or No Flow, Active = Forward)

• Empty Pipe Alarm – Provides indication when pipe is empty

To change the Function Select, follow these steps from the Inputs/Outputs Main Menu:

1. Select Digital Output 1, 2, 3 or 4 and press [E] to open the Digital Output menu.

2. From the Digital Output menu choose Select Function, and press [E] to open the Select Function display.

3. Select the desired function.

4. Press [E] to save and return to the Digital Output menu.</td></tr>
<tr><td>Flow Simulation

[Off]

  </td><td colspan="2">Flow Simulation provides output simulation based on a percentage of the full scale flow. Simulation will not accumulate the totalizers. The range of simulation includes -100% to 100% of the full scale flow.

The Flow Simulation Parameter lets you set the range of simulation in 10% increments.

To change the Flow Simulation, follow these steps from the Inputs/Outputs menu:

1. Select Flow Simulation to view the Flow Simulation display.

2. Click [+] to increment the percentage by 10, or click [-] to decrement the percentage by 10.

3. Press [E] to save the displayed setting and return to the Inputs/Outputs menu.</td></tr>
</table>

Clear Totals	
T1 	The uni-directional totalizer is reset within the the menu manager or through remote communications. Clearing T1 also clears the associated rollover counter.
T2 	The uni-directional totalizer is reset within the the menu manager, through remote communications or with properly-configured digital input (function = remote reset). Clearing T2 also clears the associated rollover counter.
T+ 	The bi-directional forward flow totalizer is reset within the the menu manager or through remote communications. Clearing T+ also clears the associated rollover counter.
T- 	The bi-directional reverse flow totalizer is reset within the the menu manager or through remote communications. Clearing T- also clears the associated rollover counter.
Tn 	The bi-directional net totalizer, when reset, clears both the forward and the reverse flow totalizers (T+ and T-). This is reset within the the menu manager or through remote communications. Clearing Tn also clears the associated rollover counter.
PS 	The batch totalizer is reset to the configured preset amount value. It is reset within the menu manager, remote communications or through a properly-configured digital input (function = batch reset).
Tpwroff 	The totalizer accumulating meter time without external power is reset with the menu manager or through remote communications.

Communication: Port Settings	
Interface [Modbus RTU] 	The Interface parameter lets you configure how the RS232 communication port will be used. • Modbus RTU • Remote menu (RDI - Remote Display Interface) • Disable port The remote menu interface will check for display updates once a second. If a change is detected, the display contents will be transmitted in ASCII format over the RS232 communication port. The remote menu interface also allows for menu navigation and control of the meter as if using the external push buttons. Keyboard control characters such as <UP>,<DWN>, and <ENTER> are supported to navigate the menus. To change the Interface follow these steps from the **Port A Settings menu**: 1. Select **Interface** to view the Interface display. 2. Select the desired interface. 3. Press **[E]** to save and return to the Port A Settings menu.

Communication: Port Settings	
Port Address [1] 	This parameter establishes the Modbus RTU address. Modbus RTU requests will only be processed if the configured port address of the meter matches the request address found in the Modbus RTU packet. The range of addresses supported by Modbus RTU is 1-247. Modbus RTU request packets with an address of 0 imply the packet is to be treated as a broadcast packet. To change the port address, follow these steps from the **Port A Settings menu**: 1. Select **Port Address** to view the port address display. 2. Select the desired port address **(1-247)**. 3. Press **[E]** to save the option and to return to the Port A Settings menu.
Baud Rate [9600] 	The following baud rates are supported • 9600 • 19200 • 38400 To change the baud rate, follow these steps from the **Port A Settings menu**: 1. Select **Baud Rate** to view the Baud Rate display. 2. Select one of the following baud rates: **9600**, **19200** or **38400**. 3. Press **[E]** to save the option and to return to the Port A Settings menu.
Parity [Even] 	The following parities are supported • Even • Odd • None To change the parity, follow these steps from the **Port A Settings menu**: 1. Select **Parity** to view the Parity display. 2. Select one of the following: **None**, **Even** or **Odd**. 3. Press **[E]** to save the option and to return to the Port A Settings menu.
Data Bits [8 bits] 	This parameter configures the port data bits. The following data bits are supported • 8 bits • 7 bits • 5 bits To change the data bits, follow these steps from the **Port A Settings menu**: 1. Select **Data Bits** to view the Data Bits display. 2. Select one of the following: **8 Bits**, **7 Bits** or **5 Bits**. 3. Press **[E]** to save the option and to return to the Port A Settings menu.

Communication: Port Settings

Stop Bits

[1 Stop Bit]



This parameter configures the port stop bits. The following stop bits are supported:

- 1 Stop Bit
- 2 Stop Bits

To change the stop bits, follow these steps from the **Port A Settings menu**:

1. Select **Stop Bits** to view the Stop Bits display.
2. Select one of the following: **1 Stop Bit**, or **2 Stop Bits**.
3. Press **[E]** to save the option and to return to the Port A Settings menu.

Communication: Diagnostics

Port Counters

[0]



Port counters are used for diagnostics when configured for Modbus RTU. These counters are only cleared on power up.

Counter	Description
Pkts Processed	Number of packets processed by meter.
Broadcast Pkts	Number of broadcast packets (address = 0) processed by meter.
CRC Errors	Number of received packets with CRC error; packet is discarded.
Pkts Rcvd	Number of packets received with an address of the configured port address.
Pkts Sent	Number of packets transmitted in response to a received packet.
Parity Errors	Number of characters with parity errors (*i.e.,* received character has a mismatch between the number of 1s and its parity bit); packet is discarded.
Framing Errors	Number of characters with framing errors (*i.e.* missing stop bit is not found – indicates that synchronization with the start bit has been lost and that the character is improperly framed); packet is discarded.
Overrun Errors	Number of characters received that were not processed due to degradation of system performance.
Break Detects	Number of detections that transmission line is locked (*i.e.,* receive line is low for 10-bit transmissions following a missing stop bit).

Advanced

Unit Multiplier

[Off]



This Unit Multiplier establishes the number of units of measure that have to accumulate before the display totalizers are updated. This is also known as setting the number of "dead" zeroes in the display totalizer. For example:

Unit Multiplier less than 1					
Unit Multiplier	Example				
OFF	0.00000 USG	0.00012 USG	0.00123 USG	0.01234 USG	0.12345 USG
0.0001	0.0000 USG	0.0001 USG	0.0012 USG	0.0123 USG	0.1234 USG
0.001	0.000 USG	0.000 USG	0.001 USG	0.012 USG	0.123 USG
0.01	0.00 USG	0.00 USG	0.00 USG	0.01 USG	0.12 USG
0.1	0.0 USG	0.0 USG	0.0 USG	0.0 USG	0.1 USG

Unit Multiplier greater than or equal to 1					
Unit Multiplier	Example				
OFF	0.00000 USG	1.23456 USG	12.34567 USG	123.4567 USG	1234.456 USG
1	0 USG	1 USG	12 USG	123 USG	1234 USG
10	0 USG	0 USG	10 USG	120 USG	1230 USG
100	0 USG	0 USG	0 USG	100 USG	1200 USG
1000	0 USG	0 USG	0 USG	0 USG	1000 USG

To change the Unit Multiplier, follow these steps from the **Advanced menu:**

1. Select **Unit Multiplier** to view the Unit Multiplier display.
2. Select the desired unit multiplier.
3. Press **[E]** to save the option and to return to the Advanced menu.

Backlight Control

[Timed Off]



You can set the meter's backlight to: Always On, Always Off and Timed Off.

When set to Timed Off, the backlight will automatically turn off after one minute of inactivity (no buttons pressed). Pressing any button will turn the backlight on, but will not immediately navigate the menu.

To change the backlight control, follow these steps from the **Advanced menu**:

1. Select **Backlight Control** to view the Backlight Control display.
2. Select the desired option.
3. Press **[E]** to save the option and to return to the Advanced menu.

Advanced		
Analog Calibrate	***Custom Settings*** [Zero Scale: 0 mA] [Full Scale: 0 mA] 	Scale/Full Scale offsets on site. To set the analog calibration custom settings, follow these steps from the **Advanced menu**: 1. Select **Analog Calibrate** to view the Analog Calibrate menu. 2. Select **Custom Settings** to view the Custom Settings display. 3. Select one of the following: • **Offset 4 mA** • **Offset 20 mA** 4. Configure desired offset. 5. Press **[E]** to save the option and to return to the Custom Settings menu. 6. Press **[E]** to return to the Analog Calibrate menu.
	Factory Settings [Factory Set] 	To change the analog calibration factory settings, follow these steps from the **Advanced menu**: 1. Select **Analog Calibrate** to view the Analog Calibrate menu. 2. Select **Factory Settings** to view the Factory Settings display. 3. Select one of the following: • **Calibration Point A** • **Calibration Point B** 4. Set the calibration point to the measured output current. 5. Press **[E]** to save the option and to return to the Custom Settings menu. 6. Press **[E]** to return to the Analog Calibrate menu.

Advanced		
Software Filter	***Description***	The software filter operates as an acceleration filter. This filter when configured properly allows for filtering of fast changes in fluid flow. Generally, this filter is used in applications having highly conductive fluids. This filter is intended to help provide smoothing of the analog output and display fluctuations.
	Activation [Off] 	This parameter setting enables or disables the software acceleration filter. To change the Activation setting, follow these steps from the **Advanced menu**: 1. Select **Activation** from the Advanced menu. 2. Select the desired setting. 3. Press **[E]** to save the option and to return to the Advanced menu.
	Filter Delay [1] 	Filter Delay lets you set the amount of time that the flow will be held constant once the filter is activated. The filter is activated by an acceleration component of the fluid exceeding the configured limit. To change the Filter Delay follow these steps from the **Advanced menu**: 1. Select **Filter Delay,** from the Advanced menu. 2. Select the desired setting. 3. Press **[E]** to save the option and to return to the Advanced menu.
	Acceleration Factor [1] 	This parameter lets you set the maximum acceleration for a given pipe diameter and is dependent on the excitation frequency. The maximum fluid velocity is 12 m/s. The following equation defines the maximum fluid acceleration: Acceleration(MAX) = Acceleration Factor * 12 m/s * Pipe Area * Excitation Frequency / 1.5. If the realized fluid acceleration exceeds the configured maximum acceleration, fluid flow will be held constant for the time set at the Filter Delay parameter. To change the Acceleration Factor setting, follow these steps from the **Advanced menu**: 1. Select **Acceleration Factor** from the Advanced menu. 2. Select the desired setting. 3. Press **[E]** to save the option and to return to the Advanced menu.

Advanced		
Software Filter	***Constant Flow*** [150 M^3/Sec^2] 	During normal flow conditions, there is always a non-zero acceleration component. For example, if acceleration of the flow activates the filter, the meter will assume constant flow for the duration of the filter delay time unless the flow returns within limits. Properly configured, this parameter will help offset excessive impacts of the filter delay. The Constant Flow parameter lets you set the acceleration limit for constant flow. To change the Constant Flow setting, follow these steps from the **Advanced menu:** 1. Select **Constant Flow** from the Advanced menu. 2. Select the desired setting. 3. Press **[E]** to save the option and to return to the Advanced menu.
	Peak Detect [0 M^3/Sec^2] 	Peak Detect offers a diagnostic view of the acceleration components observed during flow conditions. This parameter records the "high water mark" of the measured accelerations component. This value will help to properly configure the Acceleration Factor parameter. Generally, you will set the acceleration factor at about 75% of the Peak Detect measurement. To reset the Peak Detect setting, follow these steps from the **Advanced menu:** 1. Select **Peak Detect** from the Advanced menu. 2. Press **[+]** to reset. 3. Press **[E]** to return to the Advanced menu.

Advanced	

Empty Pipe Cal.
 	
[Default]
 	
 
	Fluid conductivity impacts the performance of empty pipe measurements. If you require empty pipe detection, you should perform this empty pipe calibration procedure.
	
	Before starting the empty pipe calibration, verify that empty pipe detection is enabled. Also, run both the empty pipe and the full pipe calibration procedures.
	
	Calibrating an Empty Pipe
	
	Before calibrating an empty pipe, verify that the pipe is empty.
	
	To calibrate with an empty pipe, follow these steps from the **Advanced menu:**
	
	1. Select **Empty Pipe Cal** to view the calibration menus.
	2. Select **Cal. Empty Pipe** to view the empty pipe calibration menu.
	3 Enable calibration by placing the cursor on the calibration enable line and press **[E]**.
	
	`EMPTY PIPE CALIBRATE`
	` Volts = 3.00`
	`>Cal [ON]  E=OFF`
	` Exit with Save`
	
	4. Wait 30 seconds for voltage measurement to stabilize.
	5. Save setting by placing the cursor on Exit With Save menu line and press **[E]**.
	
	Calibrating a Full Pipe
	
	Before calibrating a full pipe, verify that the pipe is full.
	
	To calibrate with a full pipe, follow these steps from the **Advanced menu:**
	
	1. Select **Cal. Full Pipe** to view the calibration menus.
	2. Select **Cal. Full Pipe** to view the full pipe calibration menu.
	3 Enable calibration by placing the cursor on the calibration enable line and press **[E]**.
	
	`FULL PIPE CALIBRATE`
	` Volts = 1.515`
	`>Cal [OFF]  E=ON`
	` Exit with Save`
	
	4. Wait 30 seconds for voltage measurement to stabilize.
	5. Save setting by placing the cursor on Exit With Save menu line and press **[E]**.

Advanced		
Security	***Set Admin PIN*** [00000] 	Users logged in with this PIN will have access to all M-2000 procedures. To set the administrator's PIN, follow these steps from the **Advanced Menu**: 1. Select **Security** to view the Security menu. 2. Select **Set Admin PIN** to view the Admin PIN display. 3. Set the five-digit PIN number to the desired value. 4. Press **[E]** to save the PIN and to return to the Security menu.
	Set Service PIN [00000] 	Users logged in with this PIN will have access to all service level and user-level procedures. Service users will not have access to administrative procedures. To set the service PIN, follow these steps from the **Advanced Menu**: 1. Select **Security** to view the Security menu. 2. Select **Set Service PIN** to view the Service PIN display. 3. Set the five-digit PIN number to the desired value. 4. Press **[E]** to save the PIN and to return to the Security menu.
	Set User PIN [00000] 	Users logged in with this PIN will have access to user-level procedures. User at this level will not have access to administrative or service procedures. To set the user's PIN, follow these steps from the **Advanced Menu:** 1. Select **Security** to view the Security menu. 2. Select **Set User PIN** to view the User PIN display. 3. Set the five-digit PIN number to the desired value. 4. Press **[E]** to save the PIN and to return to the Security menu.

Info/Help		
Error Counts [0] 	***Description***	This menu provides a diagnostic view of the meter's performance. Below are several system diagnostic counters and their definitions. Use discretion when interpreting these counters. These values could be altered during system setup or when using the verification device. We suggest that you reset these counters before you start monitoring your system and look for conditions possibly affecting performance.
	Detector	The number of times an invalid detector condition has been observed.
	Empty Pipe	The number of times an empty pipe condition has been observed by the meter.
	Full Scale	The number of times the flow has exceeded the full scale flow setting.
	Totalizer	The number of times the totalizers have exceeded limits of the meter.
	Pulse Sync.	The number of times the pulse outputs have fallen out of synchronization.
	ADC Interrupt	The number of times an analog input measurement has been missed.
	ADC Range	The number of times the analog input measurement range has been exceeded.
	System Error	A diagnostic system message indicating the reason for a system reset.
	System Resets	The number of times the meter has been reset.
	System Reset ID	Diagnostic information about a system reset as a result of expired internal timers.

Info/Help	
Rollover Counts [0] 	The number of times the totalizers have rolled over 9,999,999,999 (10 billion). As the meter rolls over, a status indicator appears in the display. When this occurs, we suggest that you record the totalizers and rollover counter and reset the totalizers. Resetting totalizers will also clear the rollover counter. For a meter configured in bidirectional mode, rollover is represented by the net totalizer (TN) as "**********". During this condition, the net totalizer (TN) can be calculated using the following equation: $T(FWD) = [(ROLLOVER_{T+} \times 10{,}000{,}000{,}000) + T+]$ $T(REV) = [(ROLLOVER_{T-} \times 10{,}000{,}000{,}000) + T-]$ $TN = T(FWD) - T(REV)$ *Where $ROLLOVER_{Tx}$ is the rollover count for the appropriate totalizer* For a meter configured in unidirectional mode, the totalizer can be calculated using the following equation: $T1 = [(ROLLOVER_{T1} \times 10{,}000{,}000{,}000) + T1]$ $T2 = [(ROLLOVER_{T2} \times 10{,}000{,}000{,}000) + T2]$ *Where $ROLLOVER_{Tx}$ is the rollover count for the appropriate totalizer*
PowerUp Counter [Not applicable] 	The number of times that the unit has been powered on.
Power Off Time [Not applicable] 	The length of time that the unit has been without power.
Version Info [Not applicable] 	The current software version.
Serial Number [Not applicable] 	The manufacturing serial number in the format YYMM####. Where YYMM indicates year and month of manufacturing and #### indicates the sequence number.

Info/Help	
Restore Defaults [Not applicable] 	Restores all non-calibrated parameters to the factory defaults.
Restore Calibration [Not applicable] 	Restores the meter calibration as set at the factory.

Language Select	
Language Select [English] 	The M-2000 supports one alternate language along with English. This alternate language choice is set at the factory. The options are: Spanish, German, Czech or French. To select the language, follow these steps from the **Language Select menu**: 1. Press **[↑]** or **[↓]** to position the arrow/pointer next to either **English** or the **Alternate Language**. 2. Press **[E]** to save the selection.

Maintenance

Mandatory, routine or scheduled maintenance should not be required for the Badger M-2000 Mag Meter electronics or flow tube after proper installation.

However, some occurrences may require personnel to perform the following:

- Flow tube and electrode cleaning
- Fuse replacement
- Circuit board replacement



These maintenance procedures are discussed in this section.

Disconnect main power to the unit before attempting any device maintenance or cleaning.

Do not clean components inside the amplifier or junction box.

Cleaning the Flow Tube and Electrode

At times flow tube, electrodes, amplifier/junction box housings and the amplifier window may need periodic cleaning, depending on process fluid properties, fluid flow rate and surrounding environment.

Clean the flow tube and electrodes by following the material handling and cleaning procedures documented in Material Safety Data Sheet (MSDS) guidelines for the product(s) that were in contact with the flow tube and electrodes.

Should flow tube and/or electrode cleaning become necessary:

1. Disconnect detector from pipeline.
2. Clean electrodes according to MSDS guidelines.
3. Reconnect detector to pipeline.

Replacing the Fuse



Disconnect main power to the unit before attempting any device maintenance.



Risk of electrical shock. Replace the fuse only with 250 VAC, 2 amp, slow blow (5 x 20 mm).

Authorized personnel must replace fuses.

Troubleshooting

The M-2000 mag meter is designed for many years of optimal performance. However, should it malfunction, there are certain things that we recommend you check before contacting our Technical Support department or your local Badger Meter Representative.

Note: If the fluid measured has a high concentration of conductive solids, deposits may accumulate on the internal liner walls and electrodes. These deposits will cause a reduction of the measuring output. Thus, Badger Meter recommends that you remove the meter and inspect the liner and electrodes after six months. If deposits are found, remove them with a soft brush. Repeat inspection process every six months or until an appropriate inspection cycle can be established for the specific application.

Other general conditions include:

Description	Possible Cause	Recommended Action
Flow is present but display is "0"	Digital input is holding flow. Disconnected signal cable. Detector mounted opposite of the main flow direction (see arrow on the nameplate). Coil or electrode cables exchanged. Improper low flow cutoff or full scale flow.	Check signal cable. Turn detector by 180° or switch terminal E1 and E2 or reprogram to bidirectional mode. Check cable connections for cross wiring. Verify digital input configuration. Replace configuration defaults.
Inaccurate measuring	Improper calibration. Wrong calibration parameter. Pipe not fully filled, or air in pipe. Invalid fluid conductivity. Invalid fluid mixture.	Restore calibration defaults. Check the parameters (detector factor and size) according to supplied data sheet. Check if meter is completely filled with fluid. Purge line to eliminate air bubbles.
No display	No power. Incorrect power. Bad wiring connections. Blown fuse.	Apply power. Check power value. Replace fuse. (2 amp, 250 VAC, slow blow (5 x 20 mm) Check display ribbon cable.
Flow rate value known to be wrong	Detector factor. Deposits on electrodes and/or liner. Incorrect pipe size programmed.	Check value on label. Check and remove deposits. Check size if necessary.
Flow rate indication unstable	Cable issue. Grounding issue. Partially full pipe. Air in pipe. Amplifier location - outside electrical. Invalid fluid conductivity.	Make sure cable is shielded and not vibrating. Make sure meter is properly grounded to a good earth ground. Make sure pipe is full of fluid. Make sure fluid does not contain air bubbles. Make sure amplifier is not too close to sources of interference. Electrical interference.

Menu Manager Configuration Errors		
Error	**Description**	**Recommended Action**
110	**Output 1/2:** Pulse Output Configuration Error	This error is observed when improperly configuring the full scale flow, pulse per unit, or pulse width. This error can indicate the following configuration violations: 1. Pulse frequency exceeds limits at full scale flow 2. Pulse duty cycle is less than 50% at full scale flow (pulse on time > pulse off time) Pulse frequency limit is 10 kHz. However, with a non-zero pulse width configuration, the limit is 500 Hz to achieve a 50% pulse duty cycle. If not using the pulse outputs, set the pulses per unit to zero to allow for reconfiguration of the full scale flow. If it is required to use the pulse outputs, reevaluate the pulse output configuration. Consider recording and clearing totalizers prior to changing totalizer units.
120	**Display:** Totalizer Conversion Error – Totalizer cannot be properly converted for display	This error is observed while trying to change the totalizer units. Limits of display will prevent improper configuration of the volume unit dependent on current totalizer values. Consider recording and cleaning totalizers prior to changing totalizer.
121	**Output 1/2:** Pulse Output Configuration Error	This error is observed when changing the totalizer units of measure. This error implies the pulse configuration exceeds limits (see error 110). Please note the pulses per unit is not automatically updated on volume unit reconfiguration. The pulses per unit should be manually changed to accommodate the desired units of measure. It may be necessary to set the pulses per unit to zero then change to the desired totalizer units.
140	**Output 3:** Configuration Error – Full scale frequency exceeds limits of relay (1000 Hz)	Reduce full scale frequency setting of output when hardware is configured for relay operation.
150	**Output 3:** Configuration Error – Full scale frequency exceeds limits (10 kHz)	Reduce full scale frequency setting of output when hardware is configured for open collector operation.

Display Error / Status Messages		
Error Message	**Possible Cause**	**Recommended Action**
Err: Detector	No detector connection with amplifier.	Check detector and cable connections in accordance with this manual.
	Connection between amplifier and detector	Contact Technical Support.
	Supply voltage too low.	Contact Technical Support.
	Grounded coils in meter.	Contact Technical Support.
	Water in detector.	Contact Technical Support.
Err: Empty pipe	Pipe may not be full.	Make sure all trapped air is out of system. If fluid or fluid conductivity recalibrate the parameter.
Err: Full scale	Actual flow rate is exceeding programmed flow.	Reduce flow rate or increase the programmed full scale value by more than 5%.
Err: AD-Range	AD-Converter is exceeding signal limits.	Check the grounding scheme of the meter installation. See grounding section in this manual. Verify pipe is not empty.
Err: AD-INT	Initialization of AD-Converter unsuccessful.	Contact Technical Support.
Err: Rollover	Rollover counters have exceeded limit.	Clear all totalizers.
Err: Rollover Status	Totalizer rollover has occurred.	Reload totalizer then clear all totalizers.
Err: Simulation	I/O simulator is enabled.	Disable simulator in I/O menu.

Appendix: Detector Specifications

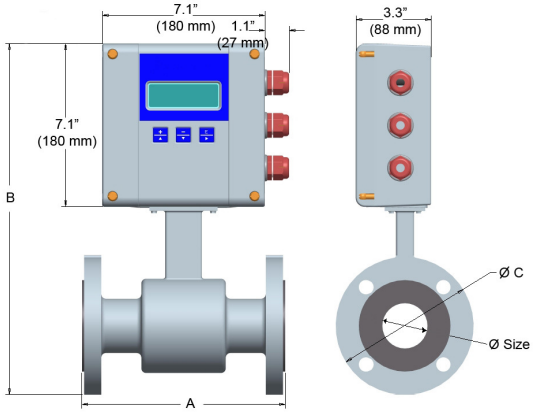

Meter with M-2000 amplifier

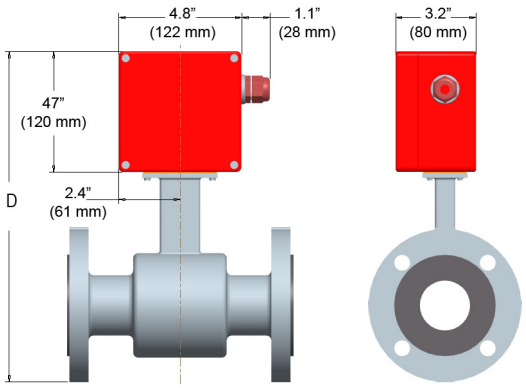

Meter with junction box for remote M-2000 amplifier

Size		A		B		C		D		Est. Weight with M-2000		Flow Range			
												LPM		GPM	
inch	mm	inch	mm	inch	mm	inch	mm	inch	mm	lbs	kg	min	max	min	max
1/4	6	6.7	170	14.0	356	3.5	89	11.4	288	10	4.5	0.063	20	0.02	5
5/16	8	6.7	170	14.0	356	3.5	89	11.4	288	10	4.5	0.114	34	0.03	9
3/8	10	6.7	170	14.0	356	3.5	89	11.4	288	10	4.5	0.177	53	0.05	14
1/2	15	6.7	170	14.0	356	3.5	89	11.4	288	10	4.5	0.416	125	0.11	33
3/4	20	6.7	170	14.2	361	3.9	99	11.5	293	13	5.5	0.75	225	0.2	59
1	25	8.9	225	14.4	366	4.3	108	11.7	298	18	8.0	1.20	350	0.3	93
1 1/4	32	8.9	225	15.2	386	4.6	117	12.5	318	20	9.0	2.00	575	0.5	152
1 1/2	40	8.9	225	15.4	390	5.0	127	12.7	322	21	9.5	3.00	900	0.8	239
2	50	8.9	225	15.9	403	6.0	152	13.2	335	26	11.5	4.70	1400	1	373
2 1/2	65	11.0	280	17.1	434	7.0	178	14.4	366	52	23.5	8	2400	2	631
3	80	11.0	280	17.3	440	7.5	191	14.7	372	54	24.5	12	3600	3	956
4	100	11.0	280	18.4	466	9.0	229	15.7	398	56	25.5	19	5600	5	1493
5	125	15.8	400	19.6	498	10.0	254	16.9	430	58	26.0	30	8800	8	2334
6	150	15.8	400	20.6	524	11.0	279	17.9	456	60	27.0	40	12700	11	3361
8	200	15.8	400	22.5	572	13.5	343	20.4	518	86	39.0	75	22600	20	5975
10	250	19.7	500	26.8	681	16.0	406	24.1	613	178	81.0	120	35300	30	9336
12	300	19.7	500	28.9	734	19.0	483	26.2	666	207	94.0	170	50800	45	13444
14	350	19.7	500	30.8	782	21.0	533	28.2	716	258	117	230	69200	60	18299
16	400	23.6	590	33.7	856	23.5	597	31.0	788	306	139	300	90400	80	23901
18	450	23.6	590	35.0	890	25.0	635	32.4	822	400	181	380	114000	100	30250
20	500	23.6	590	38.2	969	27.5	699	35.5	901	493	224	470	140000	125	37346
22	550	23.6	590	39.6	1005	29.5	749	36.9	937	523	237	570	170000	150	45188
24	600	23.6	590	42.2	1071	32.0	813	39.5	1003	552	251	680	200000	180	53778
28	700	23.6	590	46.2	1173	36.5	927	44.0	1118	648	294	920	275000	240	73100
30	750	31.5	800	48.3	1228	39.0	984	45.7	1161	702	319	1060	315000	280	84000
32	800	31.5	800	52.2	1325	41.4	1015	49.5	1257	768	349	1200	361000	320	95600
36	900	31.5	800	55.3	1405	46.0	1168	54.1	1374	848	385	1500	457000	400	121000
40	1000	31.5	800	60.0	1525	50.2	1230	57.4	1457	922	419	1900	565000	500	149300
42	1050	36.0	914	66.0	1675	53.0	1346	63.4	1610	1198	499	2100	620000	550	164600
48	1200	39.4	1000	69.9	1775	59.4	1455	67.2	1707	1208	549	2700	814000	720	215100
54	1400	39.4	1000	78.5	1995	68.4	1675	75.9	1927	1362	619	3700	1100000	980	292700

Flow Range: 0.1 - 39.4 fps (0.03-12 m/s)
Sizes: 1/4 inch to 54 inches (6 mm to 1400 mm)
Min. Conductivity: ≥ 5 micromhos/cm
Accuracy:
± 0.25 percent of rate for velocities greater than 1.64 ft/s (0.50 m/s)
± 0.004 ft/s (± 0.001 m/s) for velocities less than 1.64 ft/s (0.50 m/s)
Electrode Materials: Standard: Alloy C
Optional: 316 stainless steel, gold/platinum plated, tantalum, platinum/rhodium
Liner Material: PFA up to 3/8 inch, PTFE 1/2 inch to 24 inches, Soft and Hard Rubber from 1 to 54 inches, Halar® from 14 to 40 inches
NSF Listed: Models with hard rubber liner 4-inch size and up; PTFE liner - All sizes.

Fluid Temperature:
With Remote Amplifier:
PFA, PTFE & Halar 311°F (155°C)
Rubber 178°F, (80°C)
With Meter Mounted Amplifier:
PFA, PTFE & Halar 212°F (100°C)
Rubber 178°F, (80°C)
Pressure Limits:
Maximum allowable non-shock pressure and temperature ratings for steel pipe flanges, according to American National Standard ANSI B16.5. (Example: 150-pound flanges, rated 285 PSI at ambient temperature.) (Example: 300-pound flange rated 740 PSI at ambient temperature.)
Coil Power: Pulsed DC
Ambient Temperature: -4°F to 140°F (-20°C to 60°C)

Pipe Spool Material: 316 stainless steel
Meter Housing Material: Carbon steel welded
Flanges: Carbon steel - Standard (ANSI B16.5 Class 150 RF)
316 stainless steel - Optional
Meter Enclosure Classification: NEMA 4X (IP66)
Optional: Submersible NEMA 6P (remote amplifier required)
Junction Box Enclosure Protection:
(for remote amplifier option) Powder coated die-cast aluminum, NEMA 4 (IP65)
Cable Entries: 1/2-inch NPT Cord Grip
Optional Stainless Steel Grounding Rings:

Meter Size	Thickness (of one ring)
up through 10 inches	.135 inch
12 to 20 inches	.187 inch

Appendix: Amplifier Specifications

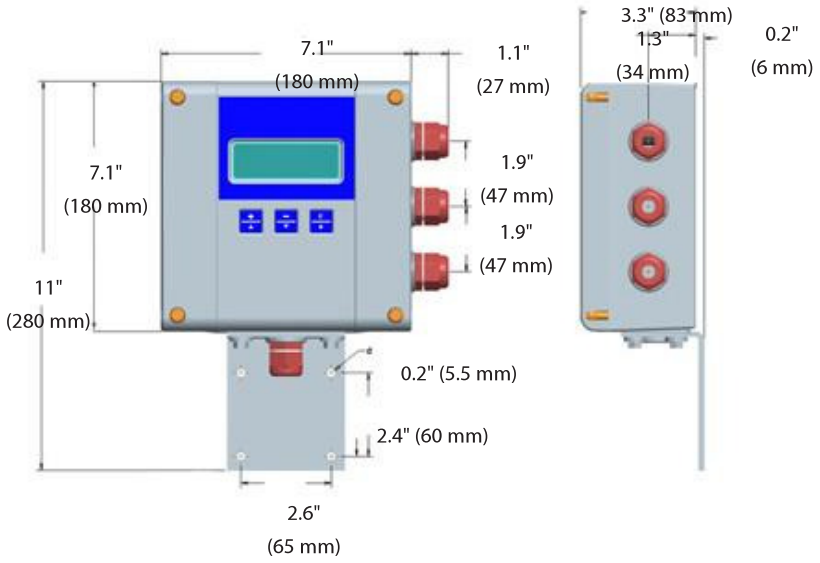

Power Supply:
AC supply (85-265 VAC)
Typical power: 20 VA or 15 Watts
Max. power: 26 VA or 20 Watts
Optional DC supply (10-36 VDC)
Typical power: 10 Watts
Max. power: 14 Watts

Accuracy: ± 0.25 percent of rate for velocities greater than 1.64 ft/s (0.50 m/s)
± 0.004 ft/s (± 0.001 m/s) for velocities less than 1.64 ft/s (0.50 m/s)

Repeatability: ± 0.1 percent

Flow Range: 0.10 to 39.4 ft/s (0.03 to 12 m/s)

Fluid Conductivity: Minimum 5.0 micromhos/cm

Flow Direction: Unidirectional or bidirectional two separate totalizers (programmable)

Totalization: Programmable/resettable
Unidirectional: T1, T2
Bidirectional: T+ (Fwd), T- (Rev), Tn (Net)

Minimum Fluid Conductivity: 5.0 micromhos/cm

Processing: 32-bit DSP

Analog Output: 4-20 mA, 0-20 mA, 0-10 mA, 2-10 mA (programmable and scalable)
Voltage sourced 24 VDC – isolated
Maximum loop resistance < 800 ohms

Digital Outputs: Four total, configurable
24 VDC sourcing active output (up to two),100 mA total, 50 mA each; sinking open collector output (up to four), 30 VDC Max, 100 mA each; AC solid-state relay (up to two), 48 VAC, 500 mA max.

Pulse Outputs: Scalable up to 10 kHz, passive open collector up to 10 kHz, active switched 24 VDC. Up to two outputs (forward and reverse). Pulse width programmable from 1-1,000 ms or 50 percent duty cycle.

Frequency Output: Scalable up to 10 kHz, open collector up to 1 kHz, solid-state relay

Misc Outputs: High/low flow alarm (0-100 percent of flow), error alarm, empty pipe alarm, flow direction, preset batch alarm, 24 VDC supply

Noise Dampening: Programmable 0-30 seconds.

Empty Pipe Detection: Field tunable for optimum performance based on specific application

Excitation Frequency: 1 Hz, 3.75 Hz, 7.5 Hz or 15 Hz (factory optimized to pipe diameter)

Digital Input: Max. 30 VDC (programmable – positive zero return, external totalizer reset or preset batch start)

Units of Measure: Ounces, pounds, liters, US gallon, imperial gallon, barrel, hectoliter, megagallon, cubic meters, cubic feet, acre feet

Galvanic Separation: 250 volts

Low-flow-cutoff: Programmable 0-10 percent of max. flow

LCD Display: 4 x 20 character display with backlight

Programming: Three-button, external manual or remotely

Housing: Cast aluminum, powder-coated paint

Housing Rating: NEMA 4X (IP66)

Mounting: Meter mount or remote wall mount (bracket supplied)

Cable Connection: 1/2-inch NPT Cord Grip (three)

Ambient Temperature: -4 to 140° F (-20 to 60° C)

Serial Communication: RS232 – Modbus RTU or remote display

Logging: Power loss totalization

Relative Humidity: Up to 90 percent non-condensing

Locations: Indoor and outdoor

M-Series is a registered trademark of Badger Meter, Inc.

Other trademarks appearing in this document are the property of their respective entities.

Copyright 2011, Badger Meter, Inc. All rights reserved.

Due to continuous research, product improvements and enhancements, Badger Meter reserves the right to change product or system specifications without notice, except to the extent an outstanding contractual obligation exists.

Badger Meter | P.O. Box 245036, Milwaukee, Wisconsin 53224-9536
800-876-3837 | infocentral@badgermeter.com | www.badgermeter.com

EPG Companies Inc.



EPG Companies Inc.



S42383

EPG Companies Inc.

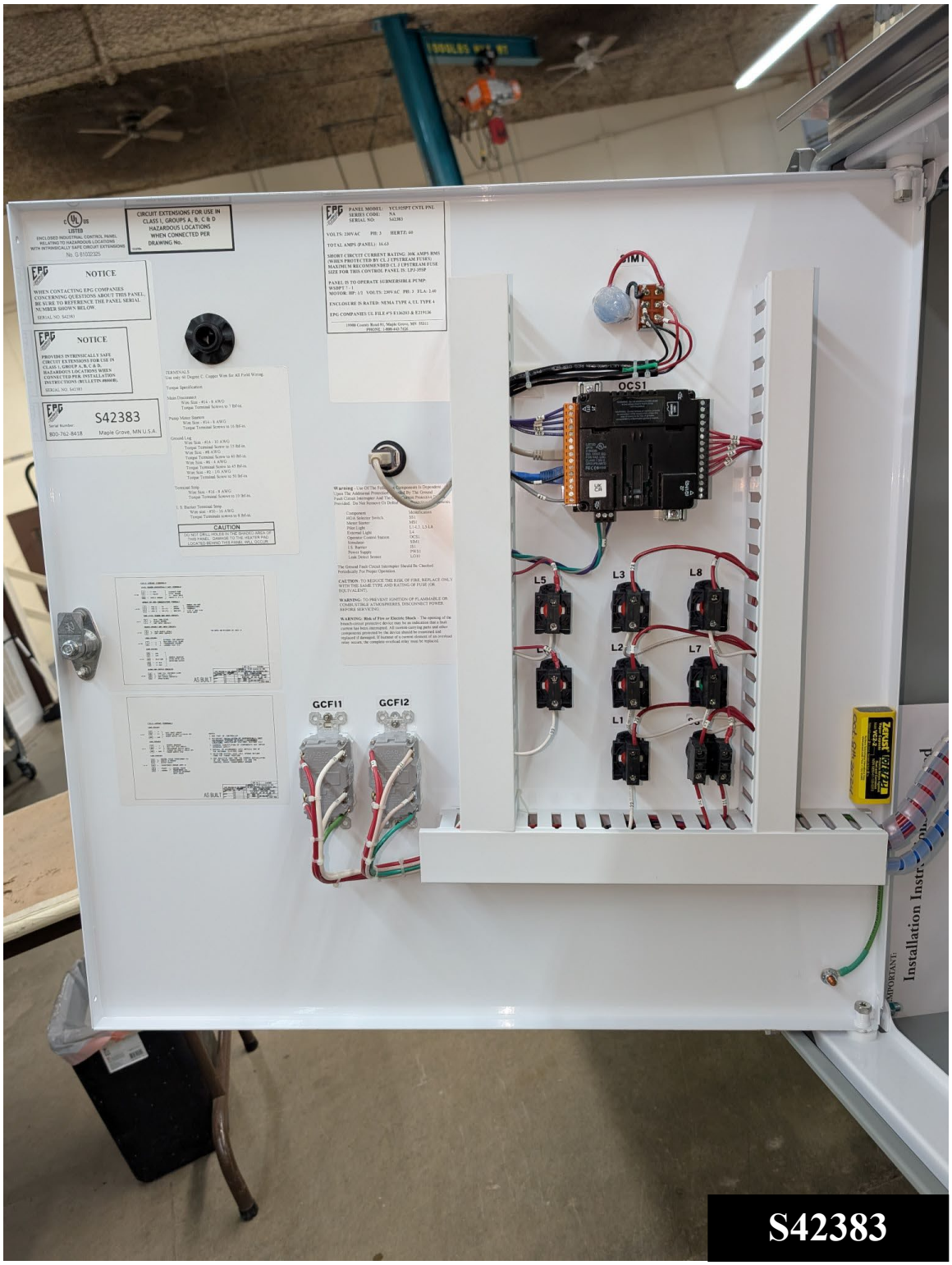

EPG Companies Inc.



S42383

EXTENDED LIMITED WARRANTY

This agreement shall be deemed to have been entered into in the State of Minnesota, and shall be construed in accordance with the laws of the State of Minnesota, including Minnesota's enactment of the Uniform Commercial Code. Buyer hereby stipulates and agrees that Hennepin County, Minnesota shall be the proper jurisdiction for adjudicating all claims and controversies arising from this agreement.

Products manufactured by EPG Companies Inc. are warranted for a period of 36 months from date of manufacture to be free from defects of materials and workmanship. It is expressly agreed that the exclusive remedy under this warranty is limited solely to the repair or replacement, at the sole discretion of EPG, of the part that failed. The cost of labor for any field repairs is not covered by this warranty. EPG Companies will not be liable for any damage or wear due to abnormal conditions or improper installation.

To qualify for an Extended 36 Month Limited Warranty, the following conditions must be met.

A. Pumps, controls and accessories must be purchased as a package.
B. Form 200 must be completed by the installer and on file at EPG prior to warranty request.

Products not manufactured by EPG Companies Inc. are covered by the original manufacturer's warranty, which EPG Companies passes through to the purchaser. Warranty determination will be made by the actual manufacturer.

To have a defective part repaired or replaced, you must return the defective product to EPG Companies. Please call (800) 762-8418 or (763) 424-2613 to obtain a RMA number. Send defective product (freight prepaid) with RMA #, description of installation, installation data and failure date to EPG Companies Inc., 19900 County Rd. 81, Maple Grove, MN 55311.

EPG Companies will not be held liable for any incidental or consequential damages, losses or expenses incurred from installation, use or any other reason. THERE ARE NO OTHER WARRANTIES, EXPRESSED OR IMPLIED, INCLUDING IMPLIED WARRANTIES OF EITHER FITNESS FOR A PARTICULAR PURPOSE OR OF MERCHANTABILITY, WHICH EXTEND BEYOND THOSE SPECIFICALLY LISTED HERE.

If equipment is to be stored for a period greater than six months, proper storage precautions must be taken if the warranty is to be maintained. Please contact EPG Companies for specific requirements regarding product storage.

To qualify for the delayed installation warranty you must contact EPG Companies Inc., at (800) 762-8418 or (763) 424-2613 within 60 days of purchase.

 © 2016 EPG Companies Inc.

Project: City of Ames Ash Pond Closure
SCS Project #: 27219356.02

Section: 33 12 00
Title: Submittal #S12B – Pumps

Submittal Review

- [X] Conforms as submitted
- [ ] Conforms as noted – Resubmittal is:
  - [ ] Not required
  - [ ] Required
  - [ ] Noted portions only
  - [ ] For record only
- [ ] Does not conform
- [ ] Not required by contract documents
- [ ] For information only

Corrections or comments made on submittals during this review do not relieve the contractor from compliance with requirements of the drawings and specifications. This check is only for review of general conformance with the design concept of the project and general compliance with the information given in the contract documents. The contractor is responsible for; confirming and correlating all quantities and dimensions; selecting fabrication processes and techniques of construction; coordinating contractor's work with that of all other trades; and performing contractor's work in a safe and satisfactory manner.

Comments:

Reviewed By: Matt Kuhlenengel	Date: 6/21/2024
SCS QC Review By: Mark Huber	Date: 6/24/2024

G:\Project\27219356.02\Data and Calculations\Submittals\S12 - Pumps\SCS Review 12-Pumps_240621.docx

SHOP DRAWING TRANSMITTAL

DATE: 6/19/2024

Project: Ames Ash Pond Closure & RDF Ash Pond Construction

Specification Section Number: 33 12 00 Contact Water Pumping System

Transmittal Number: 12B

1st Submittal _____ or Resubmital ___B____

Contract Item	Description of Material	Manufacturer	Drawing or Data No.	Action Taken
12	Pumps and components	Multiple		

As stated in the Contract Documents, the undersigned CONTRACTOR's submission of these Shop Drawings or samples shall constitute a representative to the OWNER and the ENGINEER that the CONTRACTOR has either determined and verified all quantities, dimensions, field construction criteria, materials, catalogue numbers and similar data or he assumes full responsibility for doing so, and that he has reviewed and coordinated each Shop Drawing or sample with the requirements of the work and the Contract Documents and he represents to the OWNER and the ENGINEER that item(s) described by these Shop Drawings do comply with the requirements of the Contract Documents. The undersigned Contractor certifies that the equipment included in this submittal complies with the latest requirements of the Occupational Health and Safety Act of 1970 including any standards or regulations established by the U.S. Secretary of Labor in administration of said act, and the Iowa Occupational Safety and Health Statutes.

6/7/2024

Supplier/Subcontractor:
EPG - Supplier

(Autorized Signature of Contractor) **(Date)**

JB Holland Construction, Inc.

2191 State Hwy 52, Decorah, IA 52101

FOR ENGINEER'S USE

n as designated above in accordance with the following legend:

A- No Exception Taken
B- Make Corrections Noted & Resubmit
C- Revise & Resubmit
D- Rejected
E- Submit Specified Item

BY: _____

DATE: _____

EPG Companies Inc.

SUBMITTAL

FOR

City of Ames
Ash Pond

EPG Job# S42383

EPG Companies Inc.

Submittal Index

City of Ames Ash Pond

EPG Job# S42383

Bulletin	1055	List of Equipment
Drawing	09948-0000	Series 7 SurePump™
Drawing	09948-0010	Series 7 Size 5 Sump Drainer
Bulletin	0335h	EPG SurePump™ Wheeled Sump Drainer
Bulletin	0480g	Materials of Construction
Bulletin	0123a	Engineer's Specification EPG LevelMaster™ LT Submersible Level Sensor
Bulletin	7620	EPG Series YCL925PT PumpMaster™ Controller
Form	117	Attachment to 7620
Drawing	13367-0250	Panel Schematic
Drawing	09650-0000	BJBGE-100B Gas Effect Breakout Junction Box for Level Sensor
Drawing	03626-0500	BJBP500 Breakout Junction Box for Motor Lead
Bulletin	0285e	Model NW Stainless Steel Discharge Adapter for Leachate, Monitoring, and Remediation Piping Applications
Bulletin	0291d	Installation Instructions – NW Disconnect for Leachate, Monitoring, and Remediation Pumping Applications
Bulletin	3282	2" Combination Air Release Valve Model AVR200
Information	2 Pages	Badger M2000 Technical Brief
Information	3 Pages	Tsurumi 50PUPUA2.4S SP with floats
Bulletin	2236	Extended Limited Warranty
Form	127a	Submittal Acceptance Form

© EPG Companies Inc. 2023

EPG Companies Inc.

List of Equipment

City of Ames Ash Pond

EPG Job# S42383

1 YCL925PT
EPG PumpMaster Control Panel, UL listed, 460V, 3Ø, NEMA 4 enclosure, to operate a 1/2 HP submersible pump motor with Operator Control Station (OCS) and simulator, elapsed time meter, and cycle counter, flow and flow total a Pump Run LED panel mounted light the following alarms have panel mounted red LED lights: Overload, High sump level, high level, low level sump, leak detect, alarm reset, tank full alarm with passalong, remote pump disable. Includes Blue Top Mounted high-high alarm strobe, 20 Amp remote GFCI outlet, heat trac circuit, 5VA transformer, Lockable Enclosure is Rated NEMA 4

1 WPZ00701005C1044OX
WSDPT 7-1, 4" wheeled sump drainer, 0.5 HP, 230 V, 3PH, 304SS
EPG WSDPT 7-1 Sure Pump patented, 4" Wheeled, 304 SS stainless Steel Sump Drainer with 1/2 HP. 230 VAC, 3 phase submersible motor. Includes: 50' of 14 AWG Jacketed motor lead, LT05X50P level Transducer with 50' of jacketed cable and 50' of 1/4" stainless steel suspension cable with SS clamps, drilled check valve, includes a 1/2" FNMPT to 2" MNPT Stainless steel reducer.

1 BJBGE-100B
Gas Effect Breakout Junction Box, rated leak tight at 100" of water column (positive or negative). Includes SureSeal connectors, 3/4" & 1" Myers hub, transducer cable clamp, desiccant dryer, bellows, enclosure is NEMA 4 powder coated steel.

1 BJBP500
EPG Breakout Box. NEMA 4X non-metallic enclosure for 1 ea. motor lead, with SureSeal connectors.

1 MAGM20002 DB
Badger 2" Mag Meter, Model M-2000, Flanged ends, with Modbus Daughter Board, 2" CS Body 150# Flanged with: PTFE Liner, Alloy C Electrodes, 316SS Grounding Rings, Remote Amplifier, NEMA 6P/IP67 Submersible, and 30' Cable.

1 ST-LO10
Optical Leak Detection Switch, Teflon body with 25' lead.

© EPG Companies Inc. 2023

1	NW2SS EPG Discharge Adapter, 2", cast 316SS disconnect.
1	AVR200 Air Release Valve, 2" FNPT, combination air and vacuum.
1	50PUA2.24S Pump, Tsurumi PU Series, 1/2 HP Tsurumi stainless steel sump pump with 1/2 HP, 115/230 VAC, 1 phase motor. Includes 32' of motor lead, 2" discharge, and (2) floats.

 © EPG Companies Inc. 2023

Series 7 SurePump ™

Flow Range 20-50 GPM

60 Hz

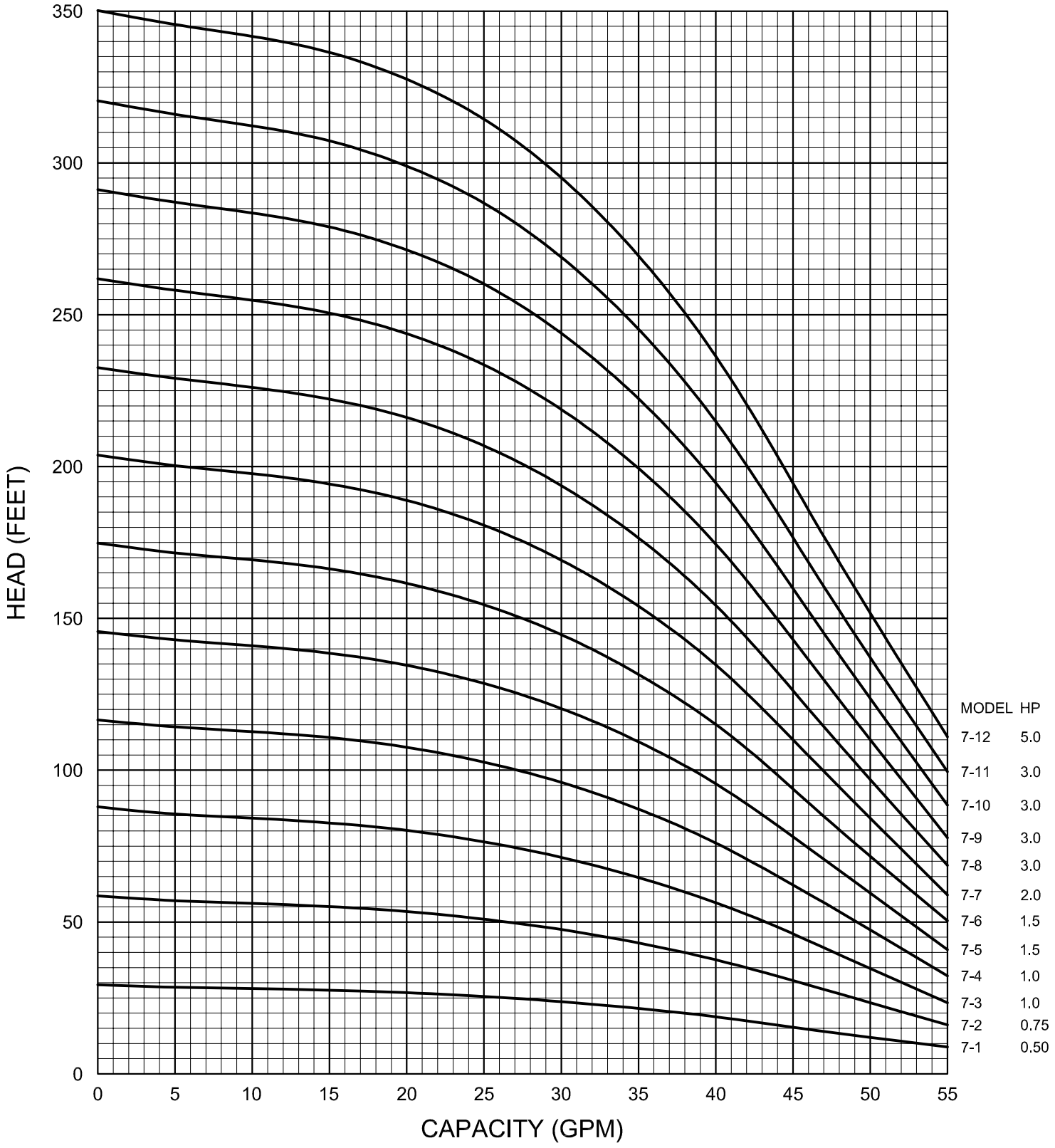

SPECIFICATIONS SUBJECT TO CHANGE WITHOUT NOTICE

SERIES 7 SIZE 4 SUMP DRAINER

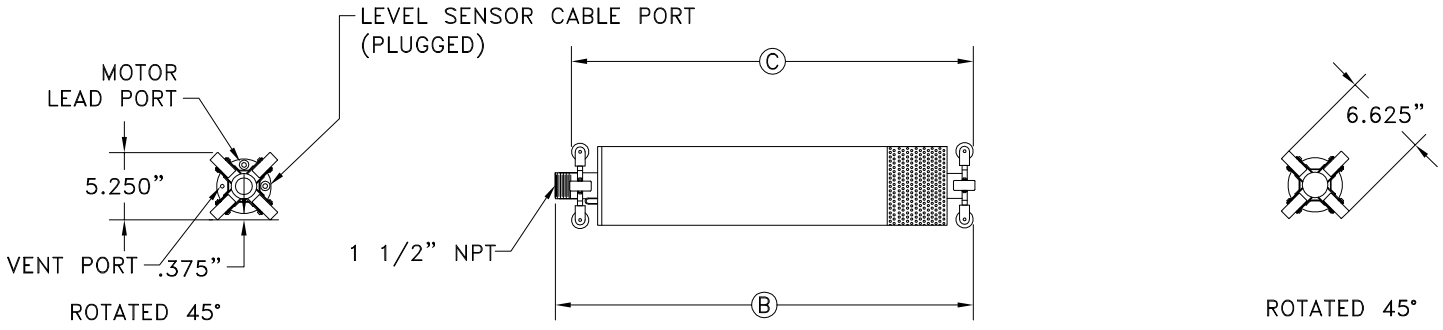

WSD

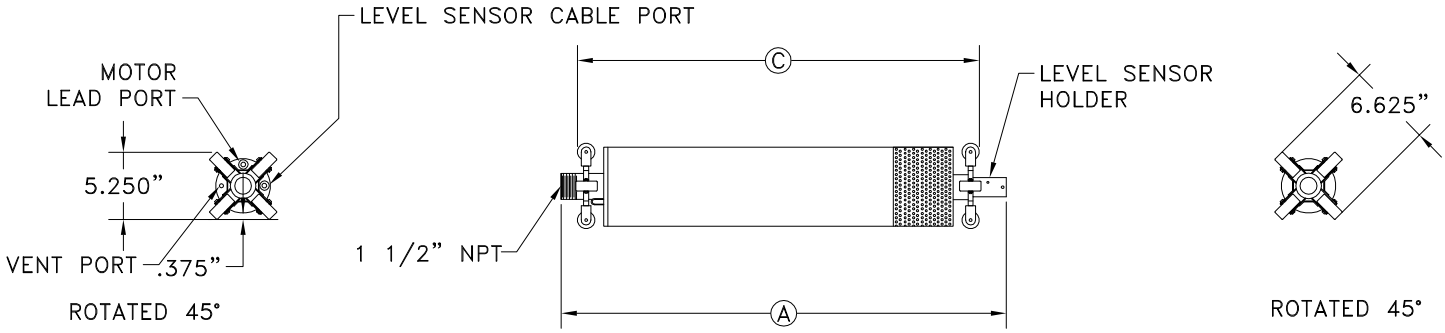

WSDPT

MODEL	HP	PHASE	A	B	C	*APPROX. SHIPPING WEIGHT	
						WSD	WSDPT
7-1	0.50	1	32.66	31.54	30.79	62.79	67.79
7-1	0.50	3	32.66	31.54	30.79	62.79	67.79
7-2	0.75	1	35.76	34.64	33.89	68.95	68.95
7-2	0.75	3	35.76	34.64	33.89	68.95	68.95
7-3	1.00	1	38.82	37.70	36.95	75.08	80.08
7-3	1.00	3	38.82	37.70	36.95	75.08	80.08
7-4	1.00	1	40.79	39.67	38.92	77.36	82.36
7-4	1.00	3	40.79	39.67	38.92	77.36	82.36
7-5	1.50	1	44.64	43.52	42.77	86.09	91.09
7-5	1.50	3	42.77	41.65	40.90	79.64	84.64
7-6	1.50	1	46.60	45.48	44.73	92.53	97.53
7-6	1.50	3	44.70	43.58	42.83	88.37	93.37

MODEL	HP	PHASE	A	B	C	*APPROX. SHIPPING WEIGHT	
						WSD	WSDPT
7-7	2.00	1	50.06	48.94	48.19	94.81	99.81
7-7	2.00	3	48.56	47.44	46.69	90.65	95.65
7-8	3.00	1	60.13	59.01	58.23	126.69	131.69
7-8	3.00	3	57.13	56.01	55.23	113.36	118.36
7-9	3.00	1	62.10	60.98	60.23	128.97	133.97
7-9	3.00	3	59.10	57.98	57.23	115.64	120.64
7-10	3.00	1	64.07	62.95	62.20	150.91	155.91
7-10	3.00	3	61.07	59.95	59.20	131.25	136.25
7-11	3.00	1	66.04	64.92	64.17	153.19	158.19
7-11	3.00	3	63.04	61.92	61.17	133.53	138.53
7-12	5.00	1	74.01	72.89	72.14	155.47	160.47
7-12	5.00	3	68.01	66.89	66.14	135.81	140.81

NOTE: ALL DIMENSIONS ARE IN INCHES.

*SHIPPING WEIGHT INCLUDES
WSD: CRATE, 50' OF 14-4 MOTOR LEAD, 50' OF 1/8" SS CABLE.
WSDPT: CRATE, 50' OF 14-4 MOTOR LEAD, 50' OF 1/8" SS CABLE, LEVEL SENSOR AND CABLE.

ENGINEER'S SPECIFICATION

EPG WSDPT SurePump™ Wheeled Sump Drainer

for side slope riser installations with built-in level sensor & drilled check valve

Furnish _1_ centrifugal submersible EPG WSDPT SurePump Wheeled Sump Drainer(s) (U.S. patented), Model WSDPT _7_ - _1_ with _1_ impeller stages. Each unit shall be suitable for side slope riser installation. Each unit shall be equipped with a _1/2_ HP, submersible electric motor for operation on _230_ Volts, _3_ phase, 60 Hertz service with _50_ feet of power cable. Each SurePump Wheeled Sump Drainer shall have a _1½_ inch MNPT threaded discharge nozzle and be capable of delivering _35_ GPM at _22_ feet of TDH. Each SurePump will be fitted with _50_ feet of stainless steel lifting cable of sufficient strength to permit removal of the unit.

DESIGN
Each SurePump Wheeled Sump Drainer shall be capable of pumping contaminated ground water for spill recovery, leachate, and condensate removal. A removable transmitter and mount (patent pending) shall be installed at the center bottom of the Sump Drainer for liquid level control. The stainless steel Sump Drainer shall permit the unit to "pump down" to within _8_ inches of the sump bottom without any loss of performance or damage to the pump. External “priming” shall not be required nor allowed. The Sump Drainer shall be sealed with fluid inlet only at bottom and be equipped with a vent valve to assist with the evacuation of air from the Sump Drainer.

MATERIALS
Major components shall be made of 304 stainless steel, seal rings are to be made of E-Glide™, and bearings are to be E-Glide. In addition, all fasteners shall be 304 stainless steel. Teflon or rubber bearings and seal rings are not allowed.

CHECK VALVE
Each unit shall include a built-in check valve with non-metallic seat, and housing and disc of 304 stainless steel with factory drilled drain back weep hole.

SHAFT
The shaft shall be of 304 stainless steel and rotate on E-Glide bearings that are fluid lubricated.

DIFFUSER CHAMBER
The diffuser chambers for each impeller shall be 304 stainless steel and fitted with E-Glide impeller seal rings.

IMPELLERS
The impeller(s) shall be closed and consist of 304 stainless steel.

SUMP DRAINER
The sump drainer shall be fabricated from 304 stainless steel with sealed top, sealed around motor lead and level sensor cable. Shall have fluid entrance only below the bottom of the motor to promote cooling. Shall have multiple wheels on each end. Shall have the level sensor mounted at the bottom central axis.

MOTOR
The motor shall be a submersible, hermetically sealed motor. The motor shall be designed for continuous duty, capable of sustaining up to _100_ starts per day. The motor shall be connected to the pump via a motor adaptor and coupling in 304 stainless steel. Single phase motors in ½ HP to 1 HP only shall have thermal protection in the motor windings to protect the windings from overload. The unit will restart automatically after the motor cools down. Larger horsepower single phase motors and three phase motors shall have thermal protection located in the control panel that is manually reset.

© 2024 EPG Companies Inc.
SurePump & E-Glide are Reg. TM of EPG Companies Inc.

MOTOR LEAD WIRE

The lead wire shall be no-splice with EPG's "CP" waterproof and chemically resistant jacket over 600 Volt insulation and be of the length specified. Wire shall be sized for amp load of the motor.

© 2024 EPG Companies Inc.
SurePump & E-Glide are Reg.
TM of EPG Companies Inc.

Materials of Construction

EPG SurePump™

	STANDARD
Check Valve Housing	304 Stainless Steel
Check Valve	304 Stainless Steel
Check Valve Seat	E-Glide™
Diffuser Chamber	304 Stainless Steel
Impeller Seal Ring	E-Glide™
Impeller	304 Stainless Steel
Motor Adapter	304 Stainless Steel
Inlet Screen	304 Stainless Steel
Pump Shaft	431 Stainless Steel
Coupling	329/420/431 Stainless Steel
Fasteners	304 Stainless Steel
Bearings	E-Glide™

FRANKLIN ELECTRIC MOTORS

	1/3 to 2 HORSEPOWER	3 to 60 HORSEPOWER
End Bell Castings	304 Stainless Steel over Iron	304 Stainless Steel over Iron
Stator Shell	301 Stainless Steel	301 Stainless Steel
Shaft Extension	303 Stainless Steel	303 Stainless steel
Fasteners	316 Stainless Steel	300 Stainless Steel
Seal Cover	Tefzel	Sintered Bronze
Shaft Seal	Viton	Viton, Carbon, Ceramic Face Seal
Diaphragm	Viton	Nitrile Rubber
Diaphragm Plate	304 Stainless Steel	304 Stainless Steel
Diaphragm Spring	302 Stainless Steel	302 Stainless Steel
Diaphragm Cover	316 Stainless Steel	304 Stainless Steel
Slinger	Viton	Nitrile Rubber
Lead Sleeve	316 Stainless Steel	316 Stainless Steel
Lead Jam Nut	316 Stainless Steel	N/A
Lead Jam Clamp	N/A	300 Stainless Steel
Lead Potting	Epoxy	Epoxy
Lead Bushing	Viton	Viton

© 2023 EPG Companies Inc.
SurePump is a Reg. TM of EPG Companies Inc.

ENGINEER'S SPECIFICATION

EPG LevelMaster™ LT Submersible Level Sensor

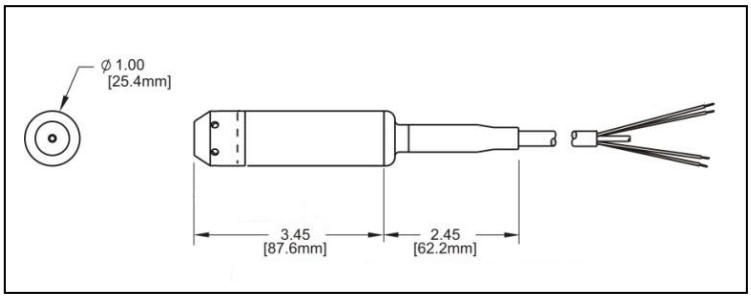

GENERAL FEATURES

* Application: The LevelMaster sensor is designed specifically to work with the EPG SurePump™, but its durability, accuracy and weight make it the logical choice for stand alone level applications. The chemical resistant jacketed cable with water block contains a vent tube for atmospheric pressure compensation.
* Ranges Available: 0-28" through 0-690' models are standard. Call EPG for other available ranges.
* Accuracy: The LevelMaster sensor has built-in temperature compensation as well as precise calibration giving an accuracy of ±0.25% at ambient temperature and a combined repeatability and hysteresis error of ±0.10%.
* Fully Submersible: The LevelMaster sensor is fully submersible in any liquid compatible with 316 stainless steel and the chemical resistant polyurethane cable jacket. It is designed for submergence at depths greater than 1.5X operating level without sustaining damage. Call EPG for more severe service.
* Superior Noise Immunity: Designed for heavy duty use in hostile environments, the LevelMaster sensor gives outstanding noise immunity. Unlike transducers, whose signals may be distorted by outside interference, the LevelMaster sensor utilizes a conditioned compensated 4-20 mA output to maximize signal strength and accuracy. The sensor also features a shielded lead to help prevent signal disruption from outside sources.

PERFORMANCE

* Depth Range: 0-28" thru 0-690' (0-1 PSI thru 0-300 PSI)
* Static Accuracy: ±0.25% FSO
* Thermal Error: 0.10% FSO/°C
* Resolution: +0.0001% FS

ENVIRONMENTAL

* Compensated temp range: 0° to 50°C
* Operating temp range: -20° to 60°C

© 2018 EPG Companies Inc.
LevelMaster & SurePump are
Reg. TM of EPG Companies Inc.

ELECTRICAL

* Excitation:	9 to 28 VDC, Red = (+) excitation, Black = (-) excitation
* Input Current:	20 mA maximum
* Output:	4-20 mA (2 wire)
* Zero offset (max):	4-20 mA, ±.25mA
* Output impedance:	<10 ohms
* Insulation resistance:	100 megohms at 50VDC
* Circuit protection:	Polarity, surge & shorted output
* Power supply rejection:	<±.05% FSO/VDC (mA output)
* Electrical termination:	2-22 AWG conductors in a shielded cable with sensor breather and polyurethane jacket

PHYSICAL

* Dimensions:	Nominal diameter of 1.0" X 5.9" length
* Weight:	7 oz. (not including cable)
* Cable:	Polyurethane jacketed shielded cable with polyethylene vent tube and Kevlar tension members (.05 lbs/ft)
* Wetted materials:	316 SS, Viton
* Mounting provision:	Suspended by cable

MODEL {Call EPG for other ranges available – specify length (---)}

PART #	DESCRIPTION	RANGE
LT05X---P	**Submersible Pressure Transmitter**	0-11'
LT07X---P	" " "	0-16'
LT10X---P	" " "	0-23'
LT15X---P	" " "	0-34'
LT20X---P	" " "	0-46'

OPTIONS

* Titanium Housing:	Used for highly corrosive environments (TI).
* Lightning Protection:	Protects against transient voltages and lightning associated surges up to 20,000 amperes (009).
* Temperature Sensor:	A sensor with 4-20 mA output for temperature (0-50ºC) is available (007). Excitation: 9-30 VDC, White = (+) excitation, Green = (-) excitation.
* Tefzel® Cable:	Recommended for use in highly corrosive environments. It offers additional resistance over standard polyurethane cable (TZ).
Part # Examples:	LT05X100TZ-009 (0-5 PSI, 100' of Tefzel cable, and lightning protection) LT10X250P-007 (0-10 PSI, 250' of polyurethane cable, and temperature sensor) LT05X100TZ/TI (0-5 PSI, 100' of Tefzel cable, and titanium housing)

© 2018 EPG Companies Inc.
LevelMaster & SurePump are
Reg. TM of EPG Companies Inc.

ENGINEER'S SPECIFICATION

EPG Series YCL925PT PumpMaster™ Controller

3Ø CONTROL PANEL

Furnish one EPG Companies Inc., UL listed 508A/698A, Series YCL925PT controller to operate a pump motor and auxiliary equipment in manual or automatic mode. The control panel enclosure shall be NEMA type 4.

The enclosure shall be equipped with a window in the outer door, an inner door, a stainless steel drip shield, and a tamper resistant latch. The NEMA 4 (standard) enclosure is finished with polyester urethane paint. The NEMA 4X (optional) enclosure can be either N/A stainless steel or N/A white powder coated stainless steel.

The control system will operate from a 460 Volt, 60 Hertz, three phase power supply. Pump control components will be sized to operate a pump motor of specified horsepower.

The control panel shall include the following as standard features:

* Main Disconnect Switch: The main disconnect switch shall be 60 Amp rated and will prevent opening of the control panel while the power is on, and includes 460 Volt, 4 Amp dual element fuses.
* "Hand-Off-Auto" Selector Switch: Allows manual or automatic operation of the pump motor. The selector switch shall be a heavy duty, oil tight, NEMA 4 rated switch mounted on the inner door. The hand position shall be momentary with a spring return.
* Motor Starter: The motor starter shall be sized to the pump motor horsepower, and shall be equipped with built in single phasing protection and ambient compensated, quick trip adjustable thermal overloads.
* Control Transformer: A transformer with fused primary and secondary shall isolate the control circuit from the power circuit and provide easier and safer field wiring of accessories. It shall lower incoming voltage to 120 Volts.
* Run Light: Indicates energization of motor circuit. It shall be heavy duty, oil tight, NEMA 4 rated and shall have an LED lamp with 100,000 hour life. The light shall be mounted on the inner door and will be green in color.
* Motor Overload Light: Indicatesmotor not running due to overload condition. It shall be heavy duty, oil tight, NEMA 4 rated and shall have LED lamp with 100,000 hour life. The light shall be mounted on the inner door and will be red in color.
* OCS as Level Control: The (Operator Control Station) shall be mounted on the inner door. The processor shall have a transflective touchscreen and four selection keys. It shall have the capacity to monitor and maintain liquid levels as well as output alarms. It shall also provide a high-high or low-low level alarm fail safe feature that shuts off the pump motor. The high-high or low-low alarm may indicate level sensor failure or a problem with the pump. The level control shall be accurate to within 0.1 inch.
* OCS as Cycle Counter and Elapsed Time Meter: Shall display the number of starts and elapsed run time of the pump motor.
* OCS as Flow Meter: Shall display the flow rate (gpm) and totalized flow rate.
* OCS Shall include the following: Micro SD memory card, Ethernet communication, USB port, RS232 port and RS485 port.
* Level Simulator: The level simulator shall be mounted on the inner door. The level simulator is a built-in test circuit designed to simulate a 4-20 mA load to assist in level meter setup and troubleshooting.
* Intrinsically Safe Barrier: The level sensor circuit shall be by protected by an intrinsically safe barrier.

© 2024 EPG Companies Inc.
PumpMaster is a Reg. TM of EPG Companies Inc.

* Heater with Adjustable Thermostat: A heater with adjustable thermostat shall promote even distribution of heat and elimination of hot spots and condensation. It shall also maintain the minimum temperature required for the operation of the OCS. The heater element shall be mounted in space between the sub-panel and the back of the enclosure and provide a minimum of 100 inches square of heating area.
* GFCI: Ground fault circuit shall protect level sensing circuit from ground fault.
* Surge Protector: Shall protect sensor circuits and indicating lights from power surges.
* Lightning Arrestor: Shall be grounded, metal-to-metal, to water strata. When properly grounded, the lightning arrestor will protect electrical equipment against lightning induced surges.
* Terminal Strip: A labeled and numbered terminal strip provides easy connection of external components.
* Corrosion Inhibitor Emitter: Inclusion of an industrial corrosion inhibitor emitter shall protect internal components of control panel from corrosion for up to one year and shall be replaceable.

SYSTEM LOGIC AND FUNCTION

The controller is designed to start and stop a pump using the OCS level control meter with a submersible pressure transmitter. The pump starts at the pump start level set point and continues to run until the liquid level decreases to the pump stop level set point as programmed in the OCS level control meter. If the liquid level rises to the high level alarm set point, a high level alarm will be annunciated. If the liquid level falls to the low level alarm set point, a low level alarm will be annunciated. If the liquid level rises to the high-high or falls to the low-low level fail-safe set point, the pump motor will shut off. The pressure transmitter level sensor shall have a range of 0 to 11 feet with a 4-20 mA output signal. The OCS also displays the level, flow rate, totalized flow, counts the number of pump starts and displays run time in hours.

© 2024 EPG Companies Inc.
PumpMaster is a Reg. TM of
EPG Companies Inc.

ATTACHMENT TO BULLETIN 7620

ENGINEER'S SPECIFICATION
EPG YCL925PT Controller
3Ø Control Panel

EPG Job# S42383

These controllers include the following optional features:

- Elapsed time meter
- Cycle counter
- Flow and flow total a pump run led panel mounted light
- The following alarms have panel mounted red led lights:
  - Overload
  - High sump level
  - High level
  - Low level sump
  - Leak detect
  - Alarm reset
  - Tank full alarm with passalong
  - Remote pump disable
- Includes Blue Top Mounted high-high alarm strobe
- 20 Amp remote GFCI outlet
- Heat trac circuit
- 5VA transformer
- Lockable Enclosure

MOTOR	HP	VOLTAGE	FLA	FUSE SIZE
LEACHATE PUMP	1/2	230	2.40	4A

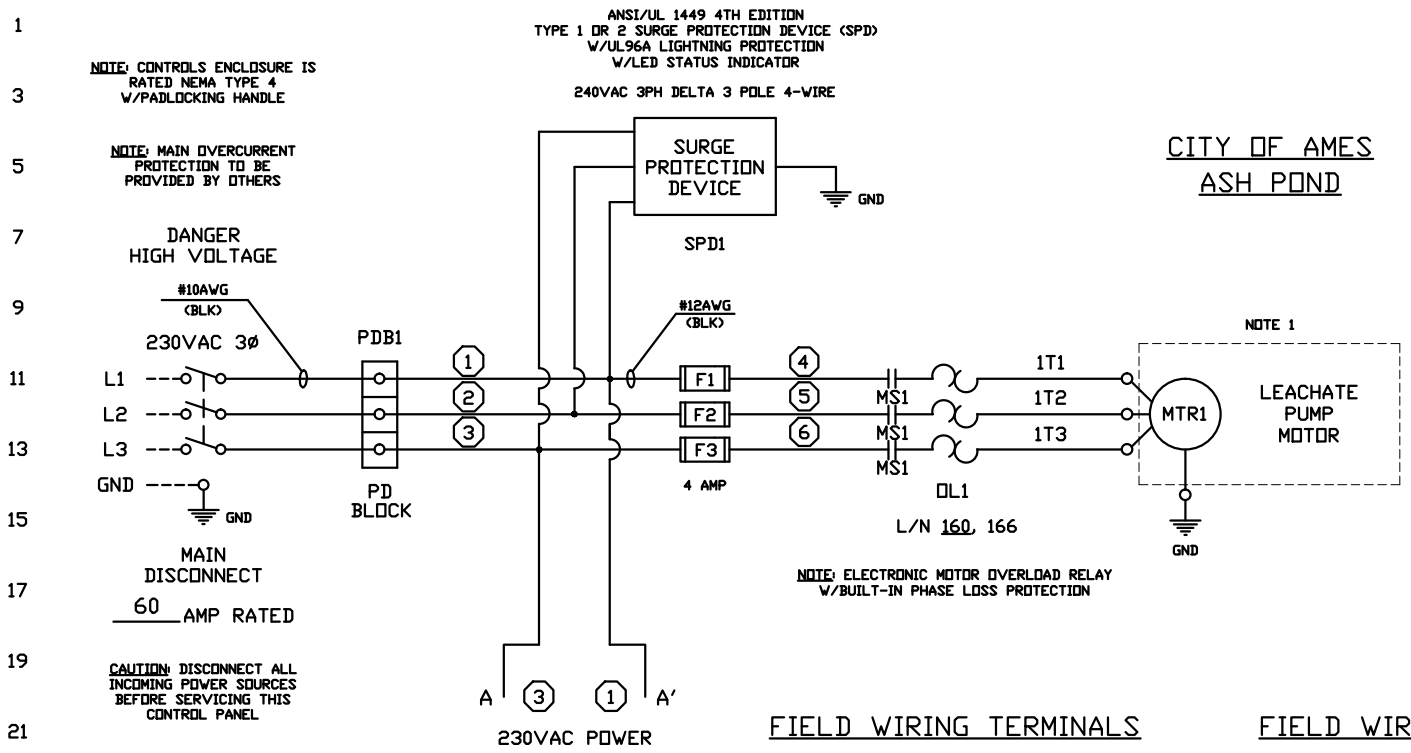

CITY OF AMES
ASH POND

FIELD WIRING TERMINALS

LINE (PANEL) TOTAL AMPS

L1, L2, L3 — 230VAC 3Ø 60Hz 16.63 AMPS

GND — GROUND

FIELD WIRING TERMINALS

LOAD (230VAC)

1T1, 1T2, 1T3 — LEACHATE PUMP MOTOR

GND

		RATINGS	
FUSE	TYPE	VOLTS	AMPS
F1-F3	LPJ-SP	600	4
F4-F5	LPJ-SP	600	25
F6	LPJ-SP	600	2
F7	LPJ-SP	600	3-1/2
F8	LPJ-SP	600	5
F9	LPJ-SP	600	20

FOR NOTES AND REVISIONS SEE SHEET 12

JOB No. S42383

* NOTICE * © EPG Companies Inc. 2024
THIS DRAWING IS THE PROPERTY OF EPG COMPANIES FOR REFERENCE ONLY.

TOLERANCES (EXCEPT AS NOTED)
DECIMAL ±
FRACTIONAL ±
ANGULAR ±

REVISIONS

NO.	DATE	BY
1		
2		
3		
4		
5		

EPG COMPANIES

YCL925PT CONTROL PANEL
230VAC 3Ø SH 1 OF 12

DESIGN	SCALE	MATERIAL
RCK		
DRAWN RCK	DATE 05-16-24	DRAWING NO. 13367-0250
CHK'D	APP'D	

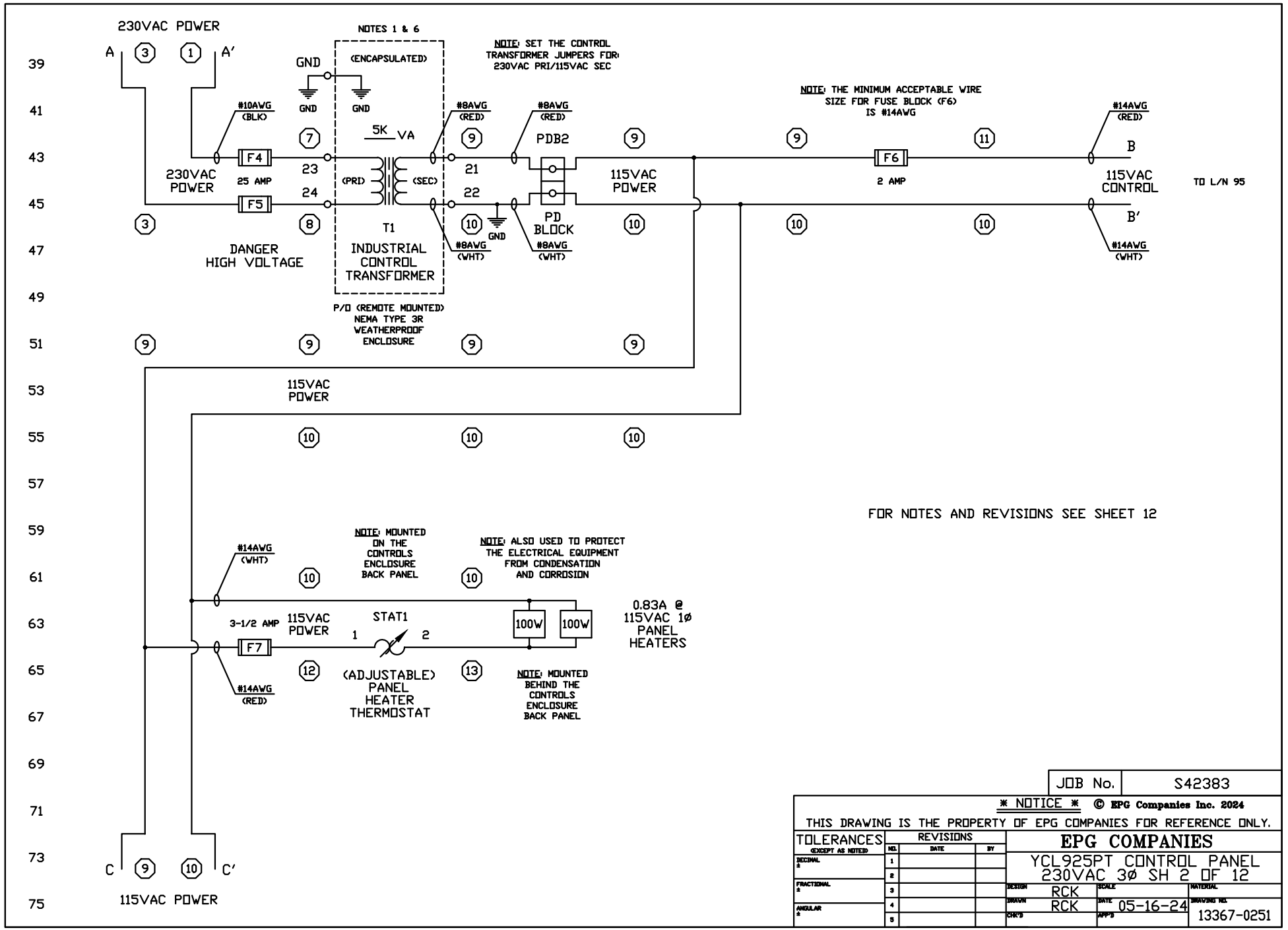

JOB No.	S42383

* NOTICE * © EPG Companies Inc. 2024
THIS DRAWING IS THE PROPERTY OF EPG COMPANIES FOR REFERENCE ONLY.

TOLERANCES (EXCEPT AS NOTED)	REVISIONS NO.	DATE	BY
DECIMAL ±	1		
FRACTIONAL ±	2		
ANGULAR ±	3		
	4		
	5		

EPG COMPANIES

YCL925PT CONTROL PANEL
230VAC 3ø SH 2 OF 12

DESIGN	SCALE	MATERIAL
RCK		
DRAWN: RCK	DATE: 05-16-24	DRAWING NO.: 13367-0251
CHK'D	APP'D	

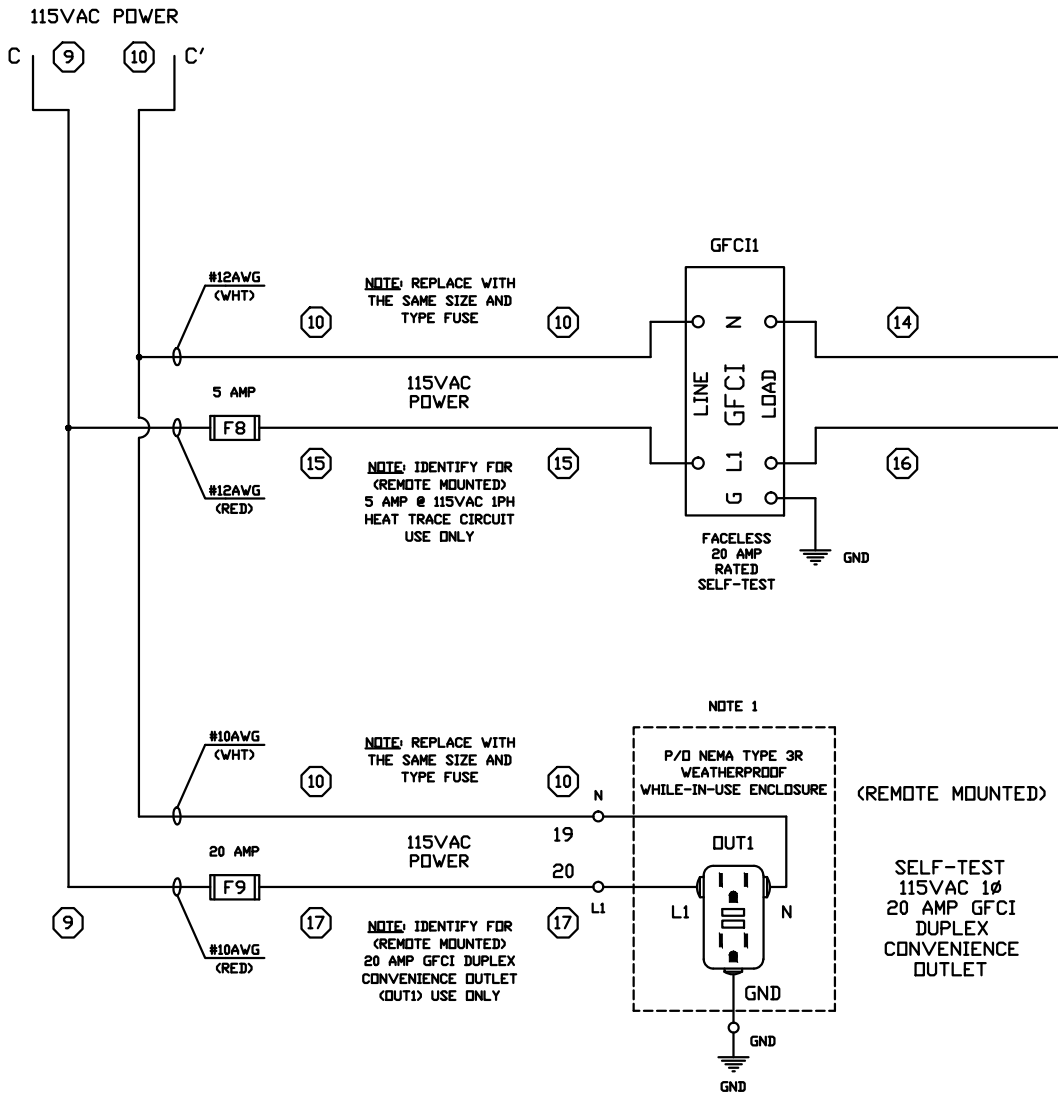

FOR NOTES AND REVISIONS SEE SHEET 12

JOB No.	S42383

* NOTICE * © EPG Companies Inc. 2024
THIS DRAWING IS THE PROPERTY OF EPG COMPANIES FOR REFERENCE ONLY.

TOLERANCES (EXCEPT AS NOTED)	REVISIONS			EPG COMPANIES		
DECIMAL ±	NO.	DATE	BY	YCL925PT CONTROL PANEL 230VAC 3ø SH 3 OF 12		
FRACTIONAL ±	1					
ANGULAR ±	2					
	3			DESIGN RCK	SCALE	MATERIAL
	4			DRAWN RCK	DATE 05-16-24	DRAWING NO. 13367-0252
	5			CHK'D	APP'D	

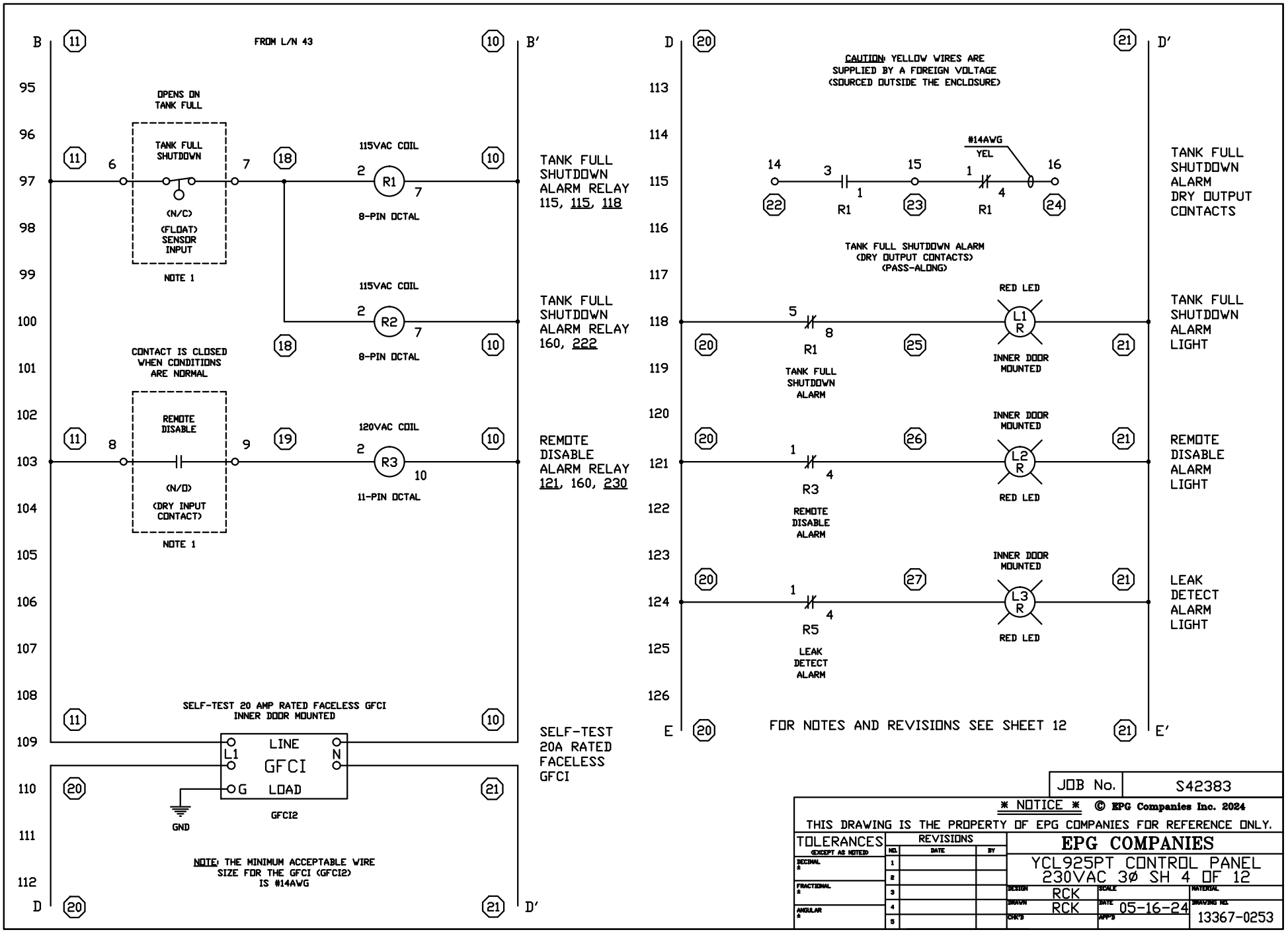

JOB No.	S42383

* NOTICE * © EPG Companies Inc. 2024

THIS DRAWING IS THE PROPERTY OF EPG COMPANIES FOR REFERENCE ONLY.

TOLERANCES (EXCEPT AS NOTED)	REVISIONS			EPG COMPANIES			
DECIMAL ±	NO.	DATE	BY	YCL925PT CONTROL PANEL 230VAC 3Ø SH 4 OF 12			
FRACTIONAL ±	1			DESIGN RCK	SCALE	MATERIAL	
ANGULAR ±	2			DRAWN RCK	DATE 05-16-24	DRAWING NO. 13367-0253	
	3			CHK'D	APP'D		
	4						
	5						

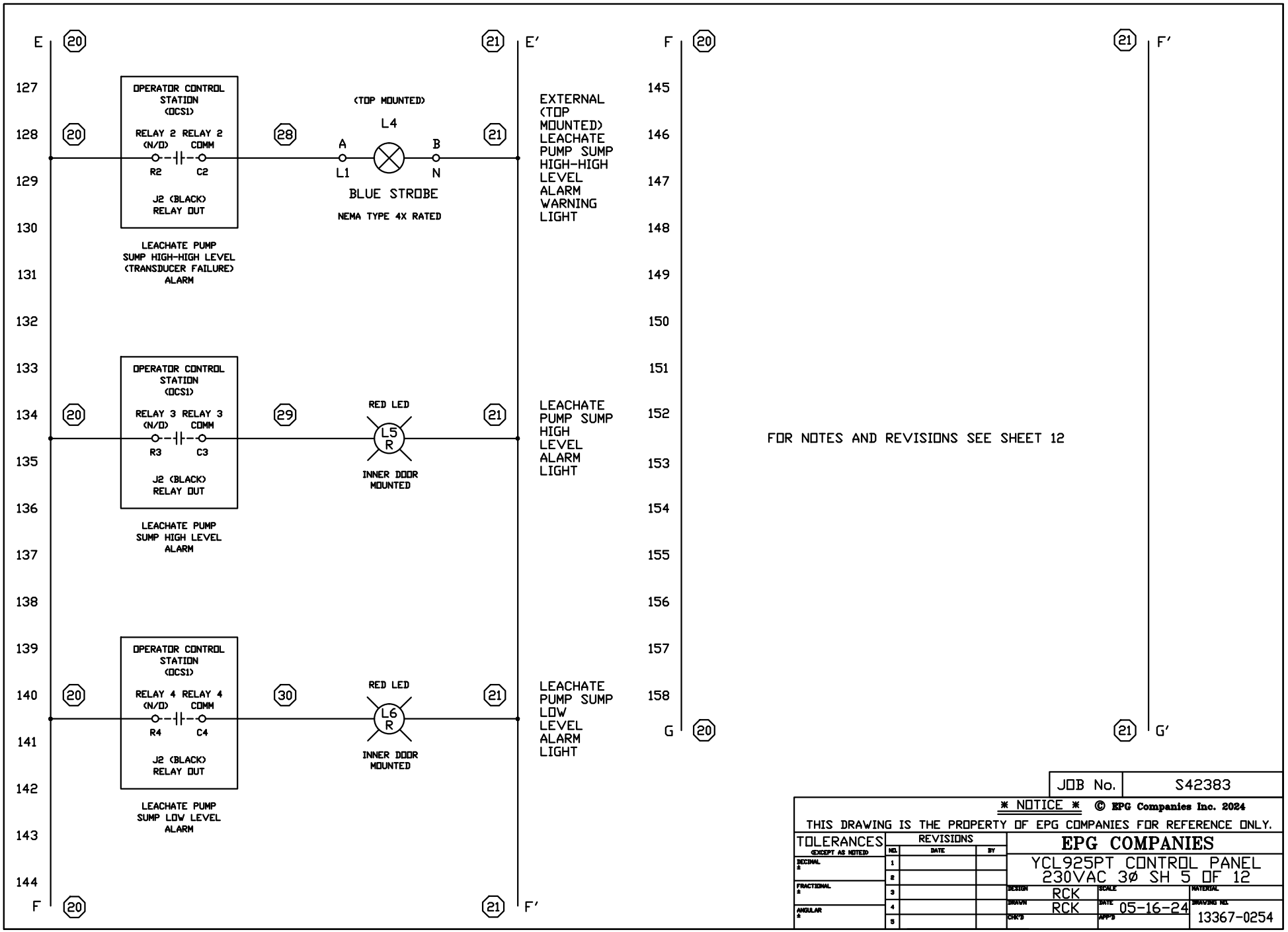

FOR NOTES AND REVISIONS SEE SHEET 12

JOB No.	S42383

* NOTICE * © EPG Companies Inc. 2024
THIS DRAWING IS THE PROPERTY OF EPG COMPANIES FOR REFERENCE ONLY.

TOLERANCES (EXCEPT AS NOTED)	REVISIONS NO.	DATE	BY
DECIMAL ±	1		
FRACTIONAL ±	2		
ANGULAR ±	3		
	4		
	5		

EPG COMPANIES

YCL925PT CONTROL PANEL
230VAC 3Ø SH 5 OF 12

DESIGN	SCALE	MATERIAL
RCK		
DRAWN RCK	DATE 05-16-24	DRAWING NO. 13367-0254
CHK'D	APP'D	

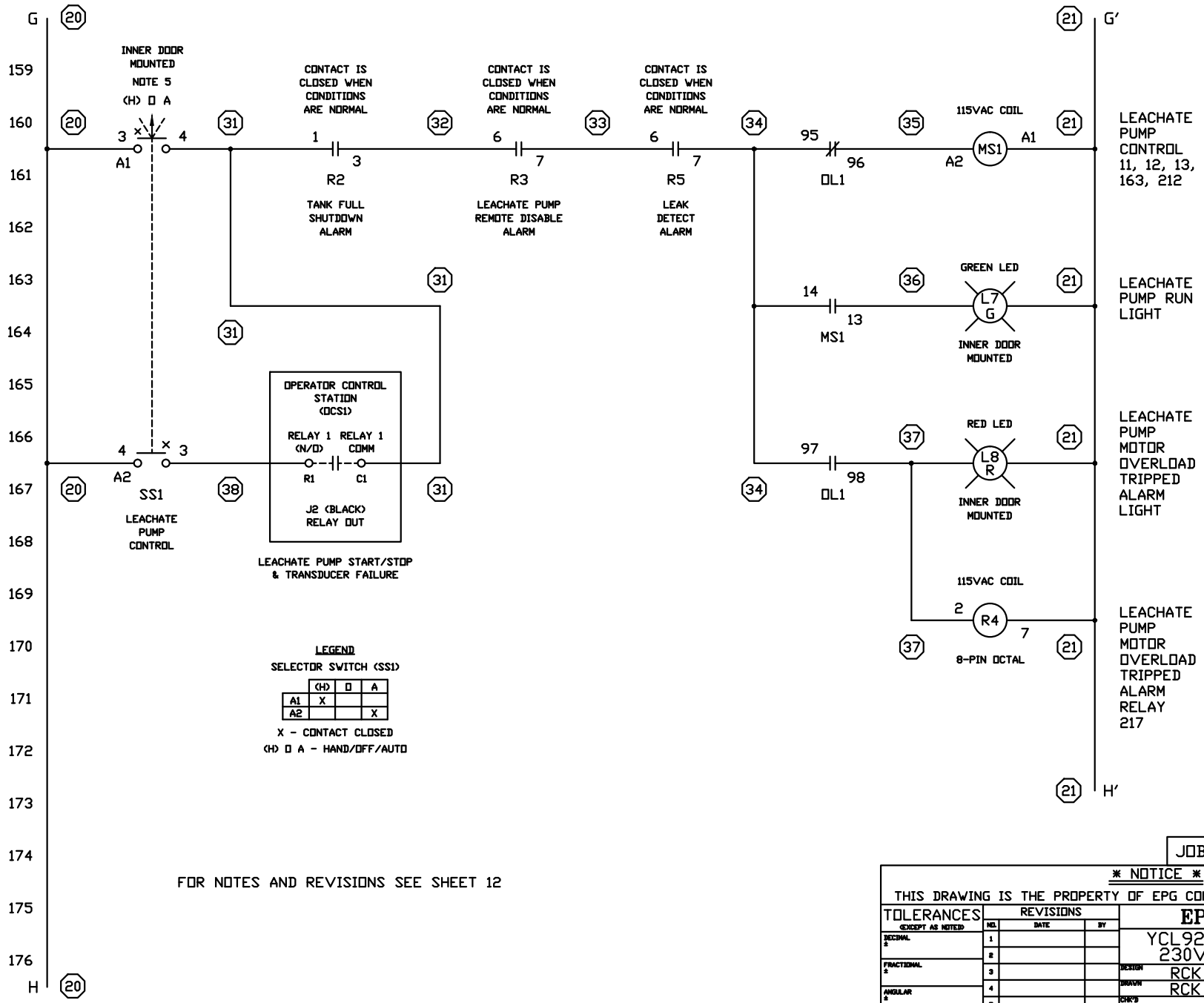

FOR NOTES AND REVISIONS SEE SHEET 12

JOB No.	S42383

* NOTICE * © EPG Companies Inc. 2024
THIS DRAWING IS THE PROPERTY OF EPG COMPANIES FOR REFERENCE ONLY.

TOLERANCES (EXCEPT AS NOTED)	REVISIONS NO.	DATE	BY
DECIMAL ±	1		
FRACTIONAL ±	2		
ANGULAR ±	3		
	4		
	5		

EPG COMPANIES

YCL925PT CONTROL PANEL
230VAC 3ø SH 6 OF 12

DESIGN	RCK	SCALE	MATERIAL
DRAWN	RCK	DATE 05-16-24	DRAWING NO. 13367-0255
CHK'D		APP'D	

H (20) — I (20)

177 178 179 180 181 182 183 184 185 186 187 188 189 190 191 192 193 194

NOTE: W/OPERATOR CONTROL STATION (OCS1)
(REMOTE MOUNTED) USB RECEPTACLE MOUNTED ON THE INNER DOOR
W/INTERCONNECTING CABLE & (BLANK) USB FLASH DRIVE
(USED FOR DATA LOGGING)

NOTE: INPUTS I11(H3) & I12(H4) ARE NOT USED

OPERATOR CONTROL STATION (OCS1)					
P/N OCS-004P-102 (I/O MAP)					
I/O	DESC	L/N	I/O	DESC	L/N
I1	LEACHATE PUMP RUN INPUT	212	A1	LEACH PUMP (4-20mA) LEVEL SENSOR INPUT	273
I2	LEACHATE PUMP MOTOR OL TRIP ALARM INPUT	217	A2	(SPARE)	
I3	TANK FULL SHUTDOWN ALARM INPUT	222	A3	(SPARE)	
I4	REMOTE DISABLE ALARM INPUT	230	A4	(SPARE)	
I5	LEAK DETECT ALARM INPUT	235	R1	LEACHATE PUMP START/STOP OUTPUT	166
I6	(SPARE)		R2	LEACHATE PUMP SUMP HI-HI LVL ALARM OUTPUT	128
I7	(SPARE)		R3	LEACHATE PUMP SUMP HI LVL ALARM OUTPUT	134
I8	(SPARE)		R4	LEACHATE PUMP SUMP LOW LVL ALARM OUTPUT	140
I9(H1)	(SPARE)		R5	(SPARE)	
I10(H2)	(SPARE)		R6	(SPARE)	

I - DIGITAL INPUT, H - HIGH SPEED, A - ANALOG INPUT, R - RELAY OUTPUT

H′ (21) — I′ (21)

J (39) — J′ (40)

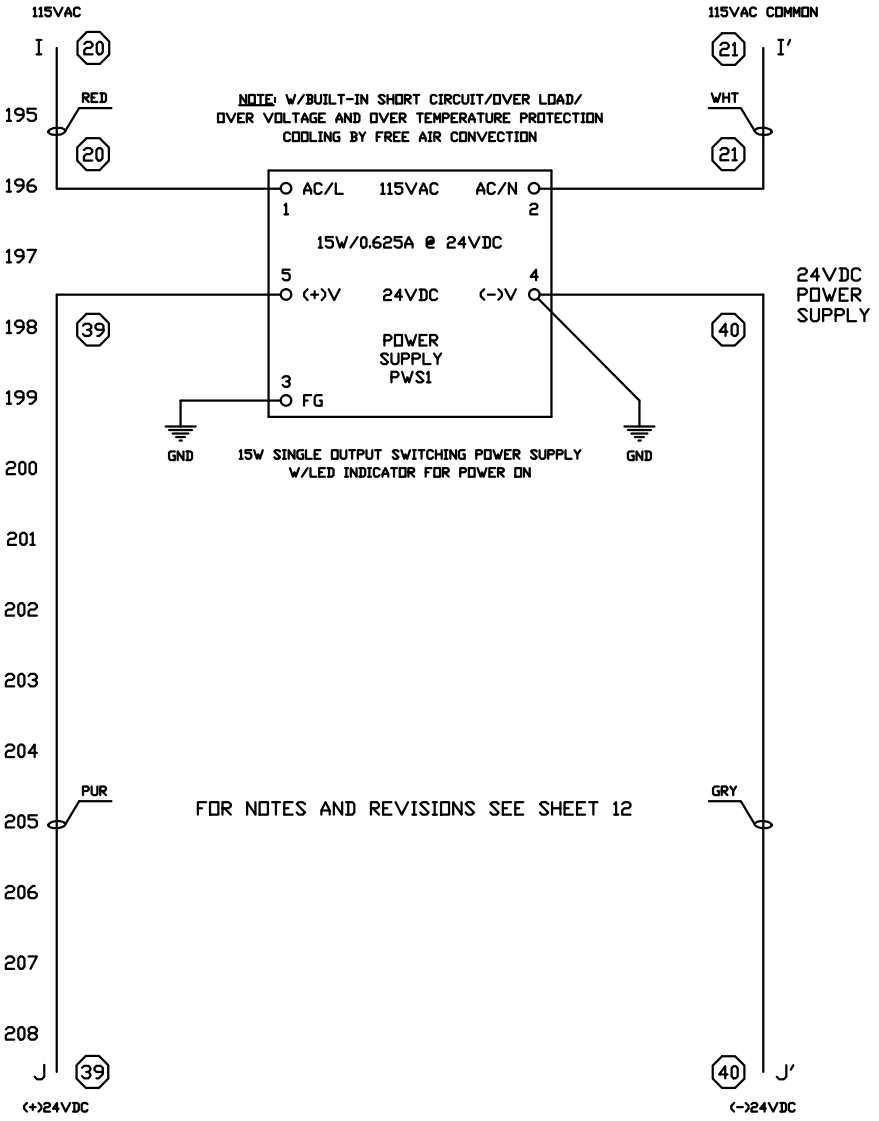

JOB No.	S42383

* NOTICE * © EPG Companies Inc. 2024
THIS DRAWING IS THE PROPERTY OF EPG COMPANIES FOR REFERENCE ONLY.

TOLERANCES (EXCEPT AS NOTED)
DECIMAL ±
FRACTIONAL ±
ANGULAR ±

REVISIONS			
NO.	DATE	BY
1		
2		
3		
4		
5		

EPG COMPANIES

YCL925PT CONTROL PANEL
230VAC 3Ø SH 7 OF 12

DESIGN	RCK	SCALE	MATERIAL
DRAWN	RCK	DATE 05-16-24	DRAWING NO. 13367-0256
CHK'D		APP'D	

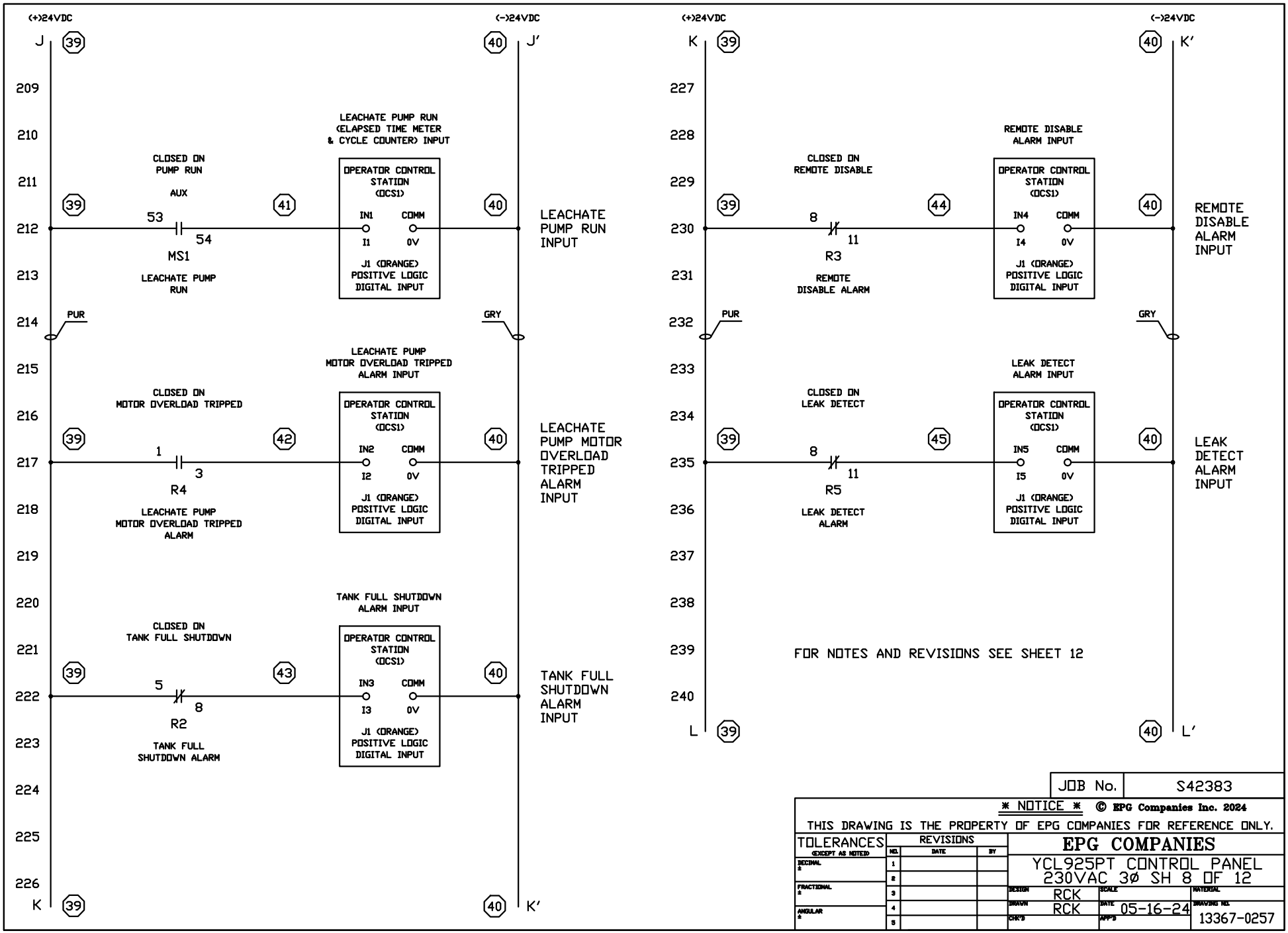

JOB No.	S42383

* NOTICE * © EPG Companies Inc. 2024

THIS DRAWING IS THE PROPERTY OF EPG COMPANIES FOR REFERENCE ONLY.

TOLERANCES (EXCEPT AS NOTED)
DECIMAL ±
FRACTIONAL ±
ANGULAR ±

REVISIONS			
NO.	DATE	BY
1		
2		
3		
4		
5		

EPG COMPANIES

YCL925PT CONTROL PANEL
230VAC 3Ø SH 8 OF 12

DESIGN	RCK	SCALE	MATERIAL
DRAWN	RCK	DATE 05-16-24	DRAWING NO. 13367-0257
CHK'D		APP'D	

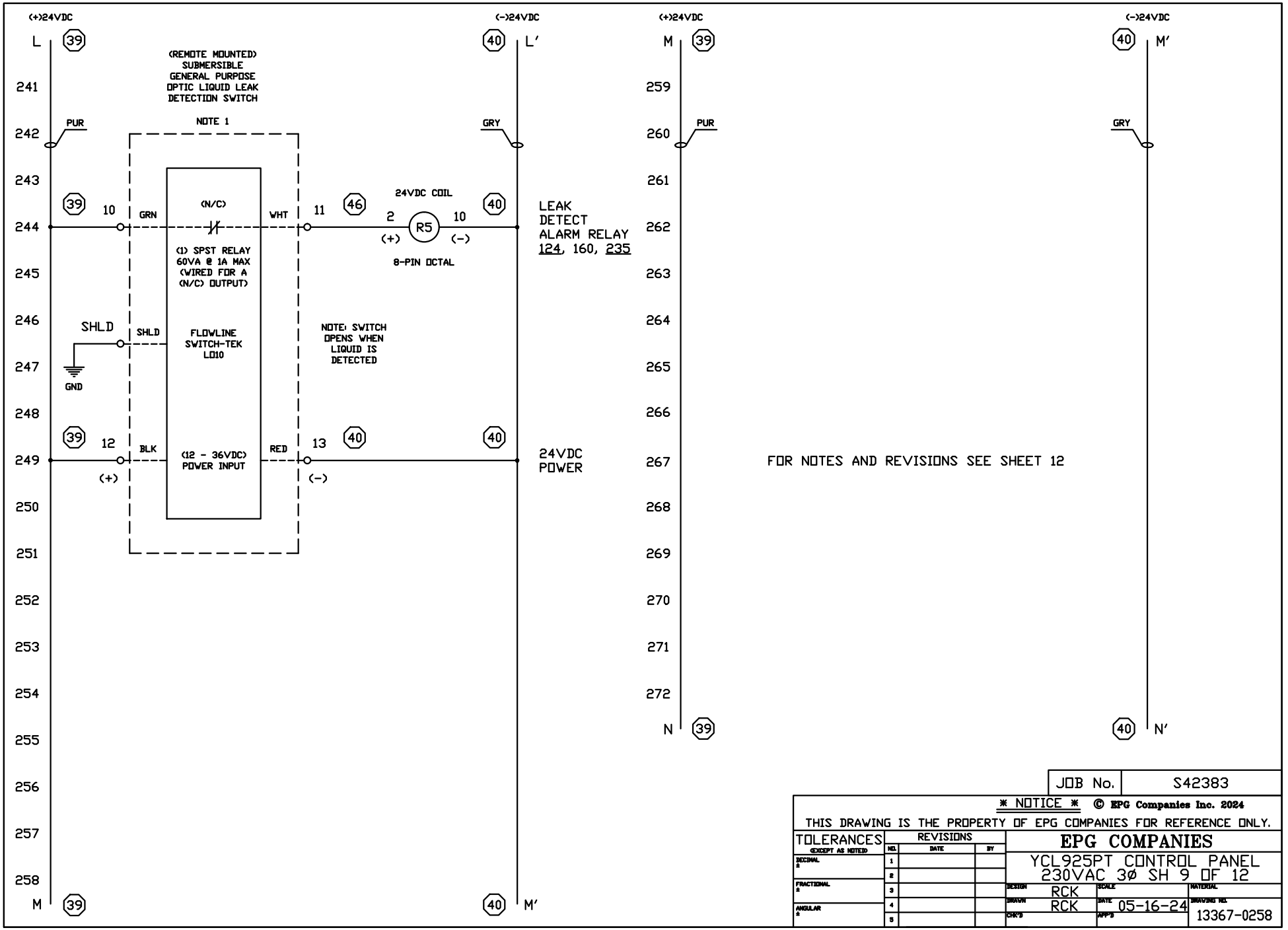

JOB No.	S42383

* NOTICE * © EPG Companies Inc. 2024

THIS DRAWING IS THE PROPERTY OF EPG COMPANIES FOR REFERENCE ONLY.

TOLERANCES (EXCEPT AS NOTED)	REVISIONS			EPG COMPANIES		
DECIMAL ±	NO.	DATE	BY	YCL925PT CONTROL PANEL 230VAC 3Ø SH 9 OF 12		
FRACTIONAL ±	1					
ANGULAR ±	2					
	3			DESIGN RCK	SCALE	MATERIAL
	4			DRAWN RCK	DATE 05-16-24	DRAWING NO. 13367-0258
	5			CHK'D	APP'D	

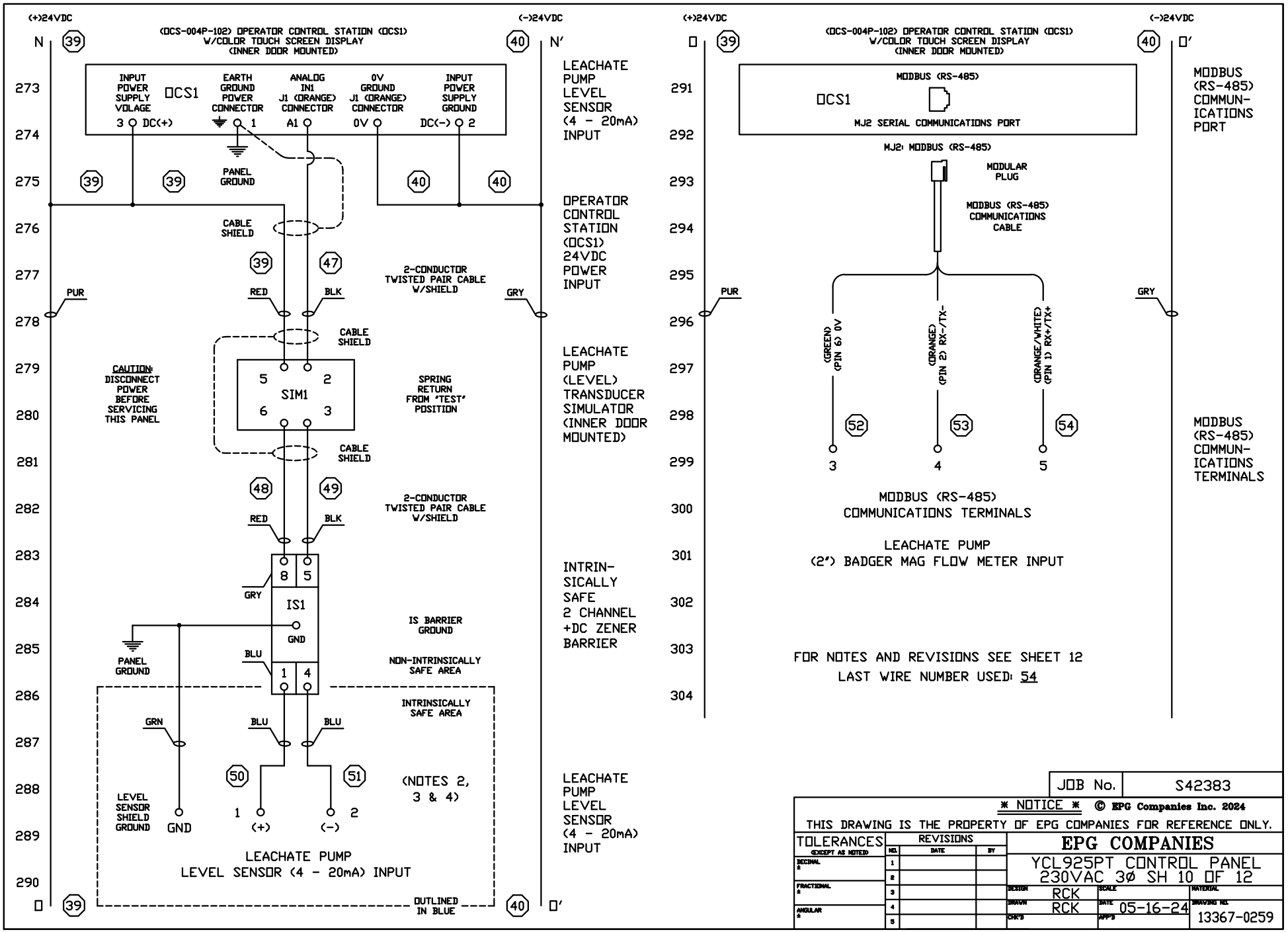

JOB No.	S42383

* NOTICE * © EPG Companies Inc. 2024
THIS DRAWING IS THE PROPERTY OF EPG COMPANIES FOR REFERENCE ONLY.

TOLERANCES (EXCEPT AS NOTED)
DECIMAL ±
FRACTIONAL ±
ANGULAR ±

REVISIONS

NO.	DATE	BY
1		
2		
3		
4		
5		

EPG COMPANIES

YCL925PT CONTROL PANEL
230VAC 3Ø SH 10 OF 12

DESIGN	RCK	SCALE	MATERIAL
DRAWN	RCK	DATE 05-16-24	DRAWING NO. 13367-0259
CHK'D		APP'D	

FIELD WIRING TERMINALS

LEVEL SENSOR (INTRINSICALLY SAFE TERMINALS)

L/N 288

1	— (+) RED	LEACHATE PUMP LEVEL SENSOR (4 - 20mA) INPUT (NOTES 2, 3 & 4)
2	— (-) BLACK	
GND	— SHIELD GROUND	

MODBUS (RS-485) COMMUNICATIONS TERMINALS

L/N 298

3	— (PIN 6)	— 0V	— GREEN	MODBUS (RS-485) COMMUNICATIONS TERMINALS W/(1) 2" MAG FLOW METER INPUT
4	— (PIN 2)	— RX-/TX-	— ORANGE	
5	— (PIN 1)	— RX+/TX+	— ORN/WHT	

TANK LEVEL SENSOR (DRY INPUT CONTACT)

L/N 97

6	(N/C) TANK LEVEL (FLOAT) SENSOR (DRY INPUT CONTACT)
7	

REMOTE DISABLE (DRY INPUT CONTACT)

L/N 103

8	(N/O) REMOTE DISBLE (DRY INPUT CONTACT)
9	

FOR NOTES AND REVISIONS SEE SHEET 12

LOAD (115VAC)

L/N 128

A	— L1	EXTERNAL (TOP MOUNTED) HIGH-HIGH LEVEL ALARM (TRANSDUCER FAILURE) WARNING LIGHT (L4)
B	— N	

LOAD (24VDC)

L/N 244

10	— GRN	(REMOTE MOUNTED) 24VDC OPTIC LEAK DETECTION SWITCH
11	— WHT	
GND	— SHLD GND	
12	— (+) BLK	
13	— (-) RED	

ALARM (DRY OUTPUT CONTACTS)

L/N 115

14	TANK FULL SHUTDOWN ALARM W/1-N/O & 1-N/C (DRY OUTPUT CONTACTS) (PASS-ALONG)
15	
16	

JOB No.	S42383

* NOTICE * © EPG Companies Inc. 2024
THIS DRAWING IS THE PROPERTY OF EPG COMPANIES FOR REFERENCE ONLY.

TOLERANCES (EXCEPT AS NOTED)
DECIMAL ±
FRACTIONAL ±
ANGULAR ±

REVISIONS

NO.	DATE	BY
1		
2		
3		
4		
5		

EPG COMPANIES

YCL925PT CONTROL PANEL
230VAC 3Ø SH 11 OF 12

DESIGN	RCK	SCALE	MATERIAL
DRAWN	RCK	DATE 05-16-24	DRAWING NO. 13367-0260
CHK'D		APP'D	

FIELD WIRING TERMINALS

LOAD (115VAC)

L/N 80

17	— N	HEAT TRACE CIRCUIT (FUSED) 5A (MAX) @ 115VAC 1PH POWER OUTPUT (F8)
18	— L1	
GND	— GND	

LOAD (115VAC)

L/N 86

19	— N	(REMOTE MOUNTED) SELF-TEST GFCI DUPLEX CONVENIENCE OUTLET (OUT1) (FUSED) 15A (MAX) @ 115VAC 1PH POWER OUTPUT (F9)
20	— L1	
GND	— GND	

LOAD (230VAC)

23	—	CONTROL POWER TRANSFORMER (T1) 230VAC 1ø PRIMARY OUTPUT POWER
24	—	
L/N 43 GND	—	TRANSFORMER GROUND (NOTE 6)
21	— POWER	CONTROL POWER TRANSFORMER (T1) 115VAC/1ø SECONDARY INPUT POWER
22	— COMMON	

NOTES:

1. NOT PART OF CONTROLLER
2. REFERENCE INSTALLATION OF INTRINSICALLY SAFE INSTRUMENT SYSTEMS IN CLASS I HAZARDOUS LOCATIONS, ANSI/ISA-RP 12.6-1987, SECTION 4.5.4
3. WARNING: SUBSTITUTION OF COMPONENTS MAY IMPAIR INTRINSIC SAFETY
4. INSTALL IN ACCORDANCE WITH ARTICLE 504 OF THE NATIONAL ELECTRIC CODE
5. SELECTOR SWITCH, (SS1) WILL SPRING RETURN FROM THE "HAND" POSITION
6. SEE BULLETIN 7020 FOR THE PROPER INSTALLATION OF THE POWER TRANSFORMER (T1) AND THE CONTROL POWER TRANSFORMER GROUND

JOB No.	S42383

* NOTICE * © EPG Companies Inc. 2024
THIS DRAWING IS THE PROPERTY OF EPG COMPANIES FOR REFERENCE ONLY.

TOLERANCES (EXCEPT AS NOTED)	REVISIONS			EPG COMPANIES		
DECIMAL ±	NO.	DATE	BY	YCL925PT CONTROL PANEL 230VAC 3ø SH 12 OF 12		
FRACTIONAL ±	1			DESIGN RCK	SCALE	MATERIAL
ANGULAR ±	2			DRAWN RCK	DATE 05-16-24	DRAWING NO. 13367-0261
	3			CHK'D	APP'D	
	4					
	5					

BJBGE-100B

GAS EFFECT BREAKOUT JUNCTION BOX FOR LEVEL SENSOR

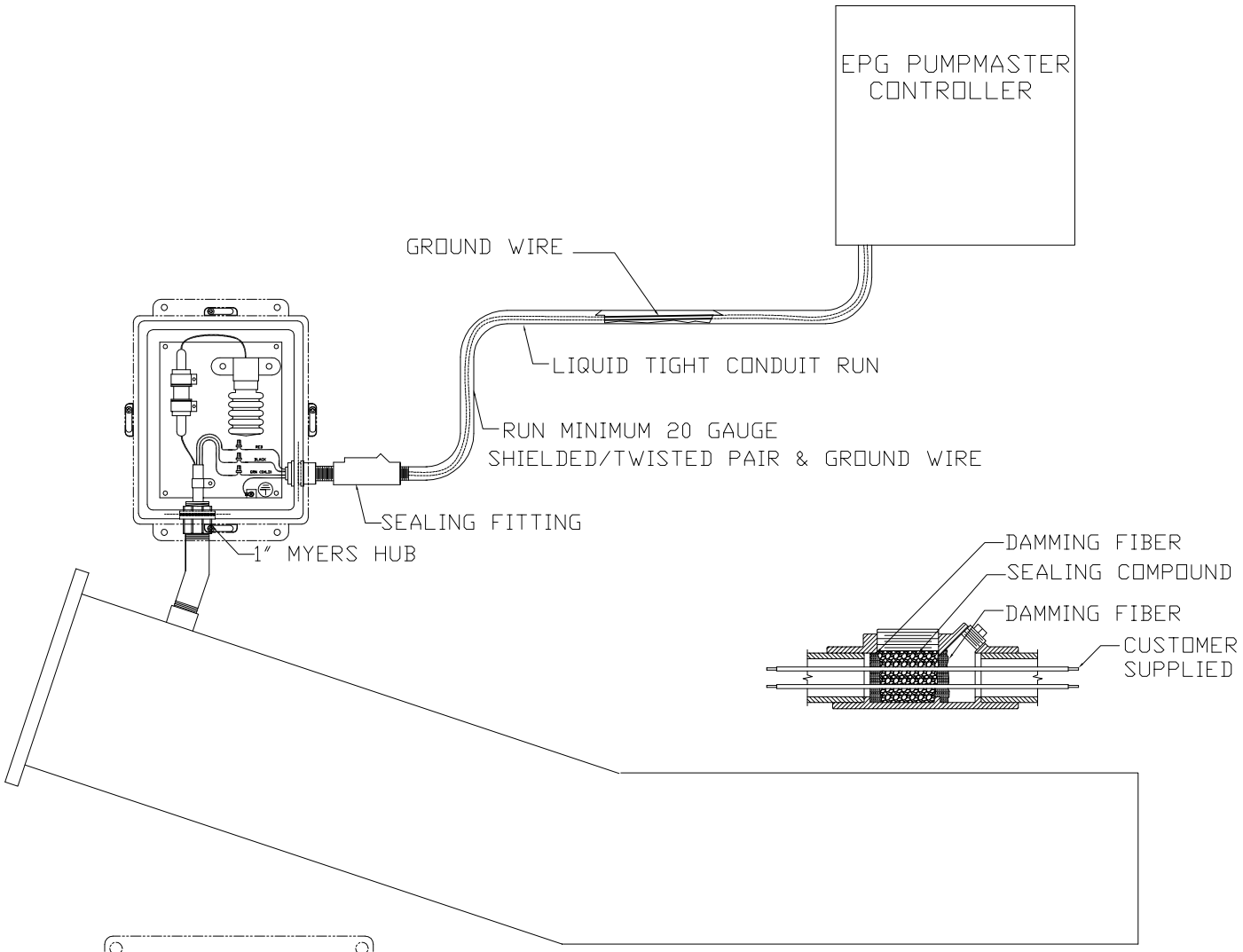

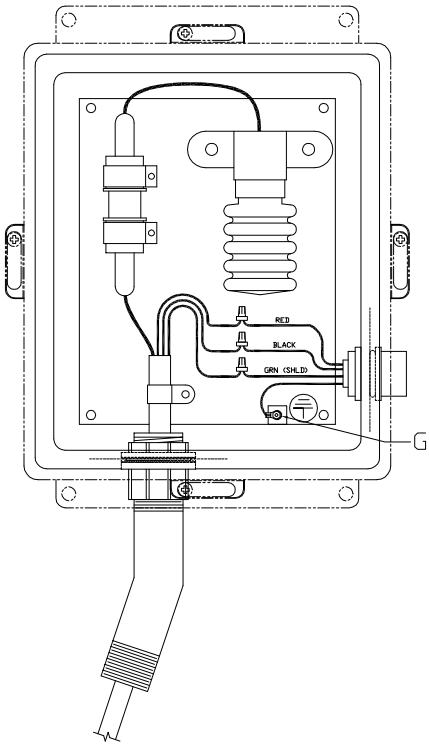

NOTE: AT LEAST ONE MYERS HUB MUST BE INSTALLED TO THE BOTTOM SIDE (AS MOUNTED) OF THE BJBGE-100B BREAKOUT BOX TO AVOID THE BUILD UP OF CONDENSATION. (AS SHOWN)

* NOTICE * © 2012 EPG Companies Inc.

REFERENCE

TOLERANCES (EXCEPT AS NOTED)	REVISIONS NO.	DATE	BY
DECIMAL ±	1	08-06-12	JRT
	2	08-15-12	JRT
FRACTIONAL ±	3	01-08-13	JRT
ANGULAR ±	4	04-10-14	MEF
	5		

EPG COMPANIES

TYPICAL INSTALLATION

DESIGN	EJH	SCALE	NONE	MATERIAL
DRAWN	EJH	DATE	06-14-12	DRAWING NO.
CHK'D	DGL	APP'D		09650-0000

BJBP500

BREAKOUT JUNCTION BOX FOR MOTOR LEAD

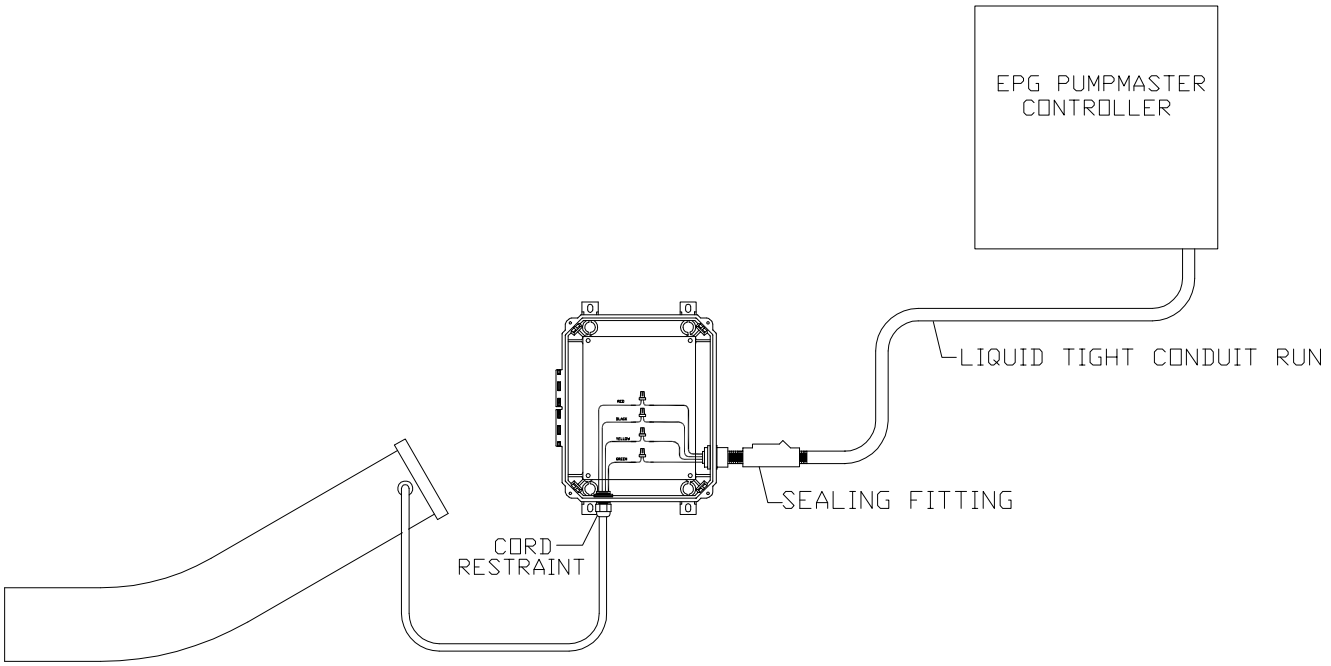

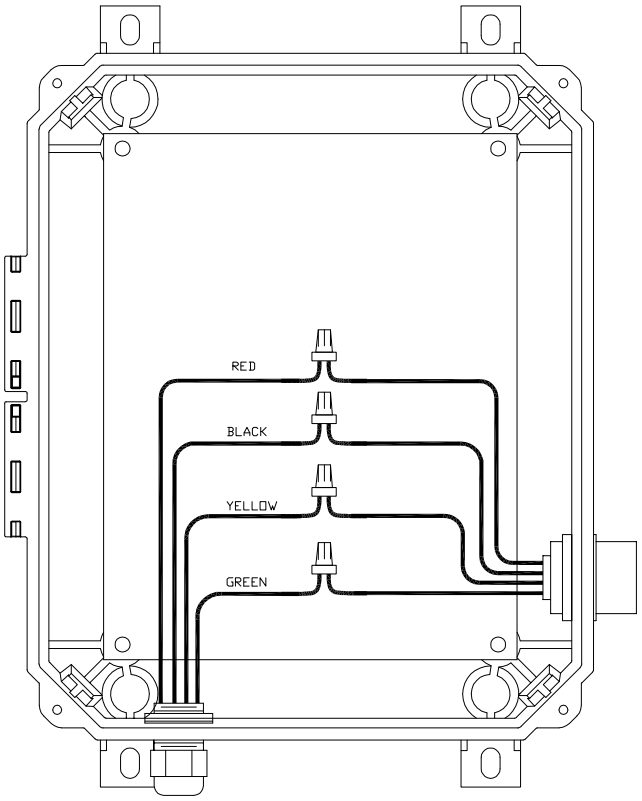

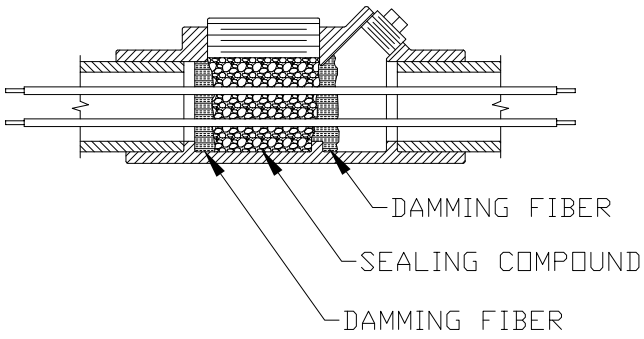

NOTE:

BOX DIMENSIONS (OUTER WALL):
10 3/4" X 8 3/4" X 6"

MOUNTING HOLES FOR 5/16" BOLT/SCREW,
12 1/8" X 6" CENTER TO CENTER, 4 PL.

* NOTICE * © EPG Companies Inc. 2002

REFERENCE

TOLERANCES (EXCEPT AS NOTED)	REVISIONS NO.	DATE	BY
DECIMAL ±	1		
FRACTIONAL ±	2		
ANGULAR ±	3		
	4		
	5		

EPG COMPANIES

TYPICAL INSTALLATION

DESIGN	SCALE NONE	MATERIAL
DRAWN U.E.V.	DATE 05/07/02	DRAWING NO. 03626-0500
CHK'D	APP'D	

Model NW Stainless Steel Discharge Adapter

For Leachate, Monitoring, and Remediation Piping Applications

MODEL	"A"	"B"	"C"	Minimum I.D.	Weight (lbs.)
NW1.5SS-C	1.5" NPT	4"	1.5” NPT	8"	8
NW2SS-C	2" NPT	5"	2” NPT	8"	12
NW3SS	3" NPT	6.25"	1.5” NPT	12"	26
NW4SS	4" NPT	8.125"	4” NPT	12"	33
NW6SS	6” NPT	11.5”	3” NPT	18”	50

- 316 stainless steel construction for “C” models. All others are 304 Stainless Steel
- Insert and housing are tapered for easy installation and removal
- Viton® O-Ring seal
- EPDM gasket for inner and outer wall seal
- Extended length nipple on housing allows adapter to fit from 1/4" to 4" thick wall pipe
- 1.5", 2", 3", 4", 6” NPT sized fittings for pump pipe, lift out pipe and discharge pipe
- Tested to 300 PSIG

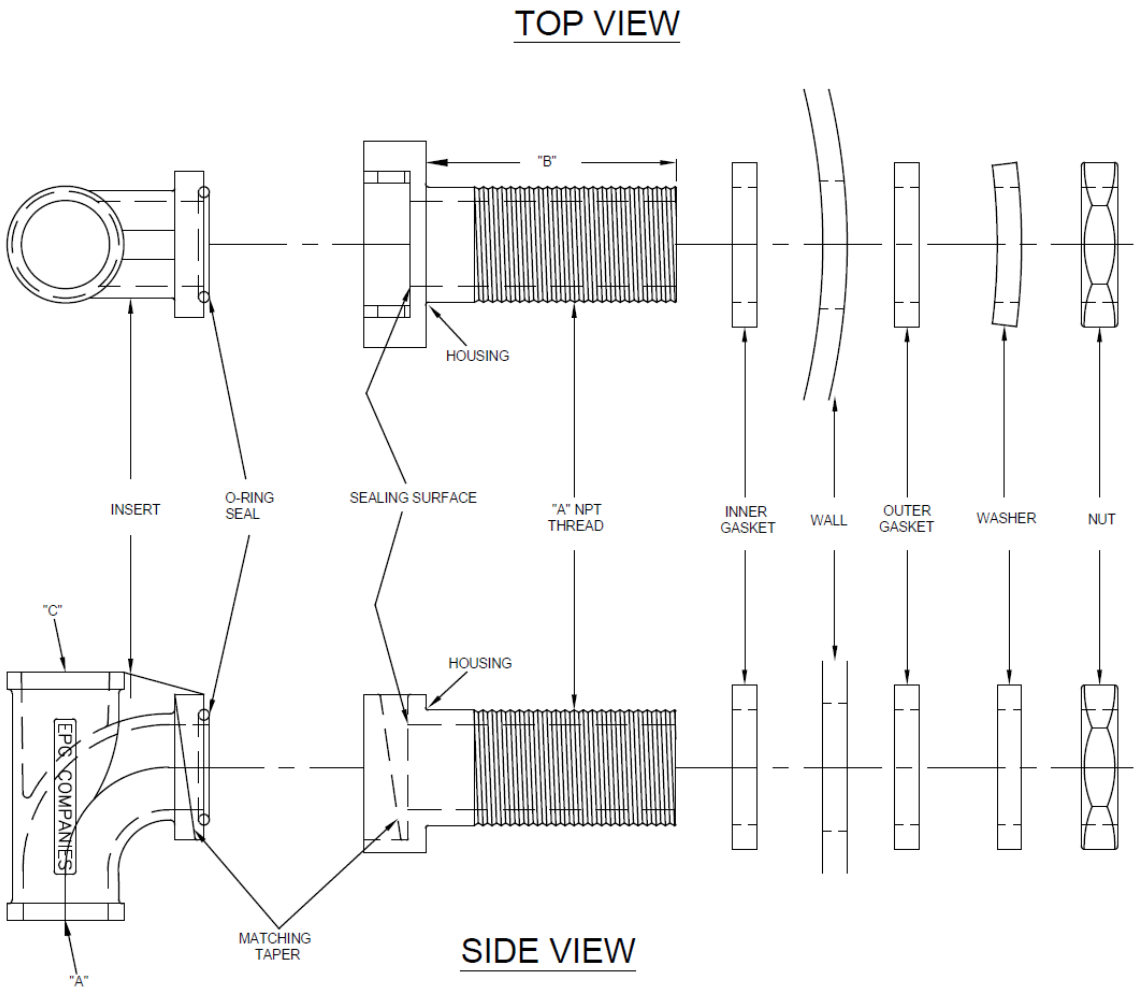

© 2023 EPG Companies Inc.

Installation Instructions - NW Disconnect

For Leachate, Monitoring, and Remediation Pumping Applications

- Using correctly sized hole saw, drill thru one wall of the riser in alignment with the force main.
- Install inner gasket on the threaded NW tail.
- Install the NW tail thru hole in riser.
- Install outside gasket, backup washer & locknut, tighten lock nut until the NW tail is secure.
- Lubricate the o-ring and install into the o-ring groove in the NW head.

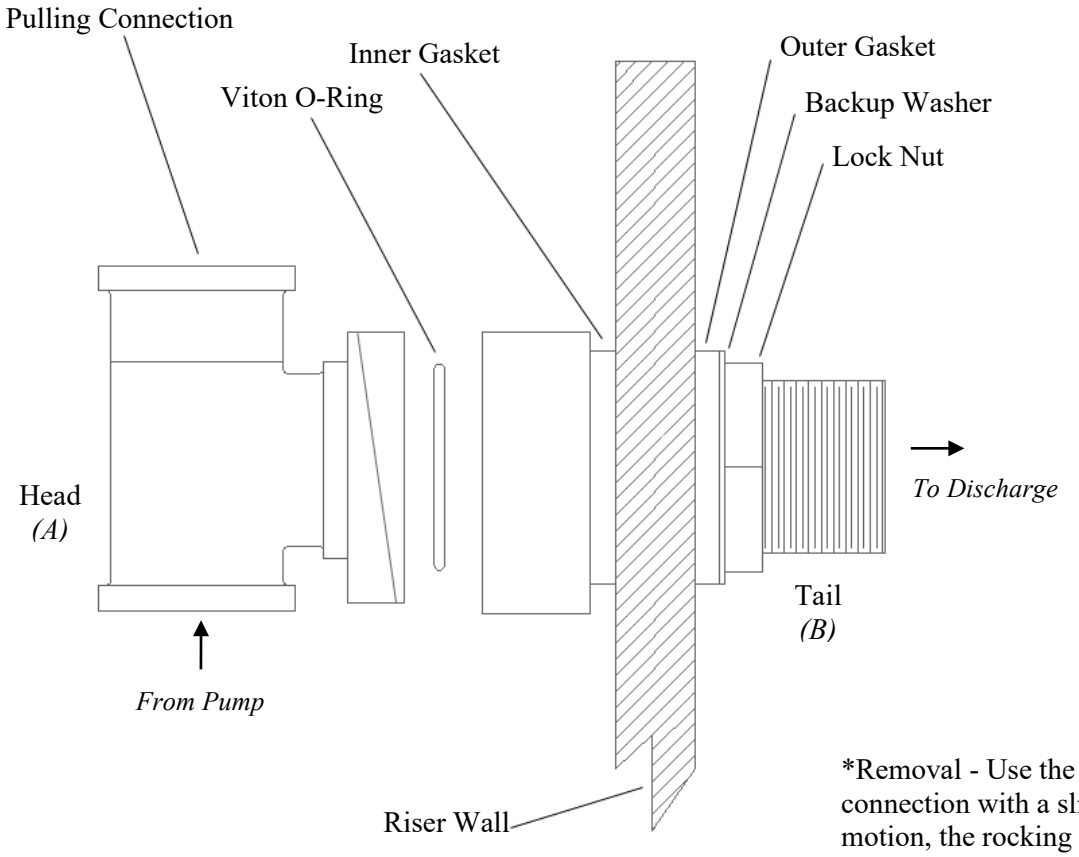

*Removal - Use the pulling connection with a slight rocking motion, the rocking motion helps unseat the taper.

MODEL	"A"	"B"	Hole Saw Size
NW1.5SS-C	1-1/2" NPT	1-1/2" NPT	2"
NW2SS-C	2" NPT	2" NPT	2-1/2"
NW3SS	3" NPT*	3" NPT	3-5/8"
NW4SS	4" NPT	4" NPT	4-3/4"
NW6SS	6” NPT*	6” NPT	6-3/4”

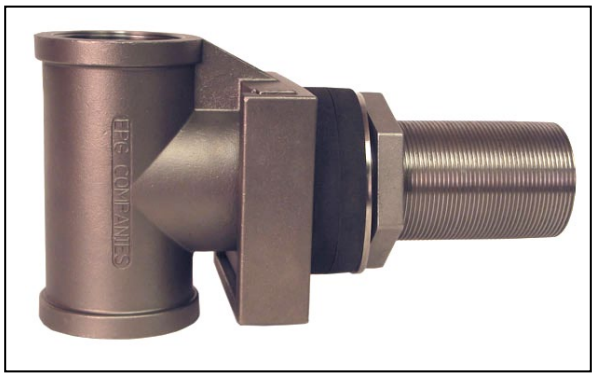

** Indicates Model Has 1.5” Pulling Connection*

© 2023 EPG Companies Inc.

VALVE
DATA SHEET

2” MNPT Combination Air Release Valve

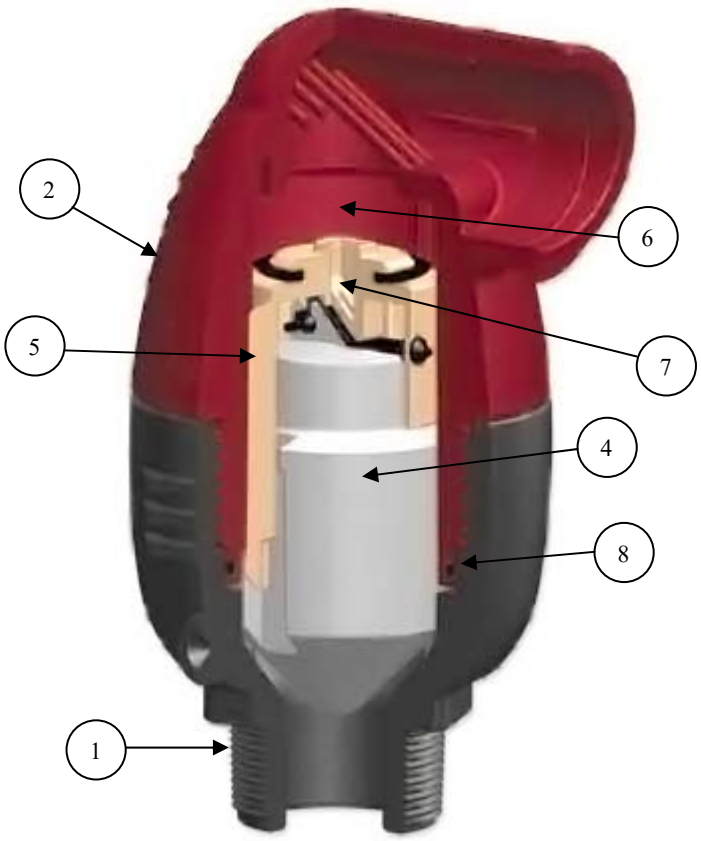

Model AVR200

Air and Vacuum Release Valve

Parts List	Material
1) Base NPT	Glass Reinforced Nylon
2) Body	Glass Reinforced Nylon
3) Down Outlet	Polypropylene
4) Float	Polypropylene
5) Kinetic Plug	Glass Reniforced Nylon
6) Kinetic Orifice	EPDM
7) Automatic Orifice	EPDM
8) O-Ring	EPDM

Specifications

Height: 9-1/16”
Width: 5-5/8”
Valve Vent: 2”
Valve Base: 2” MNPT





Down outlet and connection (1-1/2” FNPT) to drainage pipe

VALVE LOGIC AND FUNCTION

The majority of pipeline systems require both air and vacuum valves and air release valves to provide pipeline protection and efficiency. The innovative design of this kinetic float provides a perfect combination of these two functions in one compact unit. The AVR200 releases large volumes of air from a filling pipeline, closes when the pipeline is filled, and reopens to admit large volumes of air should pipeline pressure drop. It features a unique kinetic shield to isolate the kinetic float from the air flow and prevent it from being blown closed. The inverted “U” kinetic float, however, is modified to include a small orifice and the automatic float which work together to release the accumulated air pockets in pressurized operating systems.

© 2016 EPG Companies Inc.

Badger Meter

M-Series® Mag Meter
M-2000 Detector

GENERAL

The Badger Meter M-Series® mag meter model M-2000 detector is the result of years of research and field use in electromagnetic flow meters. Based on Faraday's law of induction, these meters can measure almost any liquid, slurry or paste that has minimum electrical conductivity.

Designed, developed and manufactured under strict quality standards, the M-Series meter features sophisticated, processor-based signal conversion with accuracies of ±0.25 percent. The wide selection of liner and electrode materials helps ensure maximum compatibility and minimum maintenance over a long operating period.

OPERATION

The flow meter is a stainless steel tube lined with a nonconductive material. Outside the tube, two DC powered electromagnetic coils are positioned diametrically opposing each other. Perpendicular to these coils, two electrodes are inserted into the flow tube. Energized coils create a magnetic field across the whole diameter of the pipe.

As a conductive fluid flows through the magnetic field, a voltage is induced across the electrodes. This voltage is proportional to the average flow velocity of the fluid and is measured by the two electrodes. This induced voltage is then amplified and processed digitally by the converter to produce an accurate analog or digital signal. The signal can then be used to indicate flow rate and totalization or to communicate to remote sensors and controllers.

This technology provides many advantages. With no parts in the flow stream, there is no pressure loss. Also, accuracy is not affected by temperature, pressure, viscosity, density or flow profile. Finally, with no moving parts, there is practically no maintenance required.

APPLICATION

Because of its inherent advantages over other more conventional technologies, this meter can be used in the majority of industrial flow applications. Whether the fluid is water or highly corrosive, very viscous, contains a moderate amount of solids or requires special handling, this meter can accurately measure fluid flow. Today, magnetic meters are successfully used in industries including food and beverage, pharmaceutical, water and wastewater and chemical.

ELECTRODES

When looking from the end of the meter into the inside bore, the two measuring electrodes are positioned at three o'clock and nine o'clock. M-2000 mag meters have an "empty pipe detection" feature. This is accomplished with a third electrode positioned in the meter between twelve o'clock and one o'clock.



M-2000 Detector

If this electrode is not covered by fluid for a minimum five-second duration, the meter will display an "empty pipe detection" condition, send out an error message if desired, and stop measuring to maintain accuracy. When the electrode again becomes covered with fluid, the error message will disappear and the meter will continue measuring.

As an option to using grounding rings, a grounding electrode (fourth electrode) can be built into the meter during manufacturing to assure proper grounding. The position of this electrode is at five o'clock.

FEATURES

- ±0.25 percent accuracy independent of fluid viscosity, density and temperature
- Unaffected by most solids contained in fluids
- Pulsed DC magnetic field for zero point stability
- No pressure loss for low operational costs
- Corrosion resistant liners for long life
- Calibrated in state-of-the art facilities
- Integral and remote signal converter availability
- Optional grounding rings or grounding electrode
- Measurement largely independent of flow profile
- NSF listed

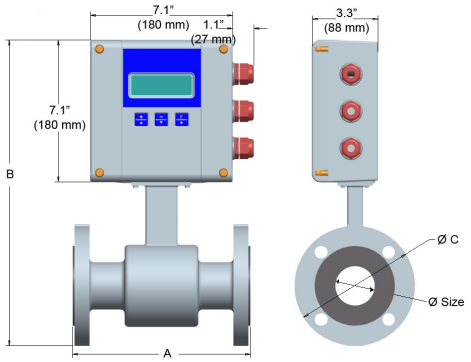

Meter with M-2000 amplifier

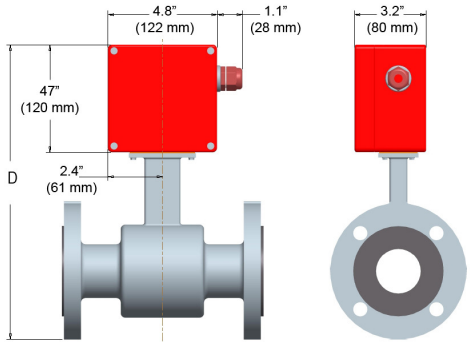

Meter with junction box for remote M-2000 amplifier

Size		A		B		C		D		Est. Weight with M-2000		Flow Range			
												LPM		GPM	
inch	mm	inch	mm	inch	mm	inch	mm	inch	mm	lbs	kg	min	max	min	max
1/4	6	6.7	170	14.0	356	3.5	89	11.4	288	10	4.5	0.063	20	0.02	5
5/16	8	6.7	170	14.0	356	3.5	89	11.4	288	10	4.5	0.114	34	0.03	9
3/8	10	6.7	170	14.0	356	3.5	89	11.4	288	10	4.5	0.177	53	0.05	14
1/2	15	6.7	170	14.0	356	3.5	89	11.4	288	10	4.5	0.416	125	0.11	33
3/4	20	6.7	170	14.2	361	3.9	99	11.5	293	13	5.5	0.75	225	0.2	59
1	25	8.9	225	14.4	366	4.3	108	11.7	298	18	8.0	1.20	350	0.3	93
1 1/4	32	8.9	225	15.2	386	4.6	117	12.5	318	20	9.0	2.00	575	0.5	152
1 1/2	40	8.9	225	15.4	390	5.0	127	12.7	322	21	9.5	3.00	900	0.8	239
2	50	8.9	225	15.9	403	6.0	152	13.2	335	26	11.5	4.70	1400	1	373
2 1/2	65	11.0	280	17.1	434	7.0	178	14.4	366	52	23.5	8	2400	2	631
3	80	11.0	280	17.3	440	7.5	191	14.7	372	54	24.5	12	3600	3	956
4	100	11.0	280	18.4	466	9.0	229	15.7	398	56	25.5	19	5600	5	1493
5	125	15.8	400	19.6	498	10.0	254	16.9	430	58	26.0	30	8800	8	2334
6	150	15.8	400	20.6	524	11.0	279	17.9	456	60	27.0	40	12700	11	3361
8	200	15.8	400	22.5	572	13.5	343	20.4	518	86	39.0	75	22600	20	5975
10	250	19.7	500	26.8	681	16.0	406	24.1	613	178	81.0	120	35300	30	9336
12	300	19.7	500	28.9	734	19.0	483	26.2	666	207	94.0	170	50800	45	13444
14	350	19.7	500	30.8	782	21.0	533	28.2	716	258	117	230	69200	60	18299
16	400	23.6	590	33.7	856	23.5	597	31.0	788	306	139	300	90400	80	23901
18	450	23.6	590	35.0	890	25.0	635	32.4	822	400	181	380	114000	100	30250
20	500	23.6	590	38.2	969	27.5	699	35.5	901	493	224	470	140000	125	37346
22	550	23.6	590	39.6	1005	29.5	749	36.9	937	523	237	570	170000	150	45188
24	600	23.6	590	42.2	1071	32.0	813	39.5	1003	552	251	680	200000	180	53778
28	700	23.6	590	46.2	1173	36.5	927	44.0	1118	648	294	920	275000	240	73100
30	750	31.5	800	48.3	1228	39.0	984	45.7	1161	702	319	1060	315000	280	84000
32	800	31.5	800	52.2	1325	41.4	1015	49.5	1257	768	349	1200	361000	320	95600
36	900	31.5	800	55.3	1405	46.0	1168	54.1	1374	848	385	1500	457000	400	121000
40	1000	31.5	800	60.0	1525	50.2	1230	57.4	1457	922	419	1900	565000	500	149300
42	1050	36.0	914	66.0	1675	53.0	1346	63.4	1610	1198	499	2100	620000	550	164600
48	1200	39.4	1000	69.9	1775	59.4	1455	67.2	1707	1208	549	2700	814000	720	215100
54	1400	39.4	1000	78.5	1995	68.4	1675	75.9	1927	1362	619	3700	1100000	980	292700

SPECIFICATIONS - Detector

Flow Range: 0.1 - 39.4 fps (0.03-12 m/s)
Sizes: 1/4 inch to 54 inches (6 mm to 1400 mm)
Min. Conductivity: ≥ 5 micromhos/cm
Accuracy:
± 0.25 percent of rate for velocities greater than 1.64 ft/s (0.50 m/s)
± 0.004 ft/s (± 0.001 m/s) for velocities less than 1.64 ft/s (0.50 m/s)
Electrode Materials: Standard: Alloy C
Optional: 316 stainless steel, gold/platinum plated, tantalum, platinum/rhodium
Liner Material: PFA up to 3/8 inch, PTFE 1/2 inch to 24 inches, Soft and Hard Rubber from 1 to 54 inches, Halar® from 14 to 40 inches
NSF Listed: Models with hard rubber liner 4-inch size and up; PTFE liner - All sizes.

Fluid Temperature:
With Remote Amplifier:
PFA, PTFE & Halar 311°F (155°C)
Rubber 178°F, (80°C)
With Meter Mounted Amplifier:
PFA, PTFE & Halar 212°F (100°C)
Rubber 178°F, (80°C)
Pressure Limits:
Maximum allowable non-shock pressure and temperature ratings for steel pipe flanges, according to American National Standard ANSI B16.5. (Example: 150-pound flanges, rated 285 PSI at ambient temperature.) (Example: 300-pound flange rated 740 PSI at ambient temperature.)
Coil Power: Pulsed DC
Ambient Temperature: -4°F to 140°F (-20°C to 60°C)

Pipe Spool Material: 316 stainless steel
Meter Housing Material: Carbon steel welded
Flanges: Carbon steel - Standard (ANSI B16.5 Class 150 RF)
316 stainless steel - Optional
Meter Enclosure Classification: NEMA 4X (IP66)
Optional: Submersible NEMA 6P (remote amplifier required)
Junction Box Enclosure Protection:
(for remote amplifier option) Powder coated die-cast aluminum, NEMA 4 (IP65)
Cable Entries: 1/2-inch NPT Cord Grip
Optional Stainless Steel Grounding Rings:

Meter Size	Thickness (of one ring)
up through 10 inches	.135 inch
12 to 20 inches	.187 inch

M-Series is a registered trademark of Badger Meter, Inc.
Other trademarks appearing in this document are the property of their respective entities.
©2011 Badger Meter, Inc. All rights reserved.

Due to continuous research, product improvements and enhancements, Badger Meter reserves the right to change product or system specifications without notice, except to the extent an outstanding contractual obligation exists.

Badger Meter | P.O. Box 245036, Milwaukee, Wisconsin 53224-9536
800-876-3837 | infocentral@badgermeter.com | www.badgermeter.com

TSURUMI PUMP

VANCS - SERIES - PU
(FRP) SEMI-VORTEX - SEWAGE & WASTEWATER PUMPS

PERFORMANCE CURVE

MODEL	BORE	HP	KW	RPM	SOLIDS DIA	LIQUID	SG.	VISCOSITY	TEMP.
50PU(A/W)2.4S -62	2" / 50mm	0.54	0.40	3397	1.38" / 35mm	Water	1.0	1.123 cSt.	60°F

PUMP TYPE	PHASE	VOLTAGE	AMPERAGE	HZ	STARTING METHOD	INS. CLASS
Semi-Vortex - Sewage & Wastewater	Single	115 / 230	5.8 / 2.9	60	Capacitor-Start	E

CURVE No.	DATE	PHASE	VOLTAGE	AMPERAGE	HZ	STARTING METHOD	INS. CLASS
-	-	-	-	-	-	-	-

REMARKS:
FLOATS (2)

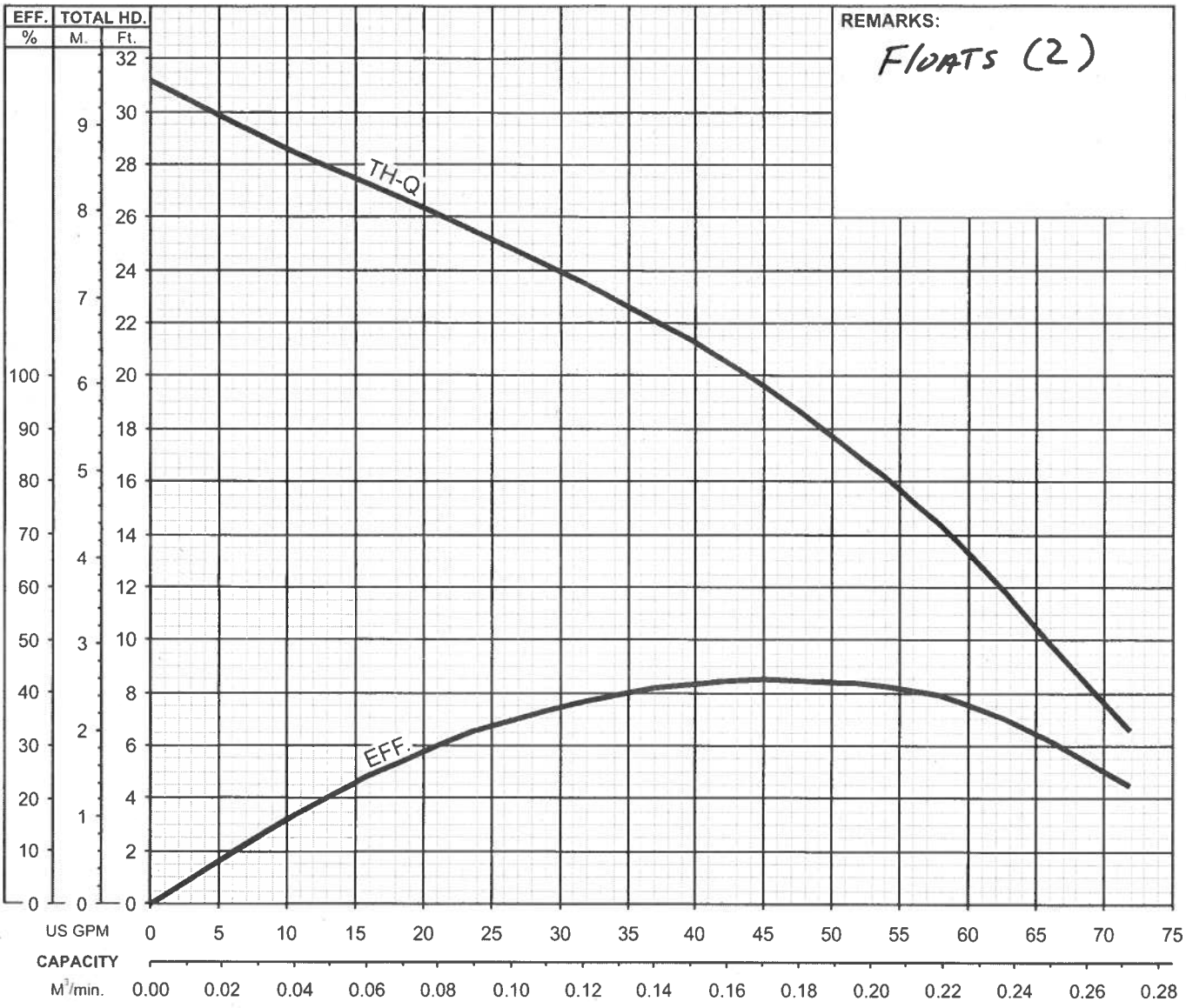

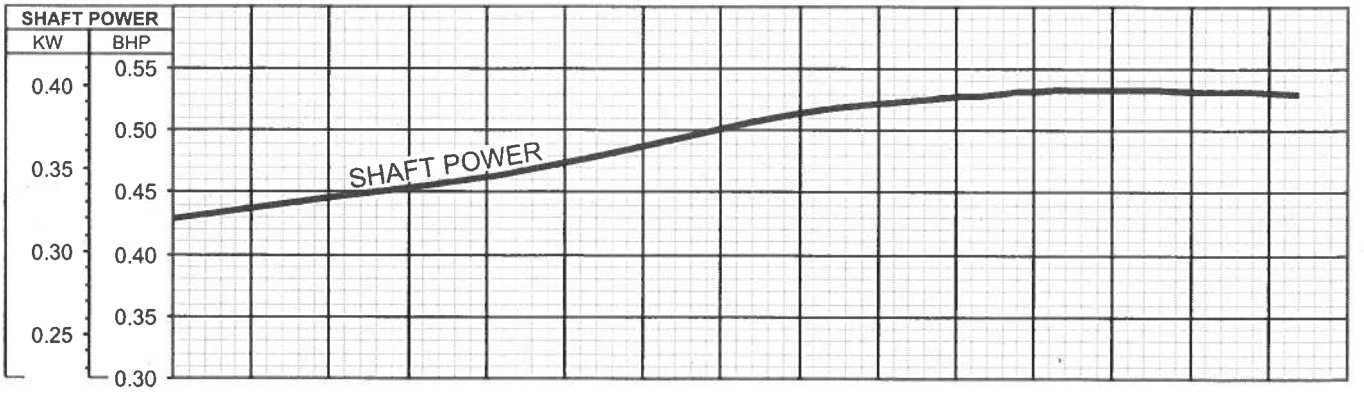

TSURUMI PUMP

VANCS-SERIES - PU
(FRP) SEMI-VORTEX - SEWAGE & WASTEWATER PUMPS

DIMENSIONS

50PU2.25S-62
50PU2.25-62
50PU2.4S-62
50PU2.4-62
50PU2.75S-62
50PU2.75-62

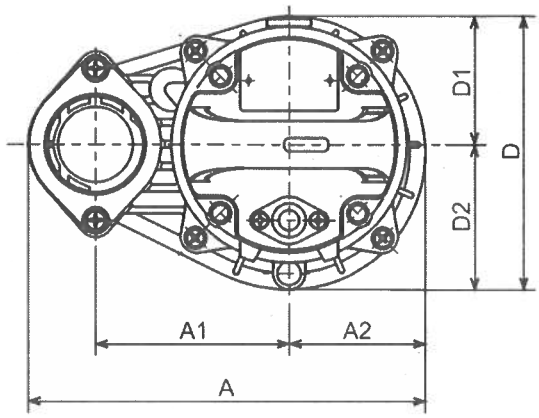

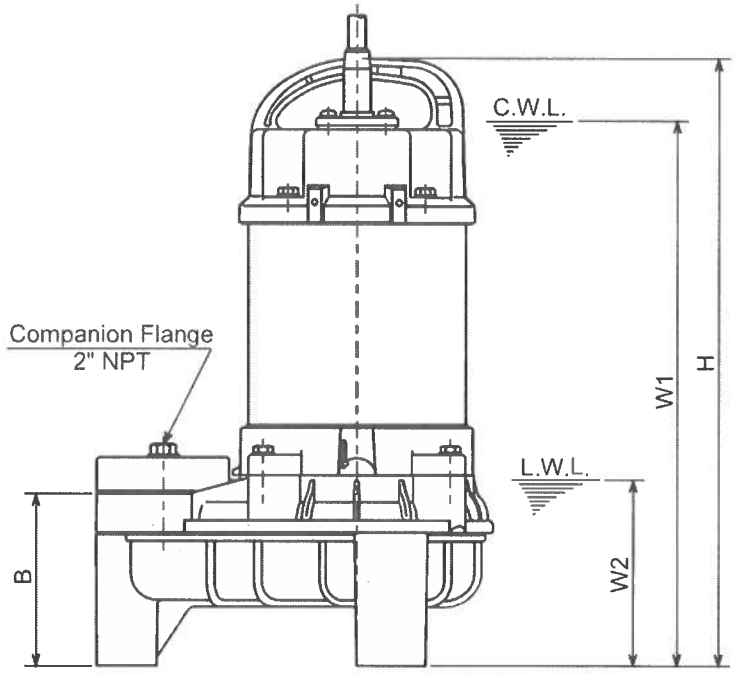

C.W.L. :Continuous running Water Level
L.W.L. :Lowest running Water Level

DIMENSIONS:USCS (Inch)

Model	HP	NOM. SIZE	Pump & Motor								C.W.L.	L.W.L.	Wt.
			A	A1	A2	B	D	D1	D2	H	W1	W2	(lbs.)
50PU2.25S-62	1/3	2"	9 5/16	4 1/2	3 3/16	4	6 3/8	3	3 3/8	14 3/16	12 3/4	4 3/8	15.6
50PU2.25-62	1/3	2"	9 5/16	4 1/2	3 3/16	4	6 3/8	3	3 3/8	13 3/4	12 1/4	4 3/8	13.4
50PU2.4S-62	1/2	2"	9 5/16	4 1/2	3 3/16	4	6 3/8	3	3 3/8	14 3/16	12 3/4	4 3/8	15.6
50PU2.4-62	1/2	2"	9 5/16	4 1/2	3 3/16	4	6 3/8	3	3 3/8	14 3/16	12 3/4	4 3/8	15.4
50PU2.75S-62	1	2"	9 5/16	4 1/2	3 3/16	4	6 3/8	3	3 3/8	14 15/16	13 5/8	4 3/8	19.6
50PU2.75-62	1	2"	9 5/16	4 1/2	3 3/16	4	6 3/8	3	3 3/8	14 3/4	13 3/8	4 3/8	18.3

DIMENSIONS:METRIC (mm)

Model	kW	NOM. SIZE	Pump & Motor								C.W.L.	L.W.L.	Wt.
			A	A1	A2	B	D	D1	D2	H	W1	W2	(kg)
50PU2.25S-62	0.25	50	236	115	81	102	162	76	86	360	325	110	7.1
50PU2.25-62	0.25	50	236	115	81	102	162	76	86	349	310	110	6.1
50PU2.4S-62	0.40	50	236	115	81	102	162	76	86	360	325	110	7.1
50PU2.4-62	0.40	50	236	115	81	102	162	76	86	360	325	110	7.0
50PU2.75S-62	0.75	50	236	115	81	102	162	76	86	380	345	110	8.9
50PU2.75-62	0.75	50	236	115	81	102	162	76	86	374	340	110	8.3

Selection Table

Category	Series	Discharge Bore mm	Impeller	Model	Motor Output kW 0.15	0.25	0.4	0.75	1.5	2.2	3.7
Sewage	PU	40 – 80	Vortex	Standard Automatic Auto-alternation							
Wastewater	PN	40 – 80	Vortex	Standard Automatic Auto-alternation							
Wastewater -High Head-	PSF	40 – 65	Closed	Standard Automatic Auto-alternation							
Wastewater -Horizontal-	PLS	50	Vortex	Standard							
Seawater	TM	40 – 80	Vortex	Standard Automatic							
Wastewater -Economic-	OM	32	Vortex	Standard Automatic							

Model Number Designation *excluding OM-series

Name of the series
Discharge bore in mm
Number of poles of the motor
Rated motor output in kW

40 PU A 2 .25 S

Operation sub code
None : None automatic operation
A : Automatic operation
W : Auto-alternation operation

Phase
None : Three-phase
S : Single-phase

Guide Rail Fitting System (PU, PN, PSF series only)

The TOK type guide rail fitting system connects the pump to and from the piping easily just by lowering and hoisting the pump, allowing easy maintenance and inspection without the need to enter the sump.
Made of high-quality resin, the TOK is designed for lightweight, small to middle sized pumps.

Accessories

- Duckfoot Bend
- Guide Hook
- Guide Support with Bolts & Nuts
- Lifting Chain with Shackles
  (4m for TOK4-P, 5m for TOK2-65 / 65T)

Guide Rail Fitting Operation

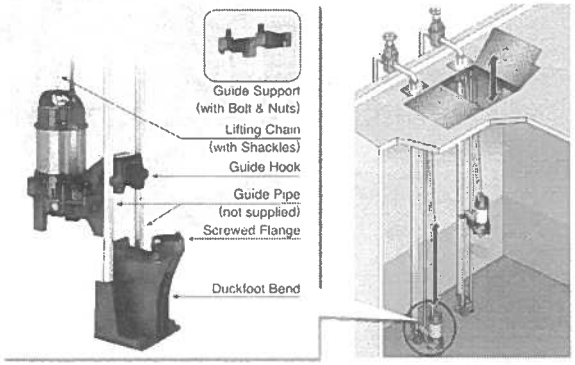

Automatic & Auto-alternation Model

Tsurumi offers an automatic alternation system by a duplex pump comprising an automatic model "A" unit and auto-alternation model "W" unit. The "A" unit is a stand-alone automatic pump and the "W" unit is a pump that has an alternating circuitry. They operate automatically in response to the change in water levels.

Automatic Model

Float Type
Automatic Operation

*Refer to page 17 for the operation of cylindrical float type.



Float Type
(PU, PN, PSF, TM)



Cylindrical Float Type
(OM)

Auto-alternation Model



(PU, PN, PSF)

How the Auto-alternation Model Works

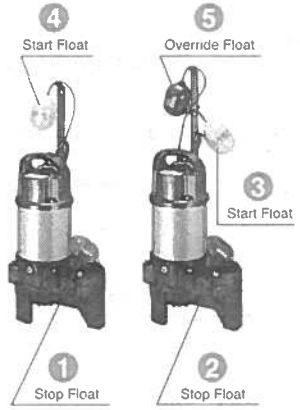

Automatic & Auto-alternation Operation

Primary Operation

1

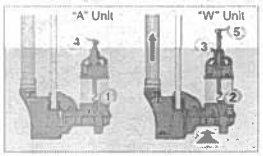

Water level rises and turns the Float #2 up. The Float #2 is activated but the pump does not start. When water level rises to Float #3 and the float is activated, the "W" unit starts.

Unusual Increase of Inflow

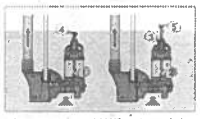

If inflow exceeds the capacity of "W" unit and the water level rises to Float #4, "A" unit starts.

2

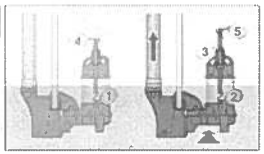

The "W" unit is discharging water (Water level falls).

3

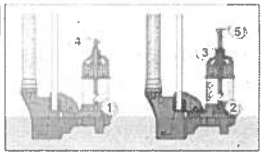

When water level falls to Float #2, the float is activated, and the "W" unit stops. The alternating circuitry deactivates the "W" unit for the next level rise.

Secondary Operation

1

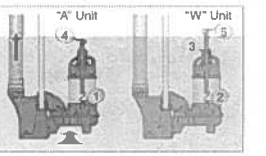

The next time the water level rises, Float #1 on the "A" unit is activated but the unit does not start until Float #4 is activated.

Unusual Increase of Inflow

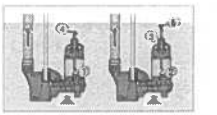

If inflow exceeds the capacity of "A" unit and the water level rises to Float #5, "W" unit starts.

2

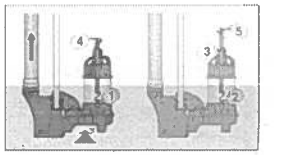

The "A" unit is discharging water (Water level falls).

3

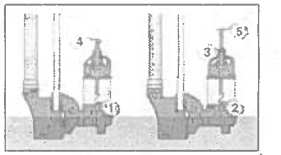

When water level falls and Float #1 is activated, the "A" unit stops. At the same time, "W" unit becomes ready for operation for the next level rise.

EXTENDED LIMITED WARRANTY

This agreement shall be deemed to have been entered into in the State of Minnesota, and shall be construed in accordance with the laws of the State of Minnesota, including Minnesota's enactment of the Uniform Commercial Code. Buyer hereby stipulates and agrees that Hennepin County, Minnesota shall be the proper jurisdiction for adjudicating all claims and controversies arising from this agreement.

Products manufactured by EPG Companies Inc. are warranted for a period of 36 months from date of manufacture to be free from defects of materials and workmanship. It is expressly agreed that the exclusive remedy under this warranty is limited solely to the repair or replacement, at the sole discretion of EPG, of the part that failed. The cost of labor for any field repairs is not covered by this warranty. EPG Companies will not be liable for any damage or wear due to abnormal conditions or improper installation.

To qualify for an Extended 36 Month Limited Warranty, the following conditions must be met.

A. Pumps, controls and accessories must be purchased as a package.
B. Form 200 must be completed by the installer and on file at EPG prior to warranty request.

Products not manufactured by EPG Companies Inc. are covered by the original manufacturer's warranty, which EPG Companies passes through to the purchaser. Warranty determination will be made by the actual manufacturer.

To have a defective part repaired or replaced, you must return the defective product to EPG Companies. Please call (800) 762-8418 or (763) 424-2613 to obtain a RMA number. Send defective product (freight prepaid) with RMA #, description of installation, installation data and failure date to EPG Companies Inc., 19900 County Rd. 81, Maple Grove, MN 55311.

EPG Companies will not be held liable for any incidental or consequential damages, losses or expenses incurred from installation, use or any other reason. THERE ARE NO OTHER WARRANTIES, EXPRESSED OR IMPLIED, INCLUDING IMPLIED WARRANTIES OF EITHER FITNESS FOR A PARTICULAR PURPOSE OR OF MERCHANTABILITY, WHICH EXTEND BEYOND THOSE SPECIFICALLY LISTED HERE.

If equipment is to be stored for a period greater than six months, proper storage precautions must be taken if the warranty is to be maintained. Please contact EPG Companies for specific requirements regarding product storage.

To qualify for the delayed installation warranty you must contact EPG Companies Inc., at (800) 762-8418 or (763) 424-2613 within 60 days of purchase.

 © 2016 EPG Companies Inc.

EPG Companies Inc.

SUBMITTAL ACCEPTANCE FORM

***IMPORTANT NOTICE*:** These submittals have been provided for your prompt review. **Your order will not be entered into production until we receive this signed acceptance form.** Shipment of your order **will not be scheduled** until after we receive this submittal acceptance form.

Submitted to: City of Ames Ash Pond

Date of Submittals: 05/17/24

Submittals Accepted by: _____

Print Name: _____

Title: _____

Date of Acceptance: _____

EPG Job No.: S42383

Return to: **EPG Companies Inc.**
P.O. Box 427
Rogers, MN 55374
Fax (763) 493-4812

Project: City of Ames Ash Pond Closure
SCS Project #: 27219356.02

Section: 33 11 00
Title: Submittal #S1 – HDPE Piping

Submittal Review

- [ ] Conforms as submitted
- [X] Conforms as noted – Resubmittal is:
  - [X] Not required
  - [ ] Noted portions only
  - [ ] Required
  - [ ] For record only
- [ ] Does not conform
- [ ] Not required by contract documents
- [ ] For information only

Corrections or comments made on submittals during this review do not relieve the contractor from compliance with requirements of the drawings and specifications. This check is only for review of general conformance with the design concept of the project and general compliance with the information given in the contract documents. The contractor is responsible for; confirming and correlating all quantities and dimensions; selecting fabrication processes and techniques of construction; coordinating contractor's work with that of all other trades; and performing contractor's work in a safe and satisfactory manner.

Comments:

- 24-inch HDPE DR 17 pipe no longer required, via JB Holland RFI #2.
- 6-inch perforated HDPE is not required for Bid Item #11 (Ash Contact Water Inclined Riser Pipe and Sump Pipe).

Reviewed By: Matt Kuhlenengel	Date: 4/24/2024
SCS QC Review By: Marty Sturzl	Date: 4/25/2024

G:\Project\27219356.02\Data and Calculations\Submittals\S1 - HDPE Pipe\SCS Review S1-HDPE Piping_240424_.docx

SHOP DRAWING TRANSMITTAL

DATE: 4/1/2024

Project: Ames Ash Pond Closure & RDF Ash Pond Construction

Specification Section Number: 33 11 10

Transmittal Number: S1

1st Submittal X or Resubmital _____

Contract Item	Description of Material	Manufacturer	Drawing or Data No.	Action Taken
12	2" IPS DR 11	JM Eagle		
13	3" IPS DR 17	JM Eagle		
8,9,11	6" IPS DR 17	JM Eagle		
44	24" IPS DR 17	JM Eagle		

As stated in the Contract Documents, the undersigned CONTRACTOR's submission of these Shop Drawings or samples shall constitute a representative to the OWNER and the ENGINEER that the CONTRACTOR has either determined and verified all quantities, dimensions, field construction criteria, materials, catalogue numbers and similar data or he assumes full responsibility for doing so, and that he has reviewed and coordinated each Shop Drawing or sample with the requirements of the work and the Contract Documents and he represents to the OWNER and the ENGINEER that item(s) described by these Shop Drawings do comply with the requirements of the Contract Documents. The undersigned Contractor certifies that the equipment included in this submittal complies with the latest requirements of the Occupational Health and Safety Act of 1970 including any standards or regulations established by the U.S. Secretary of Labor in administration of said act, and the Iowa Occupational Safety and Health Statutes.

4/1/2024

(Autorized Signature of Contractor) **(Date)**

JB Holland Construction, Inc.

2092 State Hwy 9, Decorah, IA 52101

Supplier/Subcontractor:

Core & Main

2355 16th Ave SW

Cedar Rapids, IA 52404

319-362-1698

FOR ENGINEER'S USE

n as designated above in accordance with the following legend:

A- No Exception Taken

B- Make Corrections Noted & Resubmit

C- Revise & Resubmit

D- Rejected

E- Submit Specified Item

BY: _____

DATE: _____

LETTER OF TRANSMITTAL

To: JB HOLLAND
Regarding: Ames Ash Pond
Location: AMES, IA
Date: 3/28/2024

2355 16TH AVE SW
CEDAR RAPIDS, IA 52404
PHONE: (319) 362-1698
FAX: (319) 362-3078

WE ARE SENDING YOU:

☒ Shop Drawings ☐ Prints ☐ Plans ☐ Samples ☐ Specifications

☐ Copy of Letter ☐ Attached ☐ Other

Copies	Number	Description
1		JM EAGLE – 2" IPS DR11, 3", 6", 18", 24" IPS DR17
1		CORE & MAIN – 6" IPS DR17 PERF PATTERN, 18" IPS DR17 PERF PATTERN
1		
1		
1		
1		
1		
1		
1		
1		
1		
1		
1		
1		
1		
1		

THESE ARE TRANSMITTED AS CHECKED BELOW:

☒ For approval ☐ Returned for corrections ☐ For Review and comment

☐ For your use ☐ As requested ☒ Return Corrected, Approved

REMARKS:
PLEASE FIND ENCLOSED SHOP DRAWING INFORMATION FOR APPROVAL.

SINCERELY,

ANDREW ELIJAH

2" IPS DR11 - ITEM 12
3" IPS DR17 - ITEM 13
6" IPS DR17 - ITEMS 8, 9, 11
18" IPS DR17 - ITEM 11
24" IPS DR17 - ITEM 44

JM Eagle *Building essentials for a better tomorrow™*

POLYETHYLENE WATER & SEWER

SUBMITTAL AND DATA SHEET

HDPE IRON PIPE SIZE (I.P.S.) PRESSURE PIPE

ANSI/NSF-61, 14 LISTED

PE 4710		DR 7 (335 psi)			DR 9 (250 psi)			DR 11 (200 psi)		
PE 3408/3608		DR 7 (265 psi)			DR 9 (200 psi)			DR 11 (160 psi)		
PIPE SIZE	AVG. O.D.	MIN. T.	AVG. I.D.	WEIGHT LB/FT	MIN. T.	AVG. I.D.	WEIGHT LB/FT	MIN. T.	AVG. I.D.	WEIGHT LB/FT
1/2	0.840	0.120	0.586	0.12	0.093	0.643	0.10	0.076	0.679	0.08
3/4	1.050	0.150	0.732	0.18	0.117	0.802	0.15	0.095	0.849	0.12
1	1.315	0.188	0.916	0.29	0.146	1.005	0.23	0.120	1.061	0.20
1-1/4	1.660	0.237	1.158	0.46	0.184	1.270	0.37	0.151	1.340	0.31
1-1/2	1.900	0.271	1.325	0.60	0.211	1.453	0.49	0.173	1.533	0.41
2	2.375	0.339	1.656	0.94	0.264	1.815	0.76	0.216	1.917	0.64
3	3.500	0.500	2.440	2.05	0.389	2.675	1.66	0.318	2.826	1.39
4	4.500	0.643	3.137	3.39	0.500	3.440	2.74	0.409	3.633	2.29
5-3/8	5.375	0.768	3.747	3.75	0.597	4.109	4.11	0.489	4.338	4.34
5	5.563	0.795	3.878	5.17	0.618	4.253	4.18	0.506	4.490	3.51
6	6.625	0.946	4.619	7.33	0.736	5.065	5.93	0.602	5.349	4.97
7	7.125	0.976	5.056	8.20	0.792	5.446	6.86	0.648	5.751	5.75
8	8.625	1.232	6.013	12.43	0.958	6.594	10.05	0.784	6.963	8.43
10	10.750	1.536	7.494	19.32	1.194	8.219	15.61	0.977	8.679	13.09
12	12.750	1.821	8.889	27.16	1.417	9.746	21.97	1.159	10.293	18.41
14	14.000	2.000	9.760	32.76	1.556	10.107	26.50	1.273	11.301	22.20
16	16.000	2.286	11.154	42.79	1.778	12.231	34.60	1.455	12.915	29.00
18	18.000	2.571	12.549	54.14	2.000	13.760	43.79	1.636	14.532	36.69
20	20.000	2.857	13.943	66.85	2.222	15.289	54.05	1.818	16.146	45.30
22	22.000	3.143	15.337	80.89	2.444	16.819	65.40	2.000	17.76	54.82
24	24.000	3.429	16.732	96.27	2.667	18.346	77.85	2.182	19.374	65.24
26	26.000	—	—	—	2.889	19.875	91.36	2.364	20.988	76.57
28	28.000	—	—	—	3.111	21.405	105.95	2.545	22.605	88.78
30	30.000	—	—	—	3.333	22.934	121.62	2.727	24.219	101.92
32	32.000	—	—	—	—	—	—	2.909	25.833	115.97
34	34.000	—	—	—	—	—	—	3.091	27.447	130.93
36	36.000	—	—	—	—	—	—	3.273	29.061	146.80

I.D. : Inside Diameter
O.D. : Outside Diameter
T. : Wall Thickness

* For data, sizes, or classes not reflected in these charts, please contact JM Eagle™ for assistance.

HDPE IRON PIPE SIZE (I.P.S.) PRESSURE PIPE (continued)

ANSI/NSF-61, 14 LISTED

PE 4710		DR 13.5 (160 psi)			DR 17 (125 psi)			DR 19 (112 psi)		
PE 3408/3608		DR 13.5 (128 psi)			DR 17 (100 psi)			DR 19 (90 psi)		
PIPE SIZE	AVG. O.D.	MIN. T.	AVG. I.D.	WEIGHT LB/FT	MIN. T.	AVG. I.D.	WEIGHT LB/FT	MIN. T.	AVG. I.D.	WEIGHT LB/FT
1/2	0.840	—	—	—	—	—	—	—	—	—
3/4	1.050	0.078	0.885	0.10	—	—	—	—	—	—
1	1.315	0.097	1.109	0.16	—	—	—	—	—	—
1-1/4	1.660	0.123	1.399	0.26	—	—	—	—	—	—
1-1/2	1.900	0.141	1.601	0.34	—	—	—	—	—	—
2	2.375	0.176	2.002	0.53	0.140	2.078	0.43	—	—	—
3	3.500	0.259	2.951	1.15	0.206	3.063	0.93	0.184	3.110	0.84
4	4.500	0.333	3.794	1.90	0.265	3.938	1.54	0.237	3.998	1.39
5-3/8	5.375	0.398	4.531	4.53	0.316	4.705	2.20	0.283	4.775	1.98
5	5.563	0.412	4.690	2.91	0.327	4.870	2.35	0.293	4.942	2.12
6	6.625	0.491	5.584	4.13	0.390	5.798	3.34	0.349	5.885	3.01
7	7.125	0.528	6.006	4.78	0.419	6.237	3.86	0.375	6.330	3.48
8	8.625	0.639	7.270	7.00	0.507	7.550	5.65	0.454	7.663	5.10
10	10.750	0.796	9.062	10.87	0.632	9.410	8.87	0.566	9.550	7.92
12	12.750	0.944	10.749	15.29	0.750	11.160	12.36	0.671	11.327	11.14
14	14.000	1.037	11.802	18.45	0.824	12.253	14.91	0.737	12.438	13.43
16	16.000	1.185	13.488	24.09	0.941	14.005	19.46	0.842	14.215	17.54
18	18.000	1.333	15.174	30.48	1.059	15.755	24.64	0.947	15.992	22.20
20	20.000	1.481	16.860	37.63	1.176	17.507	30.41	1.053	17.768	27.41
22	22.000	1.630	18.544	45.56	1.294	19.257	36.80	1.158	19.545	33.16
24	24.000	1.778	20.231	54.21	1.412	21.007	43.81	1.263	21.322	39.47
26	26.000	1.926	21.917	63.62	1.529	22.759	51.39	1.368	23.100	46.32
28	28.000	2.074	23.603	73.78	1.647	24.508	59.62	1.474	24.875	53.72
30	30.000	2.222	25.289	84.69	1.765	26.258	68.45	1.579	26.653	61.66
32	32.000	2.370	26.976	96.35	1.882	28.010	77.86	1.684	28.430	70.16
34	34.000	2.519	28.660	108.81	2.000	29.760	87.91	1.790	30.205	79.20
36	36.000	2.667	30.346	121.98	2.118	31.510	98.57	1.895	31.983	88.80
42	42.000	—	—	—	2.471	36.761	134.16	2.211	37.314	120.86
48	48.000	—	—	—	2.824	42.013	175.23	2.526	42.644	157.86
54	54.000	—	—	—	3.177	47.265	221.71	2.842	47.975	199.79
63	63.000	—	—	—	—	—	—	—	—	—

* For data, sizes, or classes not reflected in these charts, please contact JM Eagle™ for assistance.

JM Eagle *Building essentials for a better tomorrow™*

POLYETHYLENE WATER & SEWER

SUBMITTAL AND DATA SHEET

REFERENCE STANDARDS

ASTM D638	Standard Test Method for Tensile Properties of Plastics
ASTM D746	Standard Test Method for Brittleness Temperature of Plastics and Elastomers by Impact
ASTM D790	Standard Test Methods for Flexural Properties of Unreinforced and Reinforced Plastics and Electrical Insulation Materials
ASTM D1238	Standard Test Method for Melt Flow Rates of Thermoplastics by Extrusion Plastometer
ASTM D1505	Standard Test Method for Density of Plastics by the Density-Gradient Technique
ASTM D2239	Standard Specification for Polyethylene (PE) Plastic Pipe (S.I.D.R.-PR) Based on Controlled Inside Diameter
ASTM D2657	Standard Practice for Heat Fusion Joining of Polyolefin Pipe and Fittings
ASTM D2737	Standard Specification for Polyethylene (PE) Plastic Tubing
ASTM D2774	Standard Practice for Underground Installation of Thermoplastic Pressure Piping
ASTM D2837	Standard Test Method for Obtaining Hydrostatic Design Basis for Thermoplastic Pipe Materials
ASTM D3035	Standard Specifications for Polyethylene (PE) Plastic Pipe (DR-PR) Based on Controlled Outside Diameter
ASTM D3350	Standard Specification for Polyethylene Plastic Pipe and Fittings Material
ASTM F412	Standard Terminology Relating to Plastic Piping Systems
ASTM F714	Standard Specification for Polyethylene (PE) Plastic Pipe (S.D.R.-PR) Based on Outside Diameter
ASTM F1473	Standard Test Method for Notch Tensile to Measure the Resistance to Slow Crack Growth of Polyethylene Pipes and Resins
AWWA C901	Polyethylene (PE) Pressure Pipe and Tubing, 1/2 in. Through 3 in. For Water Service
AWWA C906	Polyethylene (PE) Pressure Pipe and Fittings, 4 in. Through 63 in., For Water Distribution and Transmission
NSF Standard 014	Plastics Piping System Components and Related Materials
NSF Standard 061	Drinking Water System Components - Health Effects

PERFORATED PIPE APPROVAL FORM

Customer Name: JB Holland

Project Name: Ames Ash Pond

Sales Order # : Item #8 Ash Water Collection

Pipe Size: 6" IPS

Pipe SDR: DR17

Pipe Quantity: 1240'

Style: Style F

Rows: 4 Rows

Deg Apart: 90 DEG

Hole Size: 5/8"

On Center: 6" Spacing

3" Stagger

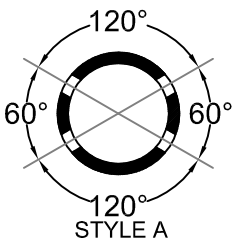

STYLE A

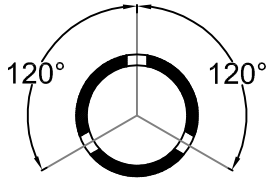

STYLE B

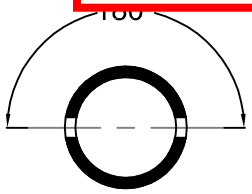
STYLE C

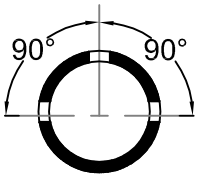

STYLE D

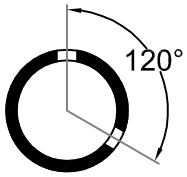

STYLE E

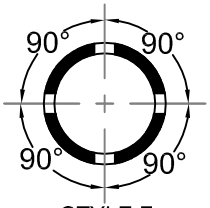

STYLE F

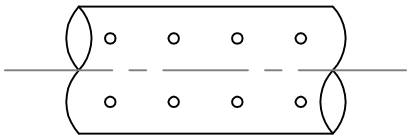
NON STAGGERED

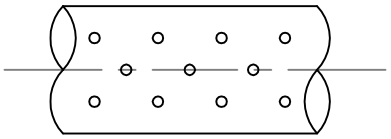
STAGGERED

Custom Pattern:

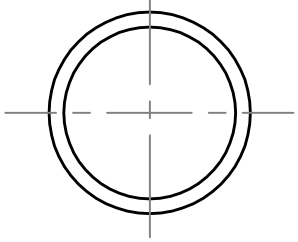

Approval Signature: _____ Date: _____

PERFORATED PIPE APPROVAL FORM

Customer Name: JB Holland

Project Name: Ames Ash Pond

Sales Order # : Item #11 Ash Water Riser Pipe & Sump Pipe

Pipe Size: 6" IPS

Pipe SDR: DR17

Pipe Quantity: 40'

Style: Stagger

Rows: 4 Rows

Deg Apart: 90 DEG

Hole Size: 5/8"

On Center: 6" Spacing
3" Stagger

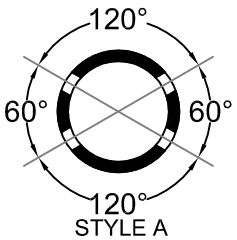

STYLE A

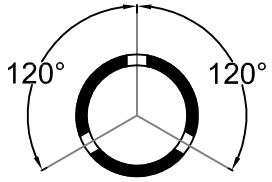

STYLE B

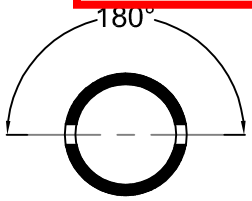

STYLE C

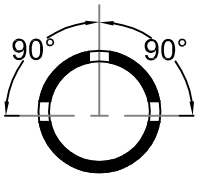

STYLE D

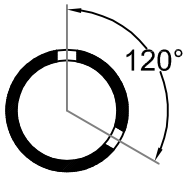

STYLE E

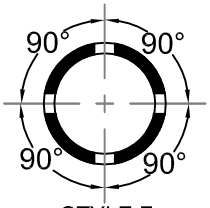

STYLE F

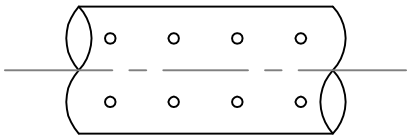
NON STAGGERED

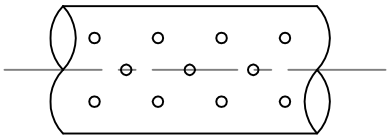
STAGGERED

Custom Pattern:

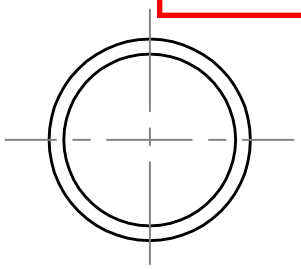

Approval Signature: _____ Date: _____

PERFORATED PIPE APPROVAL FORM

Customer Name: JB Holland

Project Name: Ames Ash Pond

Sales Order # : Item #11 Ash Water Riser Pipe & Sump Pipe

Pipe Size: 18" IPS

Pipe SDR: DR17

Pipe Quantity: 40'

Style: Style F

Rows: 4 Rows

Deg Apart: 90 DEG

Hole Size: 5/8"

On Center: 6" Spacing
3" Stagger

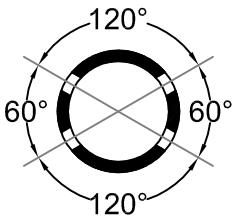

STYLE A

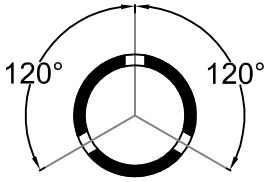

STYLE B

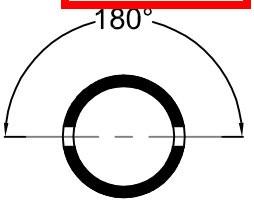

STYLE C

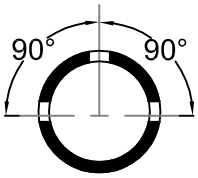

STYLE D

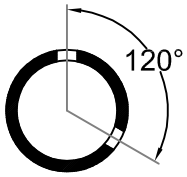

STYLE E

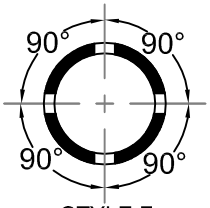

STYLE F

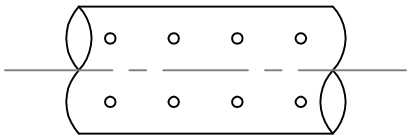
NON STAGGERED

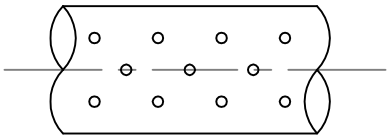
STAGGERED

Custom Pattern:

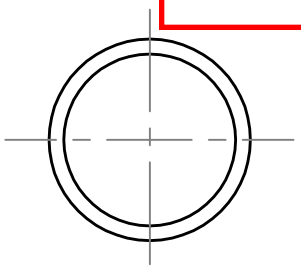

Approval Signature: _____ Date: _____

Project: City of Ames Ash Pond Closure
SCS Project #: 27219356.02

Section: 33 11 10
Title: Submittal #S2A – Contact Water Vault and Forcemain Piping, and Stormwater Piping

Submittal Review

- [X] Conforms as submitted
- [ ] Conforms as noted – Resubmittal is:
  - [ ] Not required
  - [ ] Required
  - [ ] Noted portions only
  - [ ] For record only
- [ ] Does not conform
- [ ] Not required by contract documents
- [ ] For information only

Corrections or comments made on submittals during this review do not relieve the contractor from compliance with requirements of the drawings and specifications. This check is only for review of general conformance with the design concept of the project and general compliance with the information given in the contract documents. The contractor is responsible for; confirming and correlating all quantities and dimensions; selecting fabrication processes and techniques of construction; coordinating contractor's work with that of all other trades; and performing contractor's work in a safe and satisfactory manner.

Comments:

Reviewed By: Matt Kuhlenengel	Date: 6/3/2024
SCS QC Review By: Marty Sturzl	Date: 6/3/2024

G:\Project\27219356.02\Data and Calculations\Submittals\S2 - Vault, Forcemain, and Stromwater Piping\SCS Review S2A-Vault, Forcemain, and Stormwater Piping_240603_.docx

SHOP DRAWING TRANSMITTAL

DATE: 5/28/2024

Project: Ames Ash Pond Closure & RDF Ash Pond Construction

Specification Section Number: 33 11 10

Transmittal Number: S2

1st Submittal _____ or Resubmital ___A____

Contract Item	Description of Material	Manufacturer	Drawing or Data No.	Action Taken
	Electrofusion Couplers as needed	Integrity		
	HDPE fittings as needed	Integrity		
	SCH 40 Fittings as needed	Spears		
	EPDM Gaskets	Tripac		
44	Marmac couplers	ADS		
44	24" N12	ADS		
12,13	Gate Valve 2"	ASAHI		
12,13	Ball Valve 2"	ASAHI		
13	Tracer Wire	Kris - Tech		
12,13	Pit less Adapter	Boshart		
12	Hatch	Halliday		
	Additional Items added from previous submittal			
12	2" sch 40 PVC	JM Eagle		
41	4" ADS perf rolls	ADS		
12	2" vent	Watermain		
12	1/2" SS Ball Valve	Landsdale		
12	21/2" Pressure gauge	Sealfast		
	Flow meter provided under submittals from Electric pump (contact water pumping system)			

As stated in the Contract Documents, the undersigned CONTRACTOR's submission of these Shop Drawings or samples shall constitute a representative to the OWNER and the ENGINEER that the CONTRACTOR has either determined and verified all quantities, dimensions, field construction criteria, materials, catalogue numbers and similar data or he assumes full responsibility for doing so, and that he has reviewed and coordinated each Shop Drawing or sample with the requirements of the work and the Contract Documents and he represents to the OWNER and the ENGINEER that item(s) described by these Shop Drawings do comply with the requirements of the Contract Documents. The undersigned Contractor certifies that the equipment included in this submittal complies with the latest requirements of the Occupational Health and Safety Act of 1970 including any standards or regulations established by the U.S. Secretary of Labor in administration of said act, and the Iowa Occupational Safety and Health Statutes.

4/3/2024

(Autorized Signature of Contractor) **(Date)**

JB Holland Construction, Inc.

2191 State Hwy 52, Decorah, IA 52101

Supplier/Subcontractor:

Core & Main

2355 16th Ave SW

Cedar Rapids, IA 52404

319-362-1698

FOR ENGINEER'S USE

n as designated above in accordance with the following legend:

A- No Exception Taken

B- Make Corrections Noted & Resubmit

C- Revise & Resubmit

D- Rejected

E- Submit Specified Item

BY: _____

DATE: _____

LETTER OF TRANSMITTAL

To: JB HOLLAND
Regarding: AMES ASH POND
Location: AMES, IA
Date: 5/3/2024

2355 16TH AVE SW
CEDAR RAPIDS, IA 52404
PHONE: (319) 362-1698
FAX: (319) 362-3078

WE ARE SENDING YOU:

☒ Shop Drawings ☐ Prints ☐ Plans ☐ Samples ☐ Specifications

☐ Copy of Letter ☐ Attached ☐ Other

Copies	Number	Description
1		JM EAGLE – 2" SCH40 PVC
1		ADS – 4" ADS CORRUGATED PERF ROLLS 100'
1		WATERMAN – 2" FIPT AV-150 VENT
1		LANSDALE VALVE – ½" SS BALL VALVE (SAMPLE PORT)
1		
1		
1		
1		
1		
1		
1		
1		
1		
1		
1		
1		

THESE ARE TRANSMITTED AS CHECKED BELOW:

☒ For approval ☐ Returned for corrections ☐ For Review and comment

☐ For your use ☐ As requested ☒ Return Corrected, Approved

REMARKS:
PLEASE FIND ENCLOSED SHOP DRAWING INFORMATION FOR APPROVAL.

SINCERELY,

ANDREW ELIJAH

2" SCH40 PVC

SCH40 PVC pipe as needed

SOLVENT WELD

SUBMITTAL AND DATA SHEET

JM Eagle *Building essentials for a better tomorrow™*

PVC SOLVENT WELD - (SCHEDULE SERIES)

Dual marking for both Pressure and Drain, Waste, Vent (DWV) Applications

JM EAGLE™ PVC SCHEDULE 40/DWV PIPE

Specifications: ASTM D1785 & ASTM D2665 : :

Listed : ANSI/NSF-PW NSF-DWV Standard 61, Standard 14

NOM. PIPE SIZE (IN)	O.D. (IN)	NOM. I.D. (IN)	MIN. T. (IN)	WATER PRESSURE RATING AT 23˚C (73˚F)	APPROX. WEIGHT (LBS/FT)
1/2	0.840	0.609	0.109	600	0.164
3/4	1.050	0.810	0.113	480	0.218
1	1.315	1.033	0.133	450	0.324
1-1/4	1.660	1.363	0.140	370	0.439
1-1/2	1.900	1.593	0.145	330	0.525
2	2.375	2.049	0.154	280	0.705
2-1/2	2.875	2.445	0.203	300	1.118
3	3.500	3.042	0.216	260	1.463
4	4.500	3.998	0.237	220	2.083
6	6.625	6.031	0.280	180	3.663
8	8.625	7.942	0.322	160	5.512
10	10.750	9.976	0.365	140	7.815
12	12.750	11.889	0.406	130	10.333
14	14.000	13.073	0.437	130	12.220
16	16.000	14.940	0.500	130	15.980

: : Standard Color: White, Standard Length ~~10' &~~ 20', ~~Plain End and~~ Belled End

4" ADS Corrugated Perf

Corr SW fittings and perforated pipe for longitudinal subdrain, 4"

ADS SINGLE WALL HIGHWAY PIPE SPECIFICATION

Scope

This specification describes 3- through 24-inch (75 to 600 mm) single wall high density corrugated polyethylene highway pipe, for drainage applications.

Pipe Requirements

ADS single wall corrugated highway pipe shall have annular interior and exterior corrugations.

- 3- through 10-inch (75 to 250 mm) shall meet AASHTO M252, Type C.
- 12- through 24-inch (300 to 600 mm) shall meet AASHTO M294, Type C.

Joint Performance

Joints for 3- to 24- inch (75 – 600 mm) shall be made with split or snap couplings. Standard connection shall meet the soil-tightness requirements of AASHTO M252 or M294. Gasketed connections shall incorporate a closed-cell synthetic expanded rubber gasket meeting the requirements of ASTM D1056 Grade 2A2. Gaskets, when applicable, shall be installed by the pipe manufacturer.

Fittings

Fittings shall conform to AASHTO M252 or AASHTO M294.

Material Properties

Pipe and fittings shall be made of virgin polyethylene compounds that comply with the cell classification 424420C for 4- through 10-inch (100 to 250mm) diameters, or 435400C for 12- through 60-inch (300 to 1500mm) diameters, as defined and described in ASTM D3350, except that carbon black content should not exceed 5%. The 12- through 60-inch (300 to 1500mm) virgin pipe material shall comply with the notched constant ligament-stress (NCLS) test as specified in Section 9.5 of AASHTO M294.

Installation

Installation shall be in accordance with ASTM D2321 and ADS's published installation guidelines with the exception that minimum cover in trafficked areas shall be one foot (0.3 m). Contact your local ADS representative or visit our website at www.ads-pipe.com for a copy of the latest installation guidelines.

Pipe Dimensions

Nominal Diameter, in (mm)										
Pipe I.D. in (mm)	3 (75)	4 (100)	5 (125)	6 (150)	8 (200)	10 (250)	12 (300)	15 (375)	18 (450)	24 (600)
Pipe O.D.* in (mm)	3.6 (91)	4.6 (117)	5.8 (147)	7 (178)	9.5 (241)	12 (305)	14.5 (368)	18 (457)	21 (533)	28 (711)
Perforations	All diameters available with or without perforations.									

*Pipe O.D. values are provided for reference purposes only, values stated for 3- through 24-inch are ± 0.5 inch. Contact a sales representative for exact values.

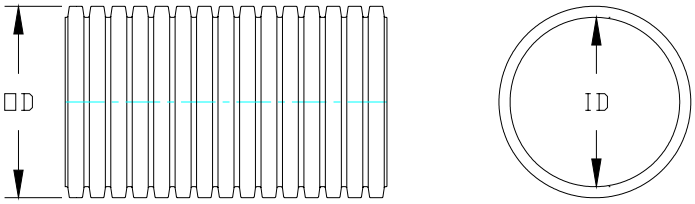

© ADS, Inc., February 2007

AV-150 AIR VENT

AND VACUUM RELIEF VALVE

USES:

Waterman Model AV-150 Air Vents are designed for evacuation of air when filling a pipe line and provide positive vacuum relief when pipe is draining.
Use on gravity or higher pressure systems.

FEATURES:

The Model AV-150 uses a semi-hard, precision ground, inert solid plastic float ball. The float seats against a precision "o-ring" providing a tight seal at very low pressures where other vents often leak. They have excellent seating characteristics and operate trouble-free at pressures up to 150 psi on the 1½" and 2" units and 100 psi on the 3" and 4" units.

The aerodynamic "air-flow" design of a high strength alloy aluminum body and full baffle assures maximum vent capacity without premature closing. Material selection prevents "sticking" in the closed position.

Units are furnished with standard female pipe threads which should be protected with "Never-Seize" or equivalent when installed.

VENT CAPACITY = INLET SIZE
VACUUM RELIEF CAPACITY = CLEAR OPENING SIZE

1½" INLET	= 1⅛" dia. clear opening
2" INLET	= 1¾" dia. clear opening
3" INLET	= 2⅜" dia. clear opening
4" INLET	= 3½" dia. clear opening



MODEL AV-150

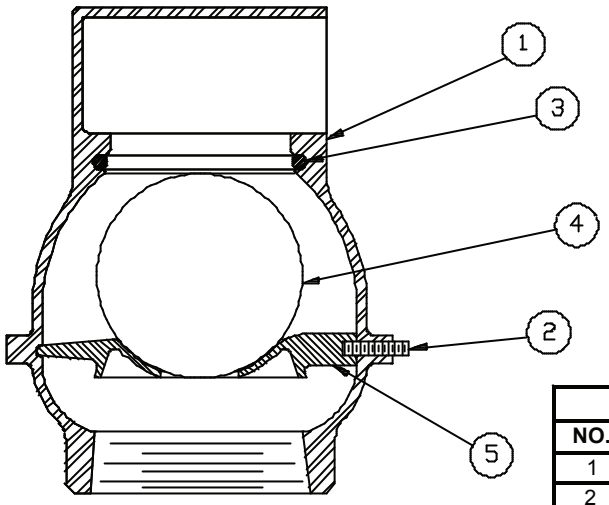

PARTS LIST	
NO.	NAME
1	Body
2	Set Screw
3	O-Ring
4	Float Ball
5	Baffle

DISCHARGE CURVES

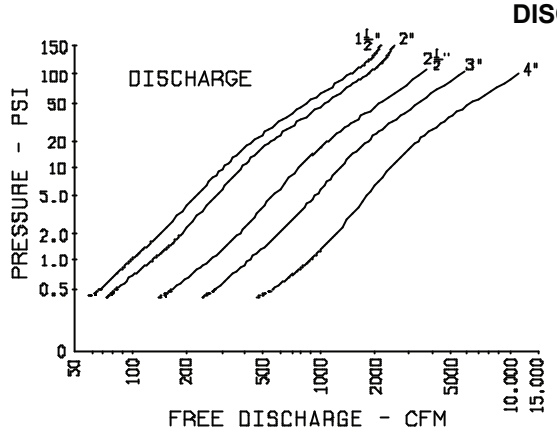

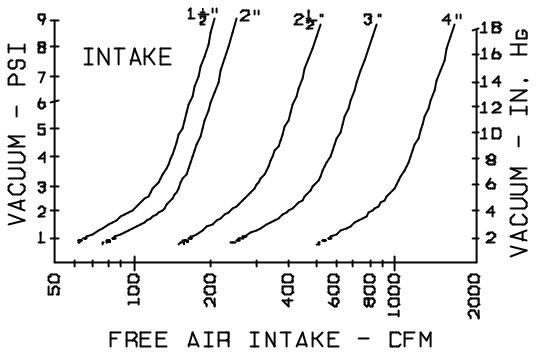

1/2" Ball Valve for Sample Port

LANSDALE® VALVE MANUFACTURING CORP.

2 PC 316SS FULL PORT BALL VALVE

MODEL LVSS2BV



FEATURES:

- **Threaded:** NPT
- **Materials:** SS316
- Working Pressure 1000 PSI for WOG
- Adjustable stem packing
- Pure teflon seals and seats
- Temperature range: -60 to 450°F
- Blow-out proof stem and safe pressure-reducing hole
- 100% leakage tested at 100 PSI air under water
- Hydrostatic test pressure 1500 PSI
- **Size:** 1/4"- 4" Full Port/Bore (1000) PSI

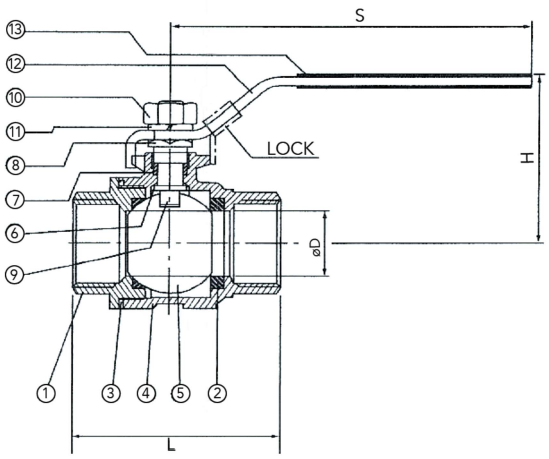

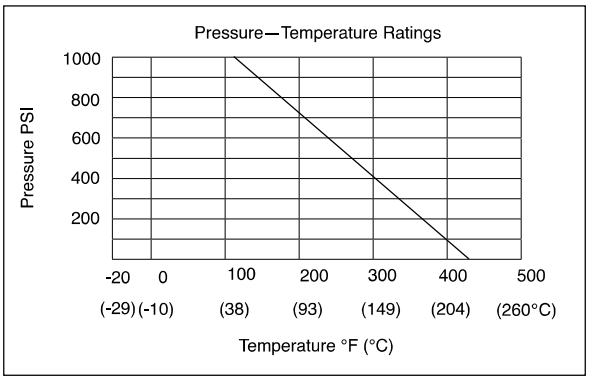

No.	NAME	MATERIAL	QTY
1	Cap	316	1
2	Ball Seat	PTFE	2
3	Joint Gasket	PTFE	1
4	Body	316	1
5	Ball	316	1
6	Thrust Washer	PTFE	1
7	Stem Packing	PTFE	1
8	Gland Nut	304	1
9	Stem	316	1
10	Stem Nut	304	1
11	Spring Washer	304	1
12	Handle	304	1
13	Plastic Sleeve	PVC	1

Size (In.)	D	L	H	S
1/4	12.7	47.3	46.6	99.5
3/8	12.7	47.3	46.6	99.5
1/2	15.0	58.2	48.2	99.5
3/4	20.0	65.5	61.7	126.5
1	25.0	76.5	69.3	126.5
1-1/4	32.0	90.0	80.7	153.0
1-1/2	38.0	98.3	87.2	153.0
2	50.8	121.7	95.4	192.0
2-1/2	65.0	145.2	119.5	248.0
3	76.0	167.0	130.0	248.0
4	100.0	224.0	167.2	320.0

PROJECT	APPROVAL STAMP
PROJECT:	☐ APPROVED
ADDRESS:	☐ APPROVED AS NOTED
ENGINEER:	☐ NOT APPROVED
SUBMITTAL DATA:	REMARKS:
NOTES 1:	
NOTES 2:	

LETTER OF TRANSMITTAL

2355 16TH AVE SW
CEDAR RAPIDS, IA 52404
PHONE: (319) 362-1698
FAX: (319) 362-3078

To: JB HOLLAND
Regarding: AMES ASH POND
Location: AMES, IA
, IA
Date: 5/6/2024

WE ARE SENDING YOU:

☒ Shop Drawings ☐ Prints ☐ Plans ☐ Samples ☐ Specifications

☐ Copy of Letter ☐ Attached ☐ Other

Copies	Number	Description
1		SEALFAST – 2-1/2"x ¼" Pressure Gauge
1		
1		
1		
1		
1		
1		
1		
1		
1		
1		
1		
1		
1		
1		
1		

THESE ARE TRANSMITTED AS CHECKED BELOW:

☒ For approval ☐ Returned for corrections ☐ For Review and comment

☐ For your use ☐ As requested ☒ Return Corrected, Approved

REMARKS:
PLEASE FIND ENCLOSED SHOP DRAWING INFORMATION FOR APPROVAL.

SINCERELY,

ANDREW ELIJAH

2-1/2"x1/4" Pressure Gauge

SEALFAST
THE SIMPLE SOLUTION

GAUGES



GAUGES - LIQUID
2-1/2" X 1/4" MOUNT - SS CASE / SS INTERNALS

FEATURES & APPLICATIONS:

• Used in hydraulic and pneumatic systems, compressors, regulator machine, and suitable for fluid medium or gaseous which does not clog connection port or corrode stainless steel. Can use for severe service conditions where pulsation or vibration exist. Premium quality and long life.

Case Venting: Liquid filled gauges should be vented to atomosphere to relief internal case pressure prior to use.You can easliy do this by turning the valve lever on the back of the gauage to the open position. Liquid-Fill gauges are typically shipped with the valve in the closed position.



LM
Lower mount



UC
U-Clamp

TECHNICAL DATA:

- **CASE: Stainless Steel 316 SS**
- **WINDOW: Glass**
- **INTERNAL: Stainless Steel 304 SS**
- **CONNECTION: Stainless Steel 316 SS**
- **ACCURACY: ± 1.6% of full scale**
- **TEMPERATURE RANGE: -4°F to 140°F**

ALL STAINLESS STEEL

Face Size	Mount	PSI	Part #	Part #
2-1/2"	1/4" NPT		LM	UC
		Vacuum 0-30" Hg	G25301PSSV	G25302PSSUV
		30 psi x 30" Hg Vac	G2530301PSS	---
		15 psi / 103 kpa	G25151PSS	G25152PSSU
		30 psi / 200 kpa	G25301PSS	G25302PSSU
		60 psi / 400 kpa	G25601PSS	G25602PSSU
		100 psi / 700 kpa	G251001PSS	G251002PSSU
		160 psi / 1,100 kpa	G251601PSS	G251602PSSU
		200psi / 1,400 kpa	G252001PSS	G252002PSSU
		300 psi / 2,100 kpa	G253001PSS	G253002PSSU
		400 psi / 2,800 kpa	---	G254002PSSU
		600 psi / 4,000 kpa	G256001PSS	G256002PSSU
		1,000 psi / 7,000 kpa	G2510001PSS	G2510002PSSU
		1,500 psi / 10,000 kpa	G2515001PSS	---
		2,000 psi / 14,000 kpa	G2520001PSS	G2520002PSSU
		3,000 psi / 21,000 kpa	G2530001PSS	G2530002PSSU
		4,000 psi / 28,000 kpa	G2540001PSS	---
		5,000 psi / 35,000 kpa	G2550001PSS	G2550002PSSU
		6,000 psi / 42,000 kpa	G2560001PSS	---
		10,000 psi / 70,000 kpa	G25100001PSS	G25100002PSSU

2-1/2"

Information contained on this page is for general information purposes only. Seal Fast Inc. assumes no responsibility for errors or omissions for this product.

sales@Seal Fast.com 800.231.0734 Seal Fast.com 5603 Harvey Wilson Drive, Houston, TX 77020

Project: City of Ames Ash Pond Closure
SCS Project #: 27219356.02

Section: 33 11 00
Title: Submittal #S2 – Contact Water Vault and Forcemain Piping, and Stormwater Piping

Submittal Review

- [ ] Conforms as submitted
- [X] Conforms as noted – Resubmittal is:
  - [ ] Not required
  - [X] Required
  - [ ] Noted portions only
  - [ ] For record only
- [ ] Does not conform
- [ ] Not required by contract documents
- [ ] For information only

Corrections or comments made on submittals during this review do not relieve the contractor from compliance with requirements of the drawings and specifications. This check is only for review of general conformance with the design concept of the project and general compliance with the information given in the contract documents. The contractor is responsible for; confirming and correlating all quantities and dimensions; selecting fabrication processes and techniques of construction; coordinating contractor's work with that of all other trades; and performing contractor's work in a safe and satisfactory manner.

Comments:

- Missing PVC pipe cut sheet.
- Missing the Toe Drain pipe. Please add or confirm that this will be submitted separately.
- Missing vacuum relief valve, pressure gauge, flow meter, and sample port, please add or confirm that these will be submitted separately.
- Missing Complete Vault Pipe Layout Shop Drawing. Not necessary to submit, Contractor is responsible for verifying dimension of all fittings within vault and confirming there are no conflicts.

Reviewed By: Matt Kuhlenengel	Date: 4/24/2024
SCS QC Review By: Marty Sturzl	Date: 4/25/2024

G:\Project\27219356.02\Data and Calculations\Submittals\S2 - Vault, Forcemain, and Stromwater Piping\SCS Review S2-Vault, Forcemain, and Stormwater Piping_240424_.docx

SHOP DRAWING TRANSMITTAL

DATE: 4/3/2024

Project: Ames Ash Pond Closure & RDF Ash Pond Construction

Specification Section Number: 33 11 10

Transmittal Number: S2

1st Submittal X or Resubmital ____

Contract Item	Description of Material	Manufacturer	Drawing or Data No.	Action Taken
	Electrofusion Couplers as needed	Integrity		
	HDPE fittings as needed	Integrity		
	SCH 40 Fittings as needed	Spears		
	EPDM Gaskets	Tripac		
44	Marmac couplers	ADS		
44	24" N12	ADS		
12,13	Gate Valve 2"	ASAHI		
12,13	Ball Valve 2"	ASAHI		
13	Tracer Wire	Kris - Tech		
12,13	Pit less Adapter	Boshart		
12	Hatch	Halliday		

As stated in the Contract Documents, the undersigned CONTRACTOR's submission of these Shop Drawings or samples shall constitute a representative to the OWNER and the ENGINEER that the CONTRACTOR has either determined and verified all quantities, dimensions, field construction criteria, materials, catalogue numbers and similar data or he assumes full responsibility for doing so, and that he has reviewed and coordinated each Shop Drawing or sample with the requirements of the work and the Contract Documents and he represents to the OWNER and the ENGINEER that item(s) described by these Shop Drawings do comply with the requirements of the Contract Documents. The undersigned Contractor certifies that the equipment included in this submittal complies with the latest requirements of the Occupational Health and Safety Act of 1970 including any standards or regulations established by the U.S. Secretary of Labor in administration of said act, and the Iowa Occupational Safety and Health Statutes.

4/3/2024

Supplier/Subcontractor:
Core & Main
2355 16th Ave SW
Cedar Rapids, IA 52404
319-362-1698

(Autorized Signature of Contractor) **(Date)**

JB Holland Construction, Inc.

2191 State Hwy 52, Decorah, IA 52101

FOR ENGINEER'S USE

n as designated above in accordance with the following legend:

A- No Exception Taken
B- Make Corrections Noted & Resubmit
C- Revise & Resubmit
D- Rejected
E- Submit Specified Item

BY: _____

DATE: _____

LETTER OF TRANSMITTAL

To: JB HOLLAND
Regarding: Ames Ash Pond
Location: AMES, IA
Date: 3/29/2024

2355 16TH AVE SW
CEDAR RAPIDS, IA 52404
PHONE: (319) 362-1698
FAX: (319) 362-3078

WE ARE SENDING YOU:

☒ Shop Drawings ☐ Prints ☐ Plans ☐ Samples ☐ Specifications

☐ Copy of Letter ☐ Attached ☐ Other

Copies	Number	Description
~~1~~		~~JM EAGLE – 2" IPS DR11, 3", 6", 18", 24" IPS DR17~~
~~1~~		~~CORE & MAIN – 6" IPS DR17 PERF PATTERN, 18" IPS DR17 PERF PATTERN~~
1		INTEGRITY – EF COUPLERS, HDPE FITTINGS, BACKING RINGS
1		SPEARS – SCH40 FITTINGS
1		TRIPAC – EPDM GASKETS
1		ADS – MARMAC COUPLER, ADS SOLID
1		ASAHI – GATE VALVE, BALL VALVE
1		KRIS-TECH – TRACER WIRE, GREEN
1		BOSHART – PITLESS ADAPTER
1		HALIDAY HATCH – S2S7248
1		
1		
1		
1		
1		

THESE ARE TRANSMITTED AS CHECKED BELOW:

☒ For approval ☐ Returned for corrections ☐ For Review and comment

☐ For your use ☐ As requested ☒ Return Corrected, Approved

REMARKS:
PLEASE FIND ENCLOSED SHOP DRAWING INFORMATION FOR APPROVAL.

SINCERELY,

ANDREW ELIJAH

EF Couplings as needed

MOLDED
Makes

Since 2007 Integrity Fusion Products have been known for their impressive product line of Electrofusion fittings. We continue to grow and innovate more products than ever before!

The IntegriFuse Difference:

- Large Diameter Electrofusion Couplers Improved technology eliminating the need for pre-heating procedures
- Utilizes higher Amperage (105A) to create more heat, allowing the pipe to expand to help reduce any gaps between pipe and coupler
- Higher amperage allows for larger gaps to start fusion process
- Higher amperage also results in deeper melt penetration
- Wider fusion zones for increased surface melt
- Wider cold zones allowing for more flexibility in pipe stab depth
- fittings created with traceability bar codes
- All couplers through 54" are injection molded (not fabricated out of pipe or billet as other brands)
- Pop up melt indicators
- Cooling time listed on coupler indicates when the fitting joint can be fully pressure tested, eliminating the need for guesswork
- Backed by 30+ years of experience in designing, developing and producing electrofusion fittings & equipment with strict quality management standards
- FM Approved
- AWWA C906 NSF/ANSI 61
- Manufactured in accordance to ASTM 1055

*All IntegriFuse Electrofusion fittings must be installed by a qualified and experienced technician.



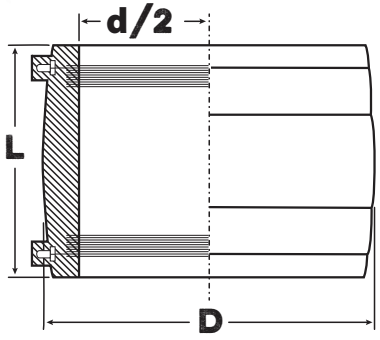



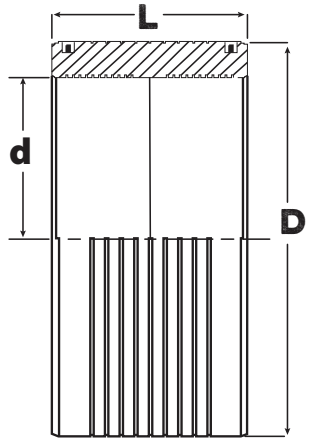

INTEGRIFUSE SDR 11 IPS ELECTROFUSION COUPLERS

Water 200 PSI(ASTM / 232 PSI (ISO) - Gas 100 PSI @73° F Sustainable Operating Pressure

Suitable for use on IPS SDR 9* to SDR 17 HDPE Pipe. Manufactured from material made from PE3408 / PE4710 / PE100 resin that complies with ASTM D3350. Fusing to SDR 21 to SDR 32.5 may require special barcode.

NOMINAL SIZE	d/2 - ID	D	L	WEIGHT	ITEM CODE	NOTES
1"IPS	1.315"	1.7"	3.4"	0.1 lbs.	200302	
1 ¼" IPS	1.660"	2.2"	3.7"	0.2 lbs.	200303	
1 ½" IPS	1.900"	2.7"	3.9"	0.4 lbs.	200304	
2" IPS	2.375"	3.2"	4.6"	0.5 lbs.	200305	
3" IPS	3.500"	4.4"	5.0"	0.9 lbs.	200307	FM 200 / FM 232
4" IPS	4.500"	5.9"	5.9"	1.7 lbs.	200310	FM 200 / FM 232
5" IPS	5.563"	6.9"	6.5"	2.5 lbs.	200312	FM 200 / FM 232
6" IPS	6.625"	8.7"	7.9"	4.6 lbs.	200314	FM 200 / FM 232
8" IPS	8.625"	10.7"	8.9"	8.4 lbs.	200317	FM 200 / FM 232
10" IPS	10.750"	13.3"	9.8"	14.9 lbs.	200320	FM 200 / FM 232
12" IPS	12.750"	15.9"	11.4"	24.5 lbs.	200323	FM 200 / FM 232
14" IPS	14.000"	17.2"	11.8"	27.0 lbs.	200326	FM 200 / FM 232
16" IPS	16.000"	19.8"	13.9"	32.0 lbs.	200329	FM 200 / FM 232
18" IPS (1)	18.000"	22.3"	16.7"	75.0 lbs.	200332	FM 200 / FM 232
20" IPS (1)	20.000"	24.8"	18.0"	97.0 lbs.	200335	FM 200 / FM 232
22" IPS (1)	22.000"	27.4"	19.5"	123.0 lbs.	200336	FM 200 / FM 232
24" IPS (1)	24.000"	30.6"	19.8"	157.0 lbs.	200338	FM 200 / FM 232

(1) Dual fusion zones (2) Requires the I Fuse 105 EF Processor for fusion

* Coupler can be fused to SDR 9 pipe, but is only pressure rated to SDR 11. Not to be used in SDR 9 fully pressure rated applications

Integrity Fusion Products, Inc.
270 Parkade Court . Peachtree City, GA 30269
P: 1-888-770-6330 • P: 770-632-7530 • F: 770-632-7540
E: Info@IntegrityFusion.com

INTEGRITY Fusion Products, Inc.

HDPE Fittings as needed

INTEGRITY Fusion Products, Inc.

270 Parkade Court, Peachtree City, GA 30269 - (P) 1.888.770.6330 - www.integrityfusion.com

PRODUCT SPECIFICATIONS SHEET

MOLDED HDPE FITTINGS

PE3408 / PE4710 /PE100 HDPE BLACK

MATERIAL:

IntegriFuse fittings are manufactured with pre-blended black high density bimodal polyethylene copolymer resin recognized by the Plastic Pipe Institute as having a PE3408 / PE4710 / PE100 rating and a Hydrostatic Design Basis of 1600 psi @ 73°F. This resin has a cell classification of 445574C in accordance with ASTM D3350. IntegriFuse fittings are designed for use in, but not limited to, potable water, natural gas, industrial, landfill, oil & gas, mining, & irrigation applications.

REQUIREMENTS:

ASTM D2513	- Specification for Thermoplastic Gas Pressure Pipe, Tubing, and Fittings
ASTM D3350	- Specification for Polyethylene Plastic Pipes and Fittings Materials
ASTM D3261	- Specification for Butt Heat Fusion Polyethylene (PE) Plastic Fittings for Polyethylene (PE) Plastics Pipe and Tubing
ASTM F2880	- Specification for Lap-Joint type Flange Adapters for use on Polyethylene Pressure Pipe
ASTM F714	- Specification for HDPE Pipe Dimensions
ASTM F1055	- Specification for Electrofusion Fittings

REFERENCE DOCUMENTS:

PPI TR-19	- Thermoplastics Piping for the Transport of Chemicals
PPI TR-31	- Underground Installation of Polyolefin Pipe
PPI TR-33	- Generic Butt Fusion Procedure for Polyethylene Gas Pipe
PPI TR-4	- Standard Practice for Hydrostatic Design Basis for Polyethylene Pipe
ASTM D2657	- Standard Practice for Heat Fusion Joining of Polyolefin Pipe and Fittings

CERTIFICATIONS/LISTINGS:

FM 1613	- Approval Standard: Plastic Pipe and Fittings for Underground Fire Protection Service
AWWA C901/C906	- Standard for Polyethylene Pressure Pipe and Fittings for Water Distribution
ANSI/NSF 61&372	- Plastic Piping System Components & Related Materials(NSF 61) & Brass Components(NSF372)

TEST METHODS:

ASTM D1598 — Time-to-Failure of Plastic Pipe Under Constant Internal Pressure.
Must exceed 170 hours in 80°C bath @ 670psi Hoop Stress, or
Must exceed 1000 hours in 80°C bath @ 580psi Hoop Stress, or Must exceed 1000 hours in 23°C bath @ 1600psi Hoop Stress.
(All methods are considered equivalent)

ASTM D1599 — Short-Term Hydraulic Pressure Failure of Plastics Pipe, Tubing, and Fittings.
Uniform pressurization until failure between 60 and 70 seconds from start of test. Most result in ductile failure at a pressure great enough to create a 2520psi Hoop Stress.

ASTM D2122 — Test Method for Determining Dimensions of Thermoplastic Pipe and Fittings
Determination of diameter, wall thickness, and length dimensions including procedures for dimensioning molded thermoplastic pipe fittings.

IntegriFuse™

INTEGRITY Fusion Products, Inc.
270 Parkade Court, Peachtree City, GA 30269 - (P) 1.888.632.6330 - www.integrityfusion.com

FEATURES:

Manufactured from pre-blended virgin materials. These fittings are availabe in various configurations and DR and are primarily intended for use in pressure piping applications. These fittings are compatible for heat fusion to any PE material made from PE3408/PE4710/ PE100 resins that comply with ASTM D3350.Select sizes can be supplied with AWWA or FM marking. Designed for use on pipe conforming to ASTM F714, D2513, and D3035.

PRESSURE RATING:

PE4710/PE100 Butt Fusion Fittings are pressure rated in accordance with industry and regulatory guidelines for natural gas or water @73°F. Pressure ratings are subject to change depending on ambient temperatures. Pressure ratings vary according to wall thickness and the design factor for the intended application, see below for ratings:

Fitting SDR	Pressure Rating (PSI) @ 73° F (23° C)			
	Water (.63 DSF)	Water (.5 DSF)	Natural Gas (.32 DSF) US	Natural Gas (.4 DSF) Canada
7	335	265	170*	215*
9	250	200	125*	160*
11	200	160	100	125
13.5	160	125	80	100
17	125	100	65	80
21	100	80	50	65
26	80	65	40	50
32.5	65	50	30	40

* Subject to maximum operating pressure limits of regulatory requirements.

Minimum wall thickness for plastic piping gas distribution systems is limited to .062".

Above listed pressure ratings based on 73°F ambient temperature. Pressure ratings subject to derating depending on temperature.

PRESSURE TESTING:

Pressure testing can be conducted in accordance with the recommendations of the pipe manufacturer, or as described in ASTM F2164 *STANDARD PRACTICE FOR FIELD LEAK TESTING OF POLYETHYLENE (PE) PRESSURE PIPING SYSTEMS USING HYDROSTATIC PRESSURE,* typically 1.5 x's the rated working pressure not exceeding 8 hours in duration for a single test.

MAXIMUM OPERATING TEMPERATURE:

The maximium operating temperature of PE4710 Butt Fusion Fittings is 140°F. Pressure de-rating factors should be considered when operating systems above the 73°F stated pressure rating, to maintain the 50 year substantiated long-term hydrostatic strength of the polyethylene material.

STORAGE/SHELF LIFE:

Black high density polyethylene resin contains a minimum of 2% of a finely dispersed concentration of carbon black which provides protection from UV effects. Even so, it is recommended that fittings which are stored for extended periods (two years or greater) be stored indoors in their original packaging. Fittings stored indoors in their original packaging have a virtually unlimited shelf-life.

CHEMICAL RESISTANCE:

Polyethylene generally exhibits strong resistance to many chemical compounds. Known chemical resistance characteristics at specified temperatures can be found in PPI Technical Report TR-19.

INSTALLATION:

These fittings are compatible for heat fusion by butt, socket, or electrofusion joining products. They can be heat fusion joined to pipe or fittings manufactured from PE3408/PE4710/PE100 resins that comply to ASTM D3350. Qualified mechanical joining products can be used to join these fittings, consult the manufacturer for recommendations. Fusion jointing should only be attempted by persons who have been trained and have qualified joints through destructive testing.

Rev: 09/24/19 - This document replaces all previous Product Specifications and is subject to change without notice.

IntegriFuse™

The difference MOLDED Makes

At Integrity Fusion, our goal is to provide the highest quality products to the industry, and to our customers. This philosophy has been applied to Ductile Iron Backup Rings, as our rings come standard with a Fusion Bonded Epoxy Coating that is far superior to the industry standard red oxide primer, or painted epoxy, which tend to chip and begin showing signs of rust shortly after installation.

Integrity Fusion Products offers Ductile Iron Backup Rings up to 36" IPS and up to 12" DIPS in both SDR 11 and SDR 7. As a visual convenience to our customers, the backup rings are color coded as follows: Red – SDR11 IPS, Green – SDR 7 IPS, Blue – DIPS

Ductile Iron Rings:

- Fusion Bonded Epoxy Coated
- ASTM A536 Material Standard
- Made According to ANSI B16.5 Class 150 Bolt Pattern
- FM Approved

Integrity Fusion Products, Inc.
270 Parkade Court
Peachtree City, GA 30269
P: 1-888-770-6330 • P: 770-632-7530
F: 770-632-7540
E: Info@IntegrityFusion.com

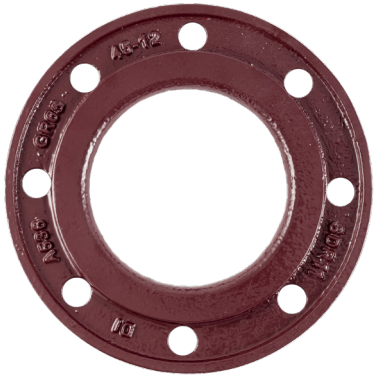

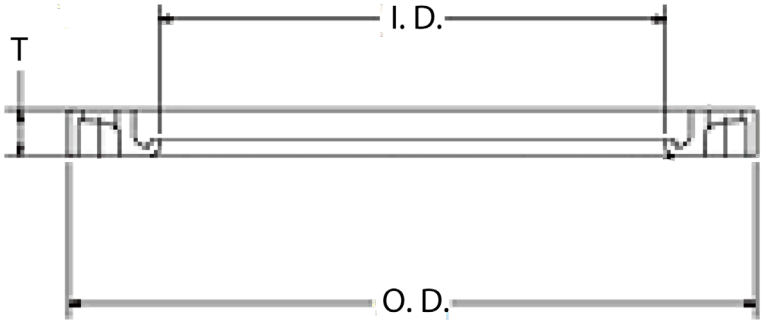

FM APPROVED

IPS-SDR 11 - Epoxy Coated DI Backup Ring

Nominal Size	SDR	OD	ID	Thickness	# Bolt Holes	Hole Diameter	Weight	Code	Notes
2" IPS	SDR 11	6.00"	2.60"	0.50"	4	0.75"	1.8 lbs.	100200	FM 200
3" IPS	SDR 11	7.50"	3.75"	0.53"	4	0.75"	2.8 lbs.	100202	FM 200
4" IPS	SDR 11	9.00"	4.75"	0.55"	8	0.75"	3.8 lbs.	100204	FM 200
6" IPS	SDR 11	11.00"	6.88"	0.63"	8	0.88"	5.6 lbs.	100206	FM 200
8" IPS	SDR 11	13.50"	8.88"	0.85"	8	0.88"	9.8 lbs.	100208	FM 200
10" IPS	SDR 11	16.00"	11.00"	0.98"	12	1.00"	13.3 lbs.	100210	FM 200
12" IPS	SDR 11	19.00"	13.15"	1.25"	12	1.00"	22.3 lbs.	100212	FM 200
14" IPS	SDR 11	21.00"	14.40"	1.38"	12	1.13"	31.0 lbs.	100214	-
16" IPS	SDR 11	23.50"	16.40"	1.65"	16	1.13"	42.0 lbs.	100216	-
18" IPS	SDR 11	25.00"	18.40"	1.67"	16	1.25"	45.0 lbs.	100218	-
20" IPS	SDR 11	27.50"	20.50"	1.81"	20	1.25"	58.0 lbs.	100220	-
24" IPS	SDR 11	32.00"	24.50"	2.17"	20	1.38"	86.0 lbs.	100222	-
28" IPS	SDR 11	36.50"	28.60"	2.50"	28	1.38"	113.0 lbs.	100224	-
30" IPS	SDR 11	38.75"	30.60"	2.60"	28	1.38"	141.0 lbs.	100226	-
32" IPS	SDR 11	41.75"	32.60"	2.75"	28	1.63"	161.0 lbs.	100227	-
36" IPS	SDR 11	46.00"	36.60"	3.15"	32	1.63"	217.0 lbs	100228	-

SDR 7 (Standard Dimension Ratio) 335 PSI - 150# Bolt Pattern
SDR 9 (Standard Dimension Ratio) 255 PSI - 150# Bolt Pattern

INTEGRITY Fusion Products, Inc.

SCH40 Fittings as needed

Performance Engineered & Tested



SPEARS® Schedule 40 PVC fitting designs combine years of proven experience with computer generated stress analysis to yield the optimum physical structure and performance for each fitting. Material reinforcement is uniformly placed in stress concentration areas for substantially improved pressure handling capability. Resulting products are subjected to numerous verification tests to assure the very best PVC fittings available.

Full 1/4" Through 12" Availability

Spears® comprehensive line of PVC fittings offers a variety of injection molded configurations in Schedule 40 sizes 1/4" through 12" conforming to ASTM D 2466.

Exceptional Chemical & Corrosion Resistance

Unlike metal, PVC fittings never rust, scale, or pit, and will provide many years of maintenance-free service and extended system life.

High Temperature Ratings

PVC thermoplastic can handle fluids at service temperatures up to 140°F (60°C), allowing a wide range of process applications, including corrosive fluids.

Lower Installation Costs

Substantially lower material costs than steel alloys or lined steel, combined with lighter weight and ease of installation, can reduce installation costs by as much as 60% over conventional metal systems.

Higher Flow Capacity

Smooth interior walls result in lower pressure loss and higher volume than conventional metal fittings.

Additional Fabricated Configurations through 36"

Extra large, hard-to-find, and custom configurations are fabricated from NSF® Certified pipe. Fittings are engineered and tested to provide full pressure handling capabilities according to Spears® specifications.

PVC Valves

SPEARS® PVC Valve products are available for total system compatibility and uniformity.

Advanced Design Specialty Fittings

Spears® wide range of innovative, improved products include numerous metal-to-plastic transition fittings and unions with Spears® patented special reinforced (SR) plastic threads.

1/2" Through 16" Industrial Pipe Availability

Spears® premium quality Industrial CPVC pipe is offered in Schedule 40 White sizes 1/2" through 16".

Sample Engineering Specifications

All PVC Schedule 40 fittings shall be produced by Spears® Manufacturing Company from PVC Type I cell classification 12454, conforming to ASTM D 1784. All injection molded PVC Schedule 40 fittings shall be Certified for potable water service by NSF International and manufactured in strict compliance to ASTM D 2466. All fabricated fittings shall be produced in accordance with Spears® General Specifications for Fabricated Fittings.

The information contained in this publication is based on current information and Product design at the time of publication and is subject to change without notification. Our ongoing commitment to product improvement may result in some variation. No representations, guarantees or warranties of any kind are made as to its accuracy, suitability for particular applications or results to be obtained therefrom. For verification of technical data or additional information not contained herein, please contact Spears® Technical Services Department [West Coast: (818) 364-1611 — East Coast: (678) 985-1263].

General Information

Recommendations For Installers And Users

Plastic piping systems should be **ENGINEERED, INSTALLED** and **OPERATED** in accordance with **ESTABLISHED DESIGN AND ENGINEERING STANDARDS AND PROCEDURES** for plastic piping systems. Suitability for the intended service application should be determined by the installer and/or user prior to installation of a plastic piping system. **PRIOR TO ASSEMBLY, all piping system components should be inspected for damage or irregularities. Mating components should be checked to assure that tolerances and engagements are compatible. Do not use any components that appear irregular or do not fit properly. Contact the appropriate manufacturer of the component product in question to determine usability. Consult all applicable codes and regulations for compliance prior to installation.**

Solvent Weld Connections — Use quality solvent cements and primers formulated for the intended service application, pipe size and type of joint. While the pipe and fitting materials may be compatible with the intended medium, the solvent cement may not be. Consult the manufacturers for suitability of use. Read and follow the cement and primer manufacturers' applications and cure time instructions thoroughly. Be sure to use the correct size applicator.

Threaded Connections — Use a quality grade thread sealant. **WARNING: SOME PIPE JOINT COMPOUNDS OR PTFE PASTES MAY CONTAIN SUBSTANCES THAT COULD CAUSE STRESS CRACKING TO PLASTIC.** Spears® Manufacturing Company recommends the use of Spears® **BLUE 75™** Thread Sealant which has been tested for compatibility with Spears® products. Please follow the sealant manufacturers' application / installation instructions. Choice of an appropriate thread sealant other than those listed above is at the discretion of the installer. 1 to 2 turns beyond **FINGER TIGHT** is generally all that is required to make a sound plastic threaded connection. Unnecessary **OVERTIGHTENING** will cause **DAMAGE TO BOTH PIPE AND FITTING.**

"Lead Free" low lead certification – unless otherwise specified, all Spears® Schedule 40 fittings specified here-in are certified by NSF International to ANSI/NSF® Standard 61, Annex G and is in compliance with California's Health & Safety Code Section 116825 (commonly known as AB1953) and Vermont Act 193. Weighted average lead content <=0.25%.

EPDM Gaskets

SUBMITTAL

EPDM Style AB-563
Manufacturer – American Biltrite

Gaskets meet the pressure ratings, drilling and dimensions of ANSI/ASME B16.2.1

Style AB-563

EPDM (Black)



Media

- Animal and Vegetable oils
- Water
- Steam
- Oxygenated solvents

Specifications

Max. Temperature:	225	(° F)
Hardness Shore A	60	
Tensile Strength ASTM D-412	1000	(PSI)
Elongation	500 %	

Availability

☐ Full Face ☐ Ring ☐ 1/16" Thick ☐ 1/8" Thick ☐ 1/4" Thick

Benefits

Commercial Grade

- Excellent for applications in which involve extreme temperature and or weather conditions. It's used extensively in high temperature installations.
- Offers ozone and chemical resistance as well as resistance to high temperatures.
- Also provides excellent electrical and dynamic properties.

TRIPAC 475 Klug Circle-Corona, CA. 92880 (951) 280-4488 - Fax: (951) 272-4445

MarMac Coupler 24"

MAR MAC® POLYSEAL REPAIR COUPLER SPECIFICATION

Scope

The Mar Mac Polyseal Repair Coupler is a connection for 8- through 60-inch (200 to 1500 mm) ADS N-12 pipe.

Material Properties

The Mar Mac Coupler, as manufactured by Mar Mac® Construction Products, Inc. and distributed by ADS, Inc., consists of a mastic adhesive base layer, a cross-laminated polyethylene middle layer and a spun-bonded geotextile polypropylene cloth outer layer.

Installation

Installation shall be in accordance with Mar Mac Construction Products, Inc. recommended installation instructions. Polyseal repair coupler, in conjunction with corrugated HDPE pipe, is considered a soil-tight connection unless otherwise approved by local governing body.

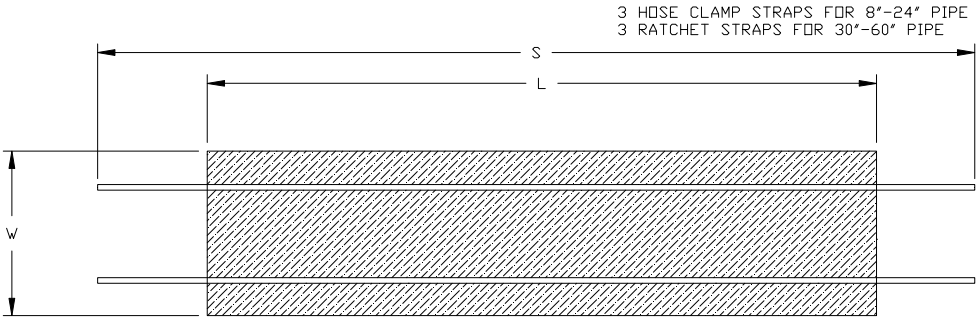

		Standard		Double Wide	
Nominal Pipe Diameter, in. (mm)	Strap Length (S) in. (mm)	Length (L) in. (mm)	Width (W) in. (mm)	Length (L) in. (mm)	Width (W) in. (mm)
8 (200)	40 (1016)	35 (889)	4 (101)	n/a	n/a
10 (250)	40 (1016)	42 (1067)	6 (152)	n/a	n/a
12 (300)	50 (1270)	52 (1321)	7 (178)	52 (1321)	12 (305)
15 (375)	58 (1473)	62 (1575)	10 (254)	62 (1575)	14 (355)
18 (450)	71 (1803)	75 (1905)	10 (254)	75 (1905)	16 (406)
24 (600)	93 (2362)	94 (2387)	12 (305)	94 (2387)	20 (508)
30 (750)	125 (3175)	125 (3175)	15 (381)	125 (3175)	24 (609)
36 (900)	141 (3581)	141 (3581)	18 (457)	141 (3581)	30 (762)
42 (1050)	161 (4089)	161 (4089)	20 (508)	161 (4089)	30 (762)
48 (1200)	183 (4648)	183 (4648)	20 (508)	183 (4648)	32 (813)
60 (1500)	219 (5562)	222 (5639)	28 (711)	222 (5639)	46 (1168)

4", 6" and 54" standard couplers may be available by special order. Contact an ADS representative.

© ADS, Inc., October 2009

24" N12 Solid

N-12® ST IB PIPE (PER AASHTO)



N-12 corrugated dual-wall pipe was introduced in 1987. Today's N-12 pipe offers significant performance advantages, plus the best soil-tight joint in the industry. Available in diameters from 4" to 60" (100 to 1500 mm), N-12 pipe is replacing reinforced concrete pipe as a preferred product for storm water applications.

ADS N-12 pipe contains a superior built-in bell-and-spigot joint. The joints are sealed by high-quality, factory-installed rubber gaskets that meet all the requirements of ASTM F477. A polyethylene bell minimizes joint distortion. The chipping and cracking that is common to concrete bells, is eliminated.

APPLICATIONS:

Storm Sewers
Retention/Detention
Golf, Turf & Recreation
Culverts/Cross Drains
Grain Aeration
Waterways
Ditch Enclosures
Slope/Edge Drains
Mining/Forestry/Industrial
Foundation Drains
Downspouts/Roof Drainage
Land Reclamation
Terracing

FEATURES:

- 4"– 60" (100 to 1500 mm) diameters available
- 6 m (19 ft, 8 in) or 4 m (13 ft) lengths available
- Bell-and-spigot joint design
- In-line bell design
- Exceptional joint strength
- Excellent abrasion and corrosion resistance
- Light weight
- Fast installation times
- Structural strength that will support H-25 live loads with 1' (0.3 m) minimum cover 54" and 60" (1350 and 1500 mm) pipe requires 2' (0.6 m) cover for H-25 loads

BENEFITS:

- Variety of diameters and lengths that will fit in any project
- Joint only requires lube for fitting – ends are pushed together for easy field installation
- Unlike pipes from other manufacturers, there are no additional gasket materials, grout or sealing bands to transport and apply
- Installation cost savings from lower shipping costs, fewer people, and less heavy equipment required
- Hydraulic efficiency from smooth interior
- Long-term durability of HDPE



ADS Service: ADS representatives are committed to providing you with the answers to all your questions, including specifications, and installation and more.

ADS N-12® ST IB PIPE (PER AASHTO) SPECIFICATION

SCOPE

This specification describes 4- through 60-inch (100 to 1500 mm) ADS N-12 ST IB pipe (per AASHTO) for use in gravity-flow drainage applications.

PIPE REQUIREMENTS

ADS N-12 ST IB pipe (per AASHTO) shall have a smooth interior and annular exterior corrugations.

- 4- through 10-inch (100 to 250 mm) shall meet AASHTO M252, Type S.
- 12- through 60-inch (300 to 1500 mm) shall meet AASHTO M294, Type S or ASTM F2306.
- Manning's "n" value for use in design shall be 0.012.

JOINT PERFORMANCE

Pipe shall be joined using a bell & spigot joint meeting AASHTO M252, AASHTO M294, or ASTM F2306. The joint shall be soil-tight and gaskets, when applicable, shall meet the requirements of ASTM F477. Gaskets shall be installed by the pipe manufacturer and covered with a removable wrap to ensure the gasket is free from debris. A joint lubricant supplied by the manufacturer shall be used on the gasket and bell during assembly.

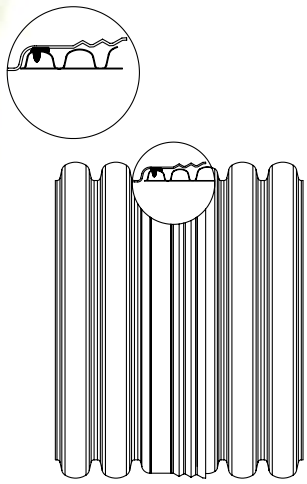

FITTINGS

Fittings shall conform to AASHTO M252, AASHTO M294 or ASTM F2306. Bell and spigot connections shall utilize a spun-on or welded bell and valley or saddle gasket meeting the soil-tight joint performance requirements of AASHTO M252, AASHTO M294 or ASTM F2306.

MATERIAL PROPERTIES

Virgin material for pipe and fitting production shall be high density polyethylene conforming with the minimum requirements of cell classification 424420C for 4- through 10-inch (100 to 250 mm) diameters, or 435400C for 12- through 60-inch (300 to 1500 mm) diameters, as defined and described in the latest version of ASTM D3350, except that carbon black content should not exceed 4%. The 12- through 60-inch (300 to 1500 mm) virgin pipe material shall comply with the notched constant ligament-stress (NCLS) test as specified in Section 9.5 and 5.1 of AASHTO M294 and ASTM F2306 respectfully.

INSTALLATION

Installation shall be in accordance with ASTM D2321 and ADS's published installation guidelines, with the exception that minimum cover in trafficked areas for 4 - through 48-inch (100 to 1200 mm) diameters shall be one foot (0.3 m), and for 54- and 60-inch (1350 and 1500 mm) diameters, shall be 2 ft (0.6 m) in single run applications. Backfill for minimum cover situations shall consist of Class 1, Class 2 (minimum 90% SPD) or Class 3 (minimum 90% SPD) material. Maximum fill heights depend on embedment material and compaction level; please refer to Technical Note 2.01. Contact your local ADS representative or visit our website at www.ads-pipe.com for a copy of the latest installation guidelines.

PIPE DIMENSIONS

	Nominal Diameter, in (mm)													
Pipe I.D., in. (mm)	4 (100)	6 (150)	8 (200)	10 (250)	12 (300)	15 (375)	18 (450)	24 (600)	30 (750)	36 (900)	42 (1050)	48 (1200)	54 (1350)	60 (1500)
Pipe O.D.**, in. (mm)	4.8 (122)	6.9 (175)	9.1 (231)	11.4 (290)	14.5 (368)	18 (457)	21 (559)	28 (711)	36 (914)	42 (1067)	48 (1219)	54 (1372)	61 (1549)	57 (1702)
Perforations	All diameters available with or without perforations.													

* Check with sales representative for availabiltity by region.

**Pipe O.D. values are provided for reference purposes only, values stated for 12- through 60-inch are ± 1 inch. Contact a sales representative for exact values.

For more information on ADS N-12 ST IB pipe (per AASHTO) and other ADS products, please contact our Customer Service Representatives at 1-800-821-6710.

ADS "Terms and Conditions of Sale" are available on the ADS website, www.ads-pipe.com.
The ADS logo, the Green Stripe, and N-12® are registered trademarks of Advanced Drainage Systems, Inc. © 2008 Advanced Drainage Systems, Inc.
BRO 10581 0908 (08459)

Advanced Drainage Systems, Inc.
4640 Trueman Blvd., Hilliard, OH 43026
1-800-821-6710 www.ads-pipe.com

ASAHI Gate Valve - 2"

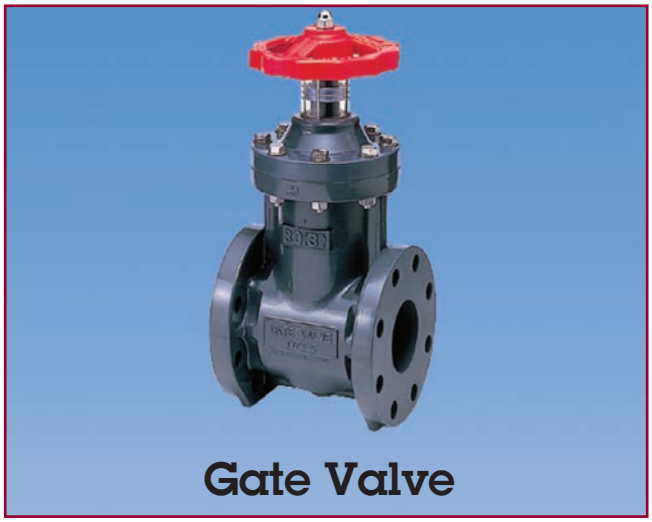

Specifications

Sizes: 1-1/2" – 14"
Body: High Impact PVC
Models: Flanged (ANSI)

Types/Sizes: "P" Type: PP, 1-1/2" – 14"
Seals: EPDM, FKM(Optional)

Sizes 1-1/2" - 14" PVC/PP/EPDM/FKM
NSF-61 Certified

Standard Features (Sizes 1-1/2" - 14")

- Straight through flow with minimal pressure drop
- Unique sliding cylindrical plug design provides larger seating area than conventional gate valves
- Made of durable, corrosion resistant plastic
- No metal to media contact anywhere in valve
- Clean-out (drain) plug in bottom area of valve body
- Rated for full vacuum service
- Lightweight for easier and economical installation
- Positive bubble-tight shut-off
- Visual position indicator

Options

- 2" square operating nut
- Stem extensions
- Locking handles
- Electric actuation, up to 3"
- FKM seals

Caution

- Never remove valve from pipeline under pressure.
- Always wear protective gloves and goggles.

Type P Parts (Sizes 1-1/2" – 6")

PARTS			
NO.	DESCRIPTION	PCS.	MATERIAL
1	Body	1	HI-PVC
2	Gate (Plug)	1	PP
3	Stem	1	HI-PVC
4	Bonnet (A)	1	HI-PVC
5	Bonnet (B)*	1	HI-PVC
6	Thrust Bearing	1 Set	PP
7	Bolt, Nut, Washer	1	Stainless Steel 304
8	Hand Wheel	1	PP
9	Indicating Cover	1	PC
10	Indicating Ring	1	PVC
11	Guide Pin	1	Stainless Steel 304
12	Guide Pin Holder	1	PVC
13	Gasket	1	EPDM
14	O-Ring (A)	1	EPDM
15	Washer	1	PVC
16	Nut	1	Stainless Steel 304
17	O-Ring (B)	1	EPDM, FKM
18	O-Ring (C)	2	EPDM, FKM
23	Sheet Gasket	1	EPDM, FKM
24	Plug	1	PVC

* Stem holder

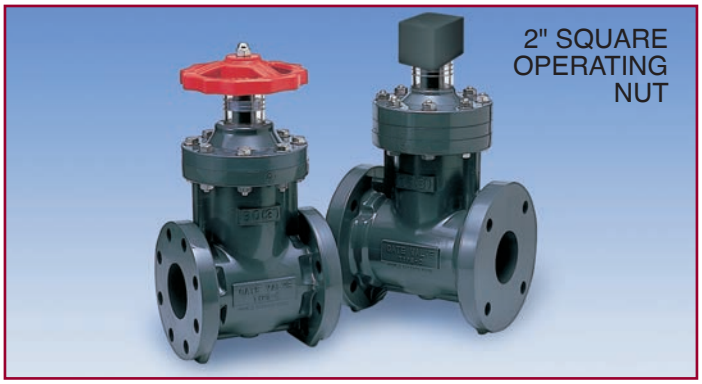

Type P Gate Valves

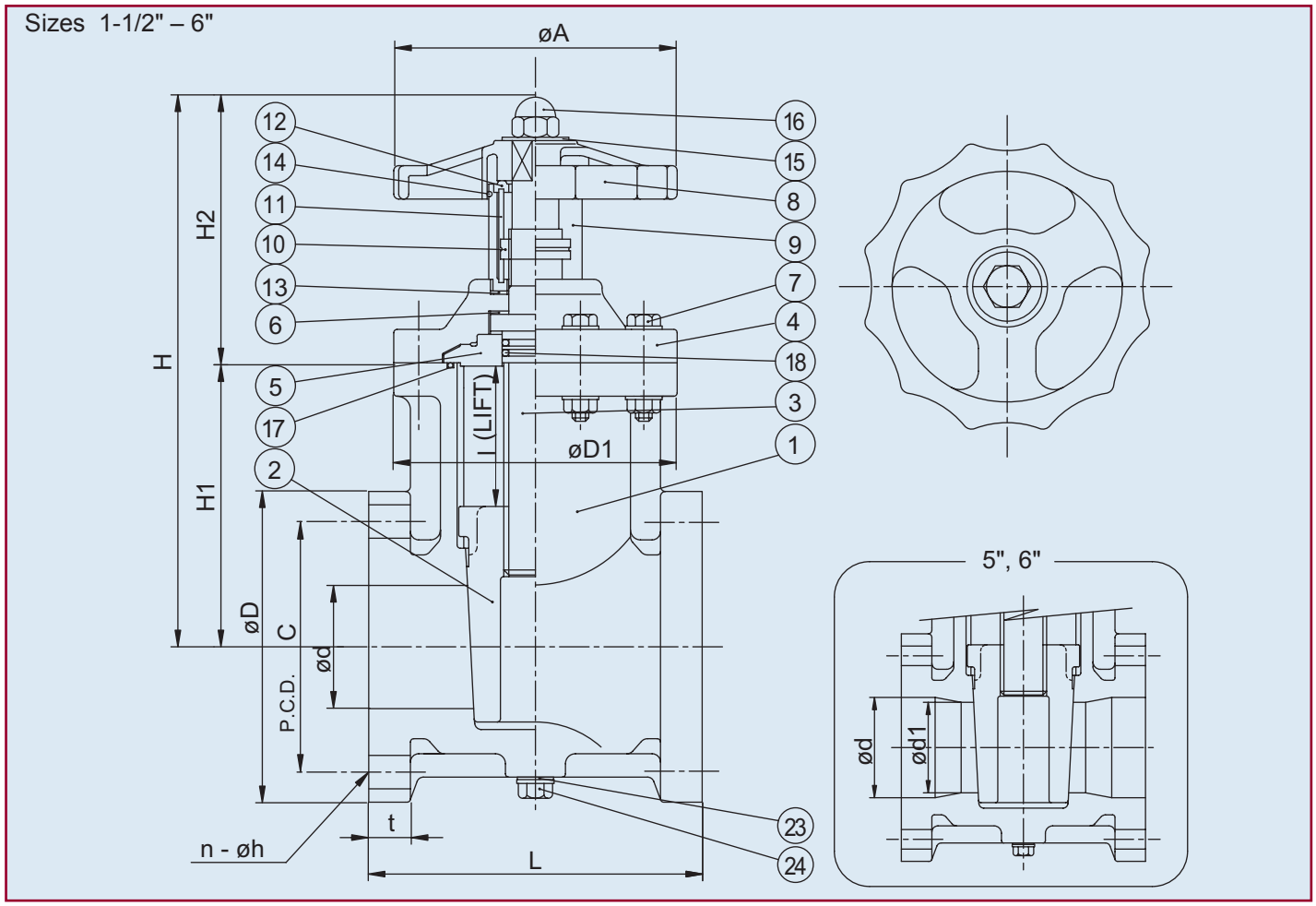

Troubleshooting

What if fluid still flows when fully closed?

1. Body or plug is worn or damaged. Replace.valve.
2. Seat is worn or damaged. Replace.
3. Foreign material caught at the bottom of body. Needs cleaning.

What if handle does not engage with stem?

1. Stem damaged or broken. Replace valve..
2. Engaging part of stem and/or plug damaged or broken. Replace valve.

What if there are leaks between bonnet and body?

1. Bolts are not tightened properly. Tighten diagonally and evenly.
2. O-ring between body and bonnet damaged or worn. Change O-ring.

Dimensions (Sizes 1-1/2" – 6") (in.)

NOMINAL SIZE			ANSI CLASS 150												
INCHES	mm	d	d1	D	C	n	h	L	t	D1	A	l	H1	H2	H
1-1/2	40	1.57	-	5.00	3.88	4	0.62	6.5	0.87	4.72	4.72	1.93	4.21	5.20	9.41
2	50	1.97	-	6.00	4.75	4	0.75	7.01	0.91	5.12	5.12	2.36	5.28	5.35	10.63
2-1/2	65	2.56	-	7.00	5.50	4	0.75	7.48	0.94	6.10	6.10	2.95	5.98	5.91	11.89
3	80	2.95	-	7.50	6.00	4	0.75	7.99	0.98	6.69	6.69	3.35	6.69	6.10	12.79
4	100	3.94	-	9.00	7.50	8	0.75	9.02	1.06	7.68	7.68	4.33	8.15	6.42	14.57
5	125	4.92	4.33	10.00	8.50	8	0.88	10.24	1.06	9.25	9.25	4.61	8.94	7.09	16.03
6	150	5.91	5.12	11.00	9.50	8	0.88	10.51	1.06	10.63	10.63	5.43	10.35	7.17	17.52

Pressure vs. Temp.
(psi, water, non-shock)

NOMINAL SIZE		30° F 120° F
INCHES	mm	
1-1/2 - 8	40-200	150
10	250	110
12 - 14	300-350	75

www.asahi-america.com • asahi@asahi-america.com • Tel: 800-343-3618 • 781-321-5409 • Fax: 800-426-7058

Gate Valves Type P

Type P Parts (Sizes 8" – 14")

PARTS			
NO.	DESCRIPTION	PCS.	MATERIAL
1	Body	1	HI-PVC
2	Gate (Plug)	1	PP
3	Stem	1	HI-PVC
4	Bonnet (A)	1	HI-PVC
4a	Bush (A)	1	PP
4b	Knock Pin (A)	1	PP
5	Bonnet (B)*	1	HI-PVC
5a	Bush (B)	1	PP
5b	Knock Pin (B)	1	PP
6	Thrust Bearing	1 Set	PP
7	Bolt, Nut, Washer	-	Stainless Steel 304
8	Hand Wheel	1	PP
9	Indicating Cover	1	PC
10	Indicating Ring	1	PVC
11	Guide Pin	1	Stainless Steel 304
12	Guide Pin Holder	1	PVC
13	Gasket	1	EPDM
14	O-Ring (A)	1	EPDM
15	Washer	1	PVC
16	Nut	1	Stainless Steel 304
17	Screw	1	Stainless Steel 304
18	O-Ring (B)	1	EPDM, FKM
19	O-Ring (C)	3	EPDM, FKM
20	O-Ring (D)	1	EPDM, FKM
21	O-Ring (E)	1	EPDM, FKM
22	O-Ring (F)	1	EPDM, FKM
23	Sheet Gasket	1	EPDM, FKM
24	Plug	1	PVC
1a	Body Metal Inserts**	-	Copper Alloy

* Stem holder
** 8" and 12" sizes: 4 inserts; 14" size: 8 inserts

Sizes: 8" – 14"

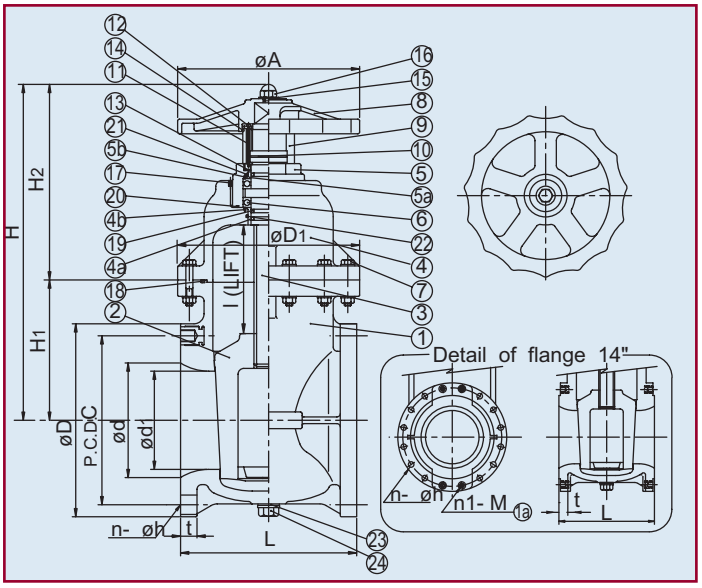

Cv Values

NOMINAL SIZE		Cv
INCHES	mm	
1-1/2	40	130
2	50	180
2-1/2	65	415
3	80	470
4	100	690
5	125	1000
6	150	1400
8	200	2900
10	250	3700
12	300	5200
14	350	7000

Weight (lbs.)

NOMINAL SIZE		WT (LBS.)
INCHES	mm	
1-1/2	40	7.50
2	50	10.20
2-1/2	65	13.00
3	80	16.60
4	100	22.00
5	125	29.00
6	150	42.00
8	200	68.50
10	250	95.00
12	300	150.00
14	350	188.00

Sample Specification

All gate valves shall be constructed of high impact PVC and have no metal to media contact. The gate shall be a tapered cylindrical plug design PVC shall conform to ASTM D1784 Cell Classification 12454-A, and PP to ASTM D4101 Cell Classification PP0210B67272. Valves shall have a pressure rating of 150psi at 70º F sizes 1-1/2" through 8", 110psi at 70º F size 10", and 75psi at 70º F sizes 12" and 14". The valve shall have a non-rising stem, come standard with sealed position indicator, clean-out plug and EPDM or FKM seals, as manufactured by Asahi/America, Inc.

Dimensions (Sizes: 8" – 14") (in.)

NOMINAL SIZE				ANSI CLASS 150												
INCHES	mm	d	d1	D	C	n	h	n1 - M	L	t	D1	A	l	H1	H2	H
8	200	7.72	6.61	13.50	11.75	6	0.88	2 - 3/4 UNC	11.50	1.10	12.20	12.20	7.09	9.45	13.27	22.72
10	250	9.72	8.27	16.00	14.25	12	0.98	-	14.96	1.18	14.17	14.17	8.90	10.63	16.54	27.17
12	300	11.73	10.04	19.00	17.00	10	0.98	2 - 7/8 UNC	15.75	1.22	16.14	16.14	10.75	12.60	18.90	31.50
14	350	13.70	11.69	21.00	18.75	8	1.14	4 - 1 UNC	16.93	1.26	17.32	17.91	12.56	12.20	23.62	35.83



Specifications

Sizes: 1/2" – 6"
Models: PVC & CPVC: Socket, Threaded and Flanged (ANSI)
PP & PVDF: IPS and Metric (DIN) Socket, Threaded, Butt and Flanged (ANSI)
Bodies: PVC, CPVC, PP and PVDF
Seats: PTFE backed with EPDM or FKM
Seals: EPDM or FKM or AFLAS®‡

Sizes 1/2" - 4" PVC/EPDM/FKM Models
1/2"- 4" CPVC/EPDM/FKM Models
NSF-61 Certified

‡ Trademark of Asahi Glass Co., Ltd.

Standard Features (Sizes 1/2" – 6")

- Pressure rated up to 230psi (PVC, CPVC, PVDF)
- Double O-ring seals on stem for added protection
- Full bore, sizes 1/2" – 2"
- Full vacuum rated, all sizes
- Blocks in two directions, upstream and downstream, leaving full pressure on the opposite end of the valve
- Integrally molded ISO mounting pad for both manual and actuated operations
- Integrally molded base pad to mount valves securely or panel mounting
- PTFE seats with elastomeric backing cushions ensure bubble tight shut-off and a low fixed torque, while at the same time compensating for wear
- True union design for easier installation or repairs without expanding the pipe system
- Built-in spanner wrench on the handle for valve disassembly and assembly
- Two sets of end connectors (socket and threaded) included with all PVC and CPVC valves in sizes 1/2"– 2"
- CPVC threaded end connectors on sizes 1/2" – 1" come with stainless steel reinforcing rings
- New PTFE seat design – Facilitates easier field maintenance if required
- Tapered O-ring groove – Helps to keep the end connector O-rings on the valve body during installation
- Body flats – Flats have been added to either side of the valve body where a wrench can be applied to prevent the valve body from turning when the union nuts are tightened
- 1/2 - 2 " PVC and CPVC T-21A design

Options

- Pneumatic and electric actuators and accessories
- Stem extensions
- 2" square operating nut or "T" nut
- Locking handles
- Limit switches
- Vented ball

Parts List (Sizes 1/2" – 2")

PARTS			
NO.	DESCRIPTION	PCS.	MATERIAL
1	Body	1	PVC, CPVC, PP, PVDF
2	Ball	1	PVC, CPVC, PP, PVDF
3	Carrier	1	PVC, CPVC, PP, PVDF
4	End Connector	2	PVC, CPVC, PP, PVDF
5	Union Nut	2	PVC, CPVC, PP, PVDF
6	Stem	1	PVC, CPVC, PP, PVDF
7	Seat	2	PTFE
8	O-Ring (A)	2	EPDM, FKM, Others
9	O-Ring (B)	1	EPDM, FKM, Others
10	O-Ring (C)	2	EPDM, FKM, Others
11	O-Ring (D)	1	EPDM, FKM, Others
12	O-Ring (E)	1	EPDM, FKM, Others
13	Stop Ring*	2	PVDF
14	Handle	1	ABS
4a	Ring**	2	304 Stainless Steel

* Used for flanged end.
** Used for CPVC body, threaded end, 1/2"–1".



www.asahi-america.com • asahi@asahi-america.com • Tel: 800-343-3618 • 781-321-5409 • Fax: 800-426-7058

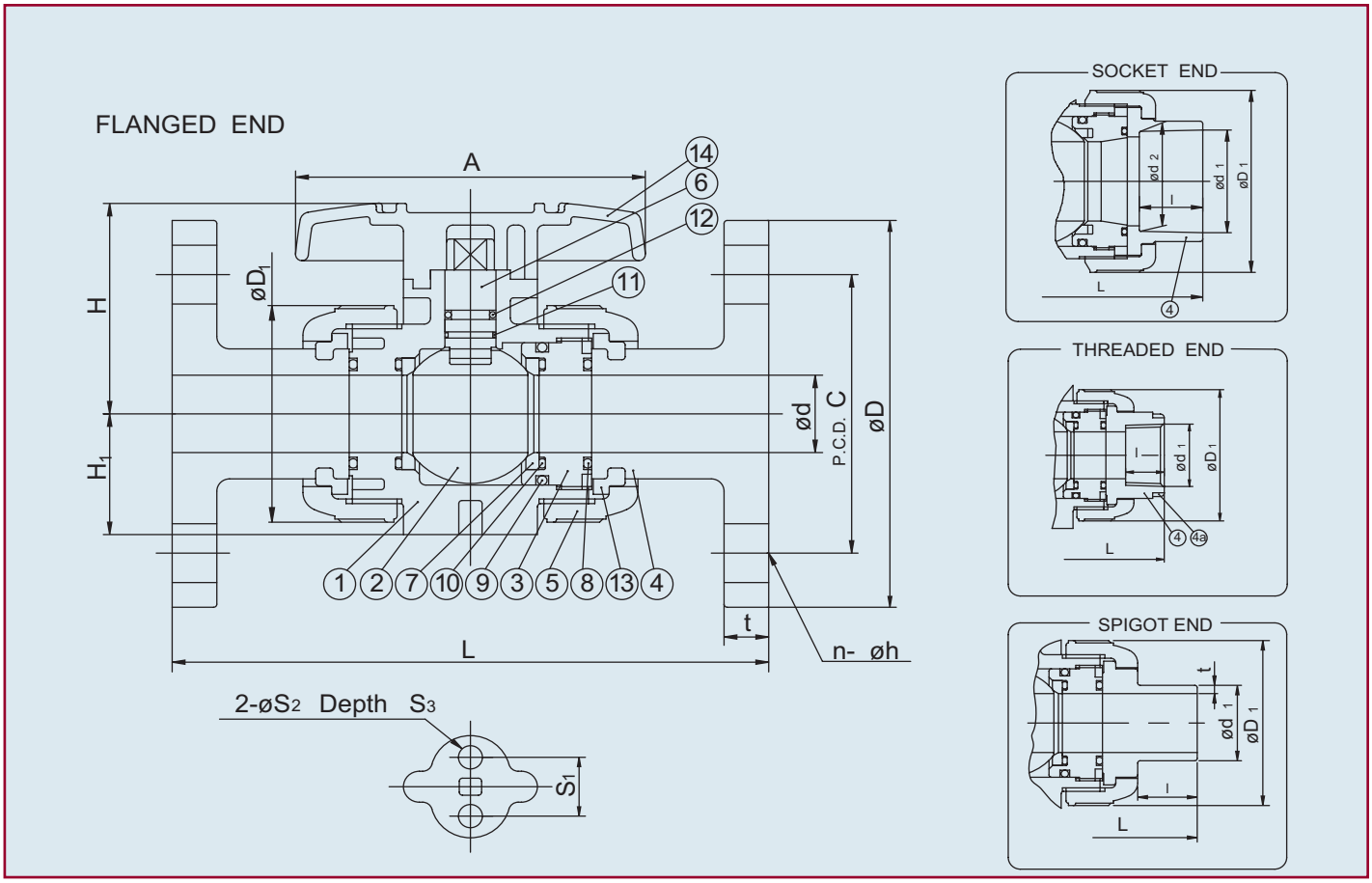

Dimensions (Sizes 1/2" – 2") (in.)

NOMINAL SIZE			FLANGED						SOCKET										
			ANSI CLASS 150						PVC, CPVC				PP, PVDF (DIN)				PP, PVDF (IPS)		
									ASTM SCH 80				DIN 16962						
INCHES	mm	d	D	C	n	h	L	t	d1	d2	l	L	d1	d2	l	L	d1	l	L
1/2	15	0.59	3.50	2.38	4	0.62	5.63	0.47	0.848	0.836	0.875	4.45	0.768	0.760	0.57	3.90	0.83	0.87	4.45
3/4	20	0.79	3.88	2.75	4	0.62	6.77	0.55	1.058	1.046	1.000	5.08	0.965	0.957	0.63	4.45	1.03	1.00	5.08
1	25	0.98	4.25	3.12	4	0.62	7.36	0.55	1.325	1.310	1.125	5.75	1.240	1.232	0.71	4.84	1.30	1.13	5.75
1-1/4	32	1.26	4.62	3.50	4	0.62	7.48	0.63	1.670	1.655	1.250	6.46	1.553	1.543	0.81	5.47	1.65	1.25	6.46
1-1/2	40	1.57	5.00	3.88	4	0.62	8.35	0.63	1.912	1.894	1.375	7.24	1.947	1.937	0.93	5.87	1.89	1.37	7.24
2	50	2.01	6.00	4.75	4	0.75	9.21	0.63	2.387	2.369	1.500	8.23	2.461	2.445	1.08	6.93	2.36	1.50	8.23

NOMINAL SIZE		THREADED			SPIGOT (BUTT END)											
					PP,PVDF											
					DIN 3442		PP	PVDF								
INCHES	mm	d1	l	L	d1	l	t	t	L	D1	H	H1	A	S1	S2	S3
1/2	15	1/2 - 14 NPT	0.59	4.02	0.787	0.728	0.098	0.075	4.882	1.89	2.03	1.14	3.62	0.75	0.29	0.43
3/4	20	3/4 - 14 NPT	0.67	4.72	0.984	0.866	0.106	0.075	5.669	2.36	2.34	1.38	3.94	0.75	0.29	0.43
1	25	1 - 11-1/2 NPT	0.79	5.16	1.260	0.886	0.118	0.094	6.063	2.76	2.68	1.54	4.33	0.75	0.29	0.43
1-1/4	32	1-1/4 - 11-1/2 NPT	0.87	5.91	1.575	1.024	0.146	0.094	6.850	3.23	3.17	1.85	4.76	1.18	0.35	0.59
1-1/2	40	1-1/2 - 11-1/2 NPT	0.98	6.42	1.968	1.260	0.181	0.118	7.638	3.94	3.50	2.17	5.16	1.18	0.35	0.59
2	50	2 - 11-1/2 NPT	1.10	7.76	2.480	1.417	0.228	0.118	8.819	4.96	4.04	2.60	6.26	1.18	0.35	0.59

Note: The shape and appearance of assembly differ a little with nominal size compared to this drawing.

FLANGED END

PARTS (Different Numbers from 1/2"-2")			
NO.	Description	PCS	MATERIAL
10	Cushion	2	EPDM, FKM, Others
15	Screw	1	304 Stainless Steel

NOTE: Quantity on Nos. 3 and 9 (see p. 6) is 2.

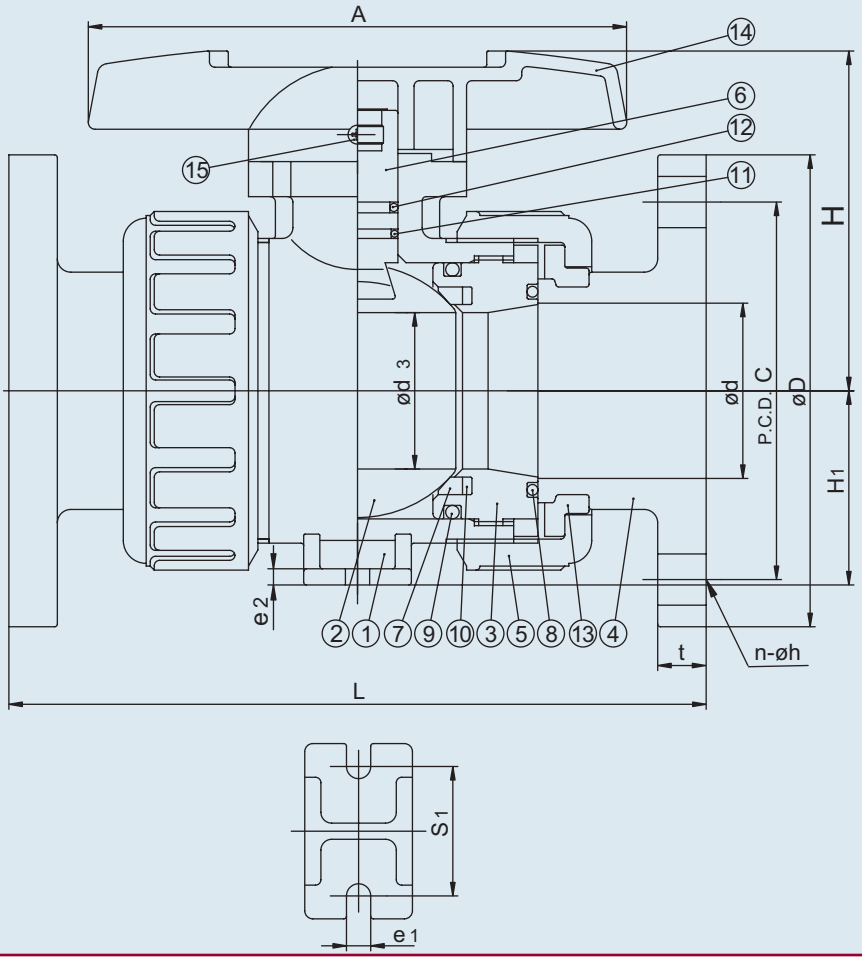

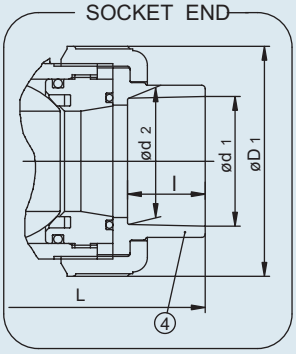

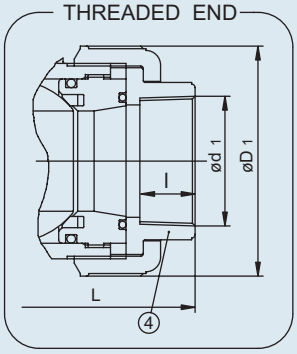

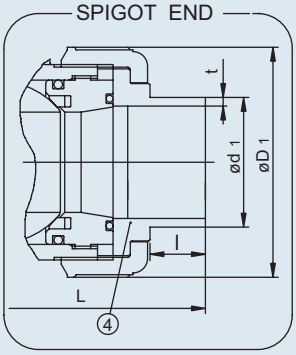

Dimensions (Sizes 2-1/2" – 4") (in.) For 6" size consult factory.

NOMINAL SIZE			FLANGED									SOCKET												
			ANSI CLASS 150									PVC, CPVC				PP, PVDF (DIN)					PP, PVDF (IPS)			
							L					ASTM SCH 80				DIN 16962			PP	PVDF			PP	PVDF
INCHES	mm	d	D	C	n	h	PVC CPVC	PP	PVDF	t	d1	d2	l	L	d1	d2	l	L	L	d1	l	L	L
2-1/2	65	2.56	7.0	5.5	4	0.75	10.20	10.12	10.08	0.71	2.889	2.868	1.750	9.45	2.923	2.911	1.22	8.07	8.03	2.88	1.752	9.37	9.33
3	80	3.07	7.5	6.0	4	0.75	12.05	12.07	11.89	0.71	3.516	3.492	1.875	11.14	3.512	3.498	1.40	9.92	9.80	3.48	1.874	11.10	10.28
4	100	3.94	9.0	7.5	8	0.75	14.72	14.72	14.53	0.71	4.518	4.491	2.000	13.89	4.293	4.278	1.63	12.28	12.09	4.48	2.252	14.37	14.13

NOMINAL SIZE		THREADED					SPIGOT (BUTT END)														
				L			PP,PVDF														
				PVC CPVC	PP	PVDF	DIN 3442		PP	PVDF	PP	PVDF									
INCHES	mm	d1	l				d1	l	t	t	L	L	d3	D1	H	H1	A	e1	e2	S1
2-1/2	65	2-1/2 - 8NPT	1.26	8.46	8.39	8.35	2.953	1.496	0.272	0.142	9.648	9.606	2.28	5,24	4.96	2.83	7.87	0.35	0.24	1.89
3	80	3 - 8NPT	1.38	10.43	10.39	10.28	3.543	1.496	0.323	0.169	11.654	11.535	2.70	5.98	5.51	3.35	9.45	0.43	0.28	2.17
4	100	4 - 8NPT	1.77	14.25	14.25	14.06	4.331	1.752	0.394	0.209	13.978	13.779	3.54	8.27	7.01	4.33	11.81	0.43	0.31	2.56

Note: The shape and appearance of assembly differ a little with nominal size compared to this drawing.

www.asahi-america.com • asahi@asahi-america.com • Tel: 800-343-3618 • 781-321-5409 • Fax: 800-426-7058

Pressure vs. Temperature (psi, water, non-shock)

NOMINAL SIZE		PVC				CPVC						PP				PVDF				
INCHES	mm	30° F 70° F	71° F 105° F	106° F 120° F	121° F 140° F	30° F 70° F	71° F 105° F	106° F 120° F	121° F 140° F	141° F 175° F	176° F 195° F	- 5° F 85° F	86° F 120° F	121° F 140° F	141° F 175° F	- 5° F 70° F	71° F 105° F	106° F 140° F	141° F 175° F	176° F 210° F
1/2-2	15-50	230	170	150	30	230	170	150	120	75	55	150	110	90	55	230	185	150	115	85
2-1/2	65	230	170	150	NA	230	170	150	120	75	55	150	95	70	40	230	185	150	115	85
3	80	230	170	150	NA	230	170	150	85	55	40	150	95	70	40	230	185	150	100	70
4-6	100-150	150	150	150	NA	150	150	150	85	55	40	150	95	70	40	150	150	150	100	70

Sample Specification

All Type-21/21A ball valves, sizes 1/2" to 4", shall be of true union design with two-way blocking capability. All O-rings shall be EPDM or FKM with PTFE seats. PTFE seats shall have elastomeric backing cushion of the same material as the valve seals. Stem shall have double O-rings and be of blowout-proof design. The valve handle shall double as carrier removal and/or tightening tool. ISO mounting pad shall be integrally molded to valve body for actuation. PVC conforming to ASTM D1784 Cell Classification 12454A, CPVC conforming to ASTM D1784 Cell Classification 23567-A, PP conforming to ASTM D4101 Cell Classification PP0210B67272 and PVDF conforming to ASTM D3222 Cell Classification Type II. The ball valves, except PP, shall have a pressure rating of 230psi for sizes 1/2" to 3" and 150psi for 4" (150psi for PP, all sizes) at 70º F. Type-21/21A ball valves must carry a two year guarantee, as manufactured by Asahi/America, Inc.

Cv Values

NOMINAL SIZE		Cv
INCHES	mm	
1/2	15	14
3/4	20	29
1	25	47
1-1/4	32	72
1-1/2	40	155
2	50	190
2-1/2	65	365
3	80	410
4	100	680

Weight (lbs.)

NOMINAL SIZE		SOCKET	FLANGED
INCHES	mm	THREADED	
1/2	15	0.44	1.10
3/4	20	0.66	1.54
1	25	1.1	2.70
1-1/4	32	1.54	3.30
1-1/2	40	2.64	4.40
2	50	4.4	8.15
2-1/2	65	6.17	8.80
3	80	9.7	13.00
4	100	24.00	26.67

Caution

- Never remove valve from pipeline under pressure.
- Always wear protective gloves and goggles.
- Watch out for trapped fluid in valve. It is safe to close valve before removing it from the pipeline.

Caution

- Do not use ball valves where media has suspended particles. Use the following valves:
  - Butterfly valves – PVDF disc is most abrasion resistant. Make sure of chemical compatibility.
  - Diaphragm valves – Elastomeric diaphragm is designed for handling suspended particles.
- Volatile fluids such as sodium hypochlorite (NaClO) and hydrogen peroxide (H_2O_2) could be trapped and gasified within the valve. We can provide you with a Type-21 ball valve with a vented ball to relieve pressure build-up inside the valve.

Troubleshooting

What if the fluid still flows when valve is closed?

1. Carrier is not properly tightened. Tighten it.
2. PTFE seat is damaged or worn. Replace seat.
3. Foreign material is caught between ball and PTFE seat. Remove material and clean.
4. Ball is damaged or worn. Change ball.

What if fluid leaks outside of valve?

1. Union nut not properly tightened. Retighten.
2. Carrier is not properly tightened. Thread it in firmly.
3. Carrier or face O-ring is damaged, worn, or missing. Replace O-ring.

What if handle does not rotate smoothly?

1. Foreign material has formed on the ball or seat. Clean both.
2. Internal part(s) chemically attacked or swollen. Refer to Asahi/America Chemical Resistance Chart for compatibility. Replace part(s) as required.
3. Carrier overtightened. Retighten properly.

What if handle rotates too freely?

1. Stem is damaged. Replace stem.
2. Handle is not engaged with stem. Disassemble and reengage. Inspect.
3. Engaging part of stem and/or ball is damaged. Change stem and/or ball.

12 GA Green Tracer Wire

Specification: Tracer-PE
Issue Date:03/20/09
Supersedes: 02/06/08

Kris-Tech Wire Co.

921 Seneca St. • PO Box 4377 • Rome, NY 13442-4377 USA
Telephone 315-339-5268 • Fax 315-339-5277
WWW.KRISTECHWIRE.COM

1.0 Scope: This specification describes single conductor **TRACER/LOCATOR WIRE** insulated with high molecular weight polyethylene (HMWPE) specifically **for use in direct burial applications**. HMWPE is a rugged and durable material considered excellent for moisture and abrasion resistance. The tracer wire's purpose of is to carry an electronic signal for use in locating underground non-metallic pipe. This product is manufactured according to Underwriters Laboratory constructions in both 30 volt and 600 volt versions suitable for use at a maximum continuous operating temperature of 75 degrees C in wet and dry locations.

2.0 Applicable Standards:
2.1 ASTM B-1, B-3, and B-8 for copper conductors.
2.2 ASTM D-1248 for Polyethylene Extrusion Materials, ICEA S-70-547 Weatherproof Resistant Polyethylene Conductors, ICEA S-61-402/NEMA WC5 Thermoplastic Insulated Wire&Cable, ICEA S-95-658/NEMA WC70 Non-Shielded 0 – 2kv Cables.
2.3 UL 1581 Standard for Electrical Wires, Cables, and Flexible Cords.

3.0 Conductors: The single copper conductors shall be solid ~~or stranded annealed or hard uncoated~~ copper per UL83 and ASTM requirements.

4.0 Insulation: The conductor shall be insulated with HMWPE as specified and applied in a concentric manner. The minimum at any point shall not be less than 90% of the specified average thickness in compliance with UL 83.

5.0 Identification: No markings are required. Custom and standard print legends are available.

6.0 Packaging: Standard length spools of 500 ft. ~~or 2500 ft~~. are packaged and labeled with the product name/description, conductor size, and manufacturer. Custom lengths are available.

7.0 Testing: The wire shall be continuously spark tested at 7500 Volts DC. Other electrical and mechanical tests shall be in accordance with UL 1581.

Type Tracer/Locator Wire – ~~30V and~~ 600 Volts 60℃

AWG Solid Conductors	Breaking Pounds soft/hard	Insulation Thickness 30v/600v	Nominal Overall Diameter 30v/600v	Approx. Shipping Wgt. (Lbs./Mft.) 30v/600v
18	47/85	0.030"/0.045"	0.10"/0.13"	8/9
16	74/135	0.030"/0.045"	0.11"/0.14"	12/14
14	124/210	0.030"/0.045"	0.12"/0.15"	18/20
12	198/~~340~~	~~0.030"~~/0.045"	~~0.14"~~/0.17"	~~27~~/30
10	310/530	0.030"/0.045"	0.16"/0.19"	40/43
8	480/820	0.030"/0.045"	0.20"/0.23"	60/64
6	760/---	0.030"/0.045"	0.22"/0.25"	92/97

Non-standard colors and custom packaging are available by quotation.

2" Boshart Pitless Adapter

STANDARD PITLESS ADAPTERS

Boshart's standard pitless adapters are designed to make raising a submersible pump for service or replacement easier. They feature gaskets for sealing on the casing.

NO LEAD <0.25% Pb by weighted avg.

	Part No.	Size	Well Casing Size	Drop Pipe Size	Hole Saw Size	Maximum Load - Lbs	Quantity L1	Quantity L2
	**Bronze, Boshart** • NSF/ANSI 372 Certified • Large gasket for more efficient sealing on casing							
	PA-800NL	1"	5" to 12"	1"	1-3/4"	900	16	
	**Bronze, Boshart** • NSF/ANSI 372 Certified • Water Systems Council Listed PAS-97 • Large gasket for more efficient sealing on casing							
	PA-100NL	1"	5" to 12"	1"	1-3/4"	2000	16	
	PA-125NL	1-1/4"	5" to 12"	1-1/4"	2-1/8"	2000	10	
	PA-200NL	2"	5-5/8" to 12"	2"	3-1/8"	5000	4	
	**Bronze, Sealwell** • NSF/ANSI 372 Certified • Large gasket for more efficient sealing on casing							
	P-100NL	1"	5" to 12"	1"	1-3/4"	2000	16	
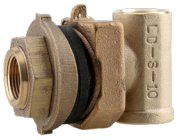	**Bronze, Dicken** • NSF/ANSI 372 Certified							
	JR-S-10NL	1"	4-1/2" to 12"	1"	1-3/4"	1500	12	
	LD-S-10NL	1"	5" to 12"	1"	1-3/4"	2000	12	
	LD-S-12NL	1-1/4"	5" to 12"	1-1/4"	2-1/8"	2000	8	
	S-20NL	2"	5-5/8" to 12"	2"	3-1/8"	5000	4	
	**304 Stainless Steel, Boshart** • NSF/ANSI 372 Certified • Large gasket for more efficient sealing on casing							
	P-800-SS	1"	5" to 12"	1"	1-3/4"	6000	1	10
	**304 Stainless Steel, Boshart** • NSF/ANSI 372 Certified • Water Systems Council Listed PAS-97 • Large gasket for more efficient sealing on casing							
	P-100-SS	1"	5" to 12"	1"	1-3/4"	6000	1	10
	P-125-SS	1-1/4"	5" to 12"	1-1/4"	2-1/8"	6000	1	5
	~~P-150-SS~~	~~1-1/2"~~	~~5" to 12"~~	~~1-1/2"~~	~~2-1/2"~~	~~6000~~	~~1~~	~~4~~
	P-200-SS	2"	5" to 12"	2"	3-1/8"	6000	1	4

PRESSURIZED PITLESS ADAPTERS

For installations requiring a pressurized point of attachment. A small hole between the internal and external gaskets ensures a positive pressure and seal to the well casing. Approved for use in the state of Illinois.

	Part No.	Size	Well Casing Size	Drop Pipe Size	Hole Saw Size	Maximum Load - Lbs	Quantity L1	Quantity L2
	**Bronze, Boshart** • NSF/ANSI 372 Certified							
	PA-100-PNL	1"	5" to 12"	1"	1-3/4"	2000	16	
	PA-125-PNL	1-1/4"	5" to 12"	1-1/4"	2-1/8"	2000	10	

Contact your sales rep for any further information
Toll Free: 1-800-561-3164
boshart.com

Halliday Hatch - S2S7248

SERIES S2S ACCESS DOOR

HALLIDAY PRODUCTS
www.HallidayProducts.com
Phone 800-298-1027
Fax 407-298-4534
Sales@HallidayProducts.com

STANDARD FEATURES:

- AUTO-LOCK T-316 STAINLESS STEEL HOLD OPEN ARM WITH RELEASE HANDLE
- T-316 STAINLESS STEEL HINGES AND ATTACHING HARDWARE
- T-316 STAINLESS STEEL SLAM LOCK WITH REMOVABLE KEY
- STAINLESS STEEL COMPRESSION SPRING ASSIST
- BUILT-IN NEOPRENE CUSHION/GASKET
- NON-OZONE DEPLETING BITUMINOUS COATING
- DOUBLE LEAF CONSTRUCTION
- 300 LBS. PER SQ. FT. LOAD RATING (1464 KG. PER SQ. METER LOAD RATING)
- EXTRUDED ALUMINUM FRAME
- RECESSED LIFTING HANDLE
- LIFETIME GUARANTEE

STANDARD SIZES				
QTY.	MODEL NO.	A DIM. INCHES (MM)	C DIM. INCHES (MM)	UNIT WT. LBS. (KG.)
	S2S4242	42 (1067)	42 (1067)	93 (42)
	S2S4842	48 (1219)	42 (1067)	99 (45)
	S2S4848	48 (1219)	48 (1219)	110 (50)
	S2S5442	54 (1372)	42 (1067)	108 (49)
	S2S5448	54 (1372)	48 (1219)	119 (54)
	S2S5454	54 (1372)	54 (1372)	127 (58)
	S2S6030	60 (1524)	30 (762)	87 (39)
	S2S6036	60 (1524)	36 (914)	100 (45)
	S2S6042	60 (1524)	42 (1067)	115 (52)
	S2S6048	60 (1524)	48 (1219)	130 (59)
	S2S6054	60 (1524)	54 (1372)	143 (65)
	S2S6060	60 (1524)	60 (1524)	158 (72)
	S2S6636	66 (1676)	36 (914)	109 (49)
	S2S6648	66 (1676)	48 (1219)	141 (64)
	S2S7236	72 (1829)	36 (914)	116 (53)
	S2S7242	72 (1829)	42 (1067)	135 (61)
	S2S7248	72 (1829)	48 (1219)	151 (68)
	S2S7254	72 (1829)	54 (1372)	168 (76)
	S2S7260	72 (1829)	60 (1524)	178 (81)

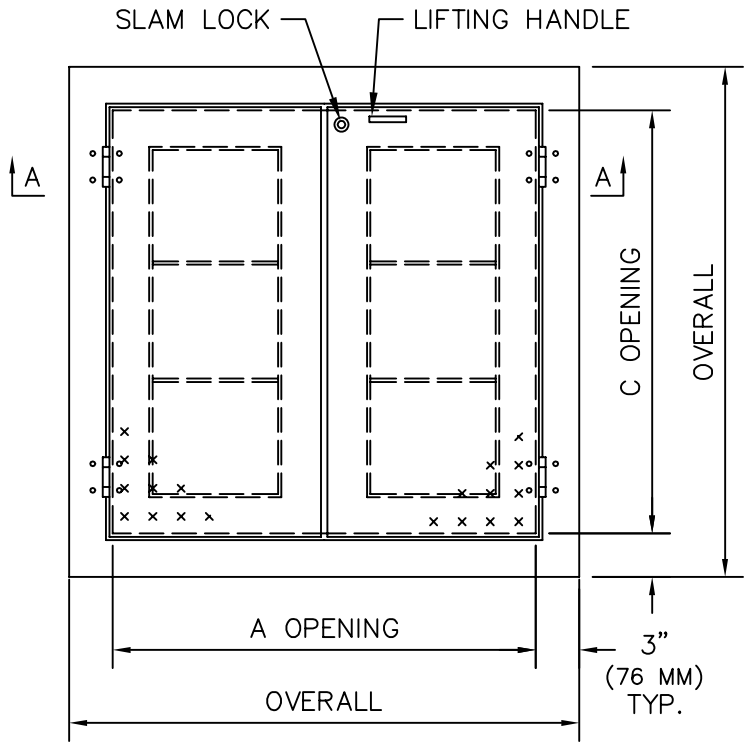

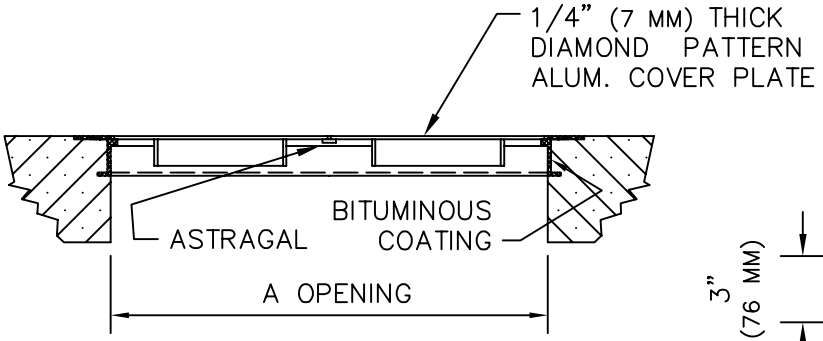

SECTION A-A

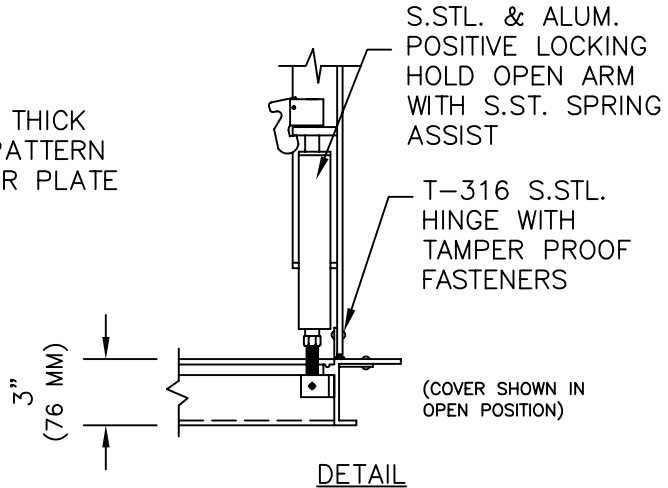

DETAIL

Project: City of Ames Ash Pond Closure
SCS Project #: 27219356.02

Section: 33 12 00
Title: Submittal #S16 – Electrical Heat Trace

Submittal Review

- [X] Conforms as submitted
- [ ] Conforms as noted – Resubmittal is:
  - [ ] Not required
  - [ ] Required
  - [ ] Noted portions only
  - [ ] For record only
- [ ] Does not conform
- [ ] Not required by contract documents
- [ ] For information only

Corrections or comments made on submittals during this review do not relieve the contractor from compliance with requirements of the drawings and specifications. This check is only for review of general conformance with the design concept of the project and general compliance with the information given in the contract documents. The contractor is responsible for; confirming and correlating all quantities and dimensions; selecting fabrication processes and techniques of construction; coordinating contractor's work with that of all other trades; and performing contractor's work in a safe and satisfactory manner.

Comments:

Reviewed By: Matt Kuhlenengel	Date: 07/24/2024
SCS QC Review By: Marty Sturzl	Date: 07/24/2024

G:\Project\27219356.02\Data and Calculations\Submittals\S16 - Heat Trace Wire\SCS Review S16-Electrical Heat Trace_240724.docx

SHOP DRAWING TRANSMITTAL

DATE: 7/12/2024

Project: Ames Ash Pond Closure & RDF Ash Pond Construction

Specification Section Number: 33 12 00 Contact Water Pumping system

Transmittal Number: 16

1st Submittal X or Resubmital _____

Contract Item	Description of Material	Manufacturer	Drawing or Data No.	Action Taken
12	Heat trace			

As stated in the Contract Documents, the undersigned CONTRACTOR's submission of these Shop Drawings or samples shall constitute a representative to the OWNER and the ENGINEER that the CONTRACTOR has either determined and verified all quantities, dimensions, field construction criteria, materials, catalogue numbers and similar data or he assumes full responsibility for doing so, and that he has reviewed and coordinated each Shop Drawing or sample with the requirements of the work and the Contract Documents and he represents to the OWNER and the ENGINEER that item(s) described by these Shop Drawings do comply with the requirements of the Contract Documents. The undersigned Contractor certifies that the equipment included in this submittal complies with the latest requirements of the Occupational Health and Safety Act of 1970 including any standards or regulations established by the U.S. Secretary of Labor in administration of said act, and the Iowa Occupational Safety and Health Statutes.

7/12/2024

(Autorized Signature of Contractor) **(Date)**

JB Holland Construction, Inc.

2191 State Hwy 52, Decorah, IA 52101

Supplier/Subcontractor:

Voltmer Electric - Subcontractor

Echo Electrical Supply - Supplie

FOR ENGINEER'S USE

n as designated above in accordance with the following legend:

A- No Exception Taken

B- Make Corrections Noted & Resubmit

C- Revise & Resubmit

D- Rejected

E- Submit Specified Item

BY: _____

DATE: _____

VOLTMER ELECTRIC INC.

2279 State HWY 9
PO Box 200
Decorah, IA 52101

Phone: (563) 382-9214
Fax: (563) 382-5923
E-mail: Will@voltmerelectric.com

Shop Drawing Submittal # 3

Submittal : Electrical Distibution Vaults
Date: 7/10/2024
Voltmer Project # 124015
Engineering Project ASH POND CLOSURE / POND CONSTRUCTION
IDNR I.D. # 310630289

Project: Ash Pond Closure / Construction
Ames Municipal Electric System
Ames, IA 50010

Vendor: Echo Electrical Supply
Attn: Justin Ingamells
Cedar Falls, IA 50613

Engineer: SCS Engineers
1690 All-State Court, Suite 100
West Des Moines, IA 50265
Project # 27219356.01

Manufacturer: Raychem

Const. Manager Voltmer Inc.
Attn: Will Hageman
2279 State HWY 9
Decorah, IA 52101

Shop Drawing Review		
No Exceptions Taken	X	
Exceptions Taken as Noted		
Resubmit With Corrections		
Submittal	#3 Electrical Equipment - Heat Trace	
Spec. Section	33 12 00 Contact Water Pumping System	
Reviewed By: Will Hageman	*Date:*	7/10/2024

NOTES:

Ames Ash Pond

Voltmer Electric

Ames, IA

Heat Trace & Thermostat

Echo Electric Supply
5621 Westminster Drive
Cedar Falls, IA 50613

XL-TRACE EDGE SELF-REGULATING HEATING CABLE



nVent RAYCHEM XL-Trace Edge self-regulating trace heating cables provide energy efficient and easy to use solutions for pipe freeze protection and flow maintenance of grease waste lines (above and below ground) and fuel lines (above ground).

FEATURES

- Simple to design
- Easy to install: cut to length, meter marks, fast RayClic cold connection system
- Energy efficient and safe: self-regulating cable, advanced energy saving controls, no cable overheating possible, suitable for plastic pipes
- Reliable during long life: 10 year extended product warranty available, maintenance free

SPECIFICATIONS

Min Installation Temperature: 0 °F

Ground Path Type: Braid

Table 1/2

Catalog Number	Item Name	Supply Voltage	Nominal Power Output @ 40°F, 120V	Nominal Power Output @ 40°F, 240V	Outer Jacket Material	Max Circuit Length
2000002607	5XLE1-CR	120 V	5 W/ft		Modified Polyolefin	287 ft
2000002608	5XLE2-CR	208 – 277 V		5 W/ft	Modified Polyolefin	584 ft
2000002609	8XLE1-CR	120 V	8 W/ft		Modified Polyolefin	233 ft
2000002610	8XLE2-CR	208 – 277 V		8 W/ft	Modified Polyolefin	452 ft
2000002611	5XLE1-CT	120 V	5 W/ft		Fluoropolymer	287 ft
2000002612	5XLE2-CT	208 – 277 V		5 W/ft	Fluoropolymer	584 ft
2000002613	8XLE1-CT	120 V	8 W/ft		Fluoropolymer	233 ft
2000002614	8XLE2-CT	208 – 277 V		8 W/ft	Fluoropolymer	452 ft

Catalog Number	Item Name	Supply Voltage	Nominal Power Output @ 40°F, 120V	Nominal Power Output @ 40°F, 240V	Outer Jacket Material	Max Circuit Length
P000000793	12XLE2-CR	208 – 277 V		12 W/ft	Modified Polyolefin	360 ft
P000000794	12XLE2-CT	208 – 277 V		12 W/ft	Fluoropolymer	360 ft
2000002864	3XLE1-CR	120 V	3 W/ft		Modified Polyolefin	368 ft
2000002865	3XLE2-CR	208 – 277 V		3 W/ft	Modified Polyolefin	642 ft

Table 2/2

Catalog Number	Item Name	Max Continuous Exposure Temperature, Power Off
2000002607	5XLE1-CR	185 °F
2000002608	5XLE2-CR	185 °F
2000002609	8XLE1-CR	185 °F
2000002610	8XLE2-CR	185 °F
2000002611	5XLE1-CT	185 °F
2000002612	5XLE2-CT	185 °F
2000002613	8XLE1-CT	185 °F
2000002614	8XLE2-CT	185 °F
P000000793	12XLE2-CR	185 °F
P000000794	12XLE2-CT	185 °F
2000002864	3XLE1-CR	185 °F
2000002865	3XLE2-CR	185 °F

WARNING

nVent products shall be installed and used only as indicated in nVent's product instruction sheets and training materials. Instruction sheets are available at www.nvent.com and from your nVent customer service representative. Improper installation, misuse, misapplication or other failure to completely follow nVent's instructions and warnings may cause product malfunction, property damage, serious bodily injury and death and/or void your warranty.

North America
Tel +1.800.545.6258
Fax +1.800.527.5703
thermal.info@nvent.com

Europe, Middle East, Africa
Tel +32.16.213.511
Fax +32.16.213.604
thermal.info@nvent.com

Asia Pacific
Tel +86.21.2412.1688
Fax +86.21.5426.3167
cn.thermal.info@nvent.com

Latin America
Tel +1.713.868.4800
Fax +1.713.868.2333
thermal.info@nvent.com

Our powerful portfolio of brands:
nVent.com CADDY ERICO HOFFMAN RAYCHEM SCHROFF TRACER

© 2024 nVent. All nVent marks and logos are owned or licensed by nVent Services GmbH or its affiliates. All other trademarks are the property of their respective owners.
nVent reserves the right to change specifications without notice.

AMC-1A

CONNECT AND PROTECT

Ambient-sensing thermostat for nonhazardous locations

PRODUCT OVERVIEW

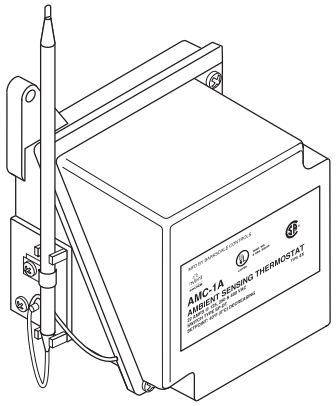

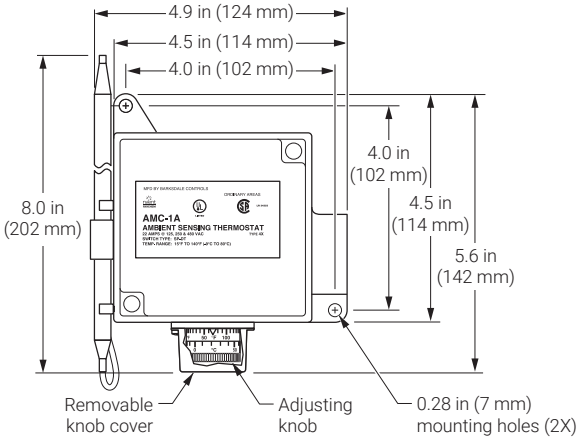

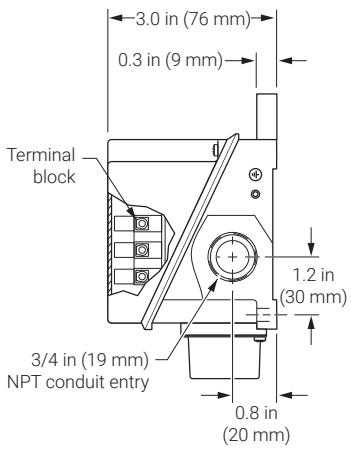

The nVent RAYCHEM AMC-1A ambient-sensing thermostat is designed to control heat-tracing systems used for freeze protection in nonhazardous locations. The thermostat responds to ambient temperature changes and has an adjustable set point. The AMC-1A can be used to control a single heat-tracing circuit or as a pilot control of a contactor switching multiple heat-tracing circuits.

SPECIFICATIONS

Enclosure	TYPE 4X, polyurethane-coated cast-aluminum housing, stainless-steel hardware
Entries	One 3/4-in (19 mm) NPT conduit hub
Set point range	15°F to 140°F (−9°C to 60°C)
Sensor exposure limits	−40°F to 160°F (−40°C to 71°C)
Housing exposure limits	−40°F to 160°F (−40°C to 71°C)
Switch	SPDT
Electrical rating	22 A at 125 / 250 / 480 Vac
Accuracy	±6°F (±3.3°C)
Deadband	2°F to 12°F (1.1°C to 6.7°C) above actuation temperature
Set point repeatability	±3°F (±1.7°C)
Sensor type	Fixed fluid-filled (silicone) bulb and capillary
Sensor material	300 series stainless steel
Connection terminals	Screw terminals, 10–14 AWG (2–5 mm^2)

APPROVALS

North America
Tel +1.800.545.6258
Fax +1.800.527.5703
thermal.info@nVent.com

Our powerful portfolio of brands:
CADDY ERICO HOFFMAN RAYCHEM SCHROFF TRACER

©2023 nVent. All nVent marks and logos are owned or licensed by nVent Services GmbH or its affiliates. All other trademarks are the property of their respective owners.
nVent reserves the right to change specifications without notice.

RAYCHEM-DS-H55199-AMC1A-EN-2302

Project: City of Ames Ash Pond Closure
SCS Project #: 27219356.02

Section: 33 22 00
Title: Submittal #S18 – Flared End Sections

Submittal Review

- [X] Conforms as submitted
- [ ] Conforms as noted – Resubmittal is:
  - [ ] Not required
  - [ ] Required
  - [ ] Noted portions only
  - [ ] For record only
- [ ] Does not conform
- [ ] Not required by contract documents
- [ ] For information only

Corrections or comments made on submittals during this review do not relieve the contractor from compliance with requirements of the drawings and specifications. This check is only for review of general conformance with the design concept of the project and general compliance with the information given in the contract documents. The contractor is responsible for; confirming and correlating all quantities and dimensions; selecting fabrication processes and techniques of construction; coordinating contractor's work with that of all other trades; and performing contractor's work in a safe and satisfactory manner.

Comments:

Reviewed By: Matt Kuhlenengel	Date: 05/06/2025
SCS QC Review By: Marty Sturzl	Date: 05/21/2025

G:\Project\27219356.02\Data and Calculations\CQA Documents\Submittals\S18 - Flared End Sections\SCS Review S18-Flared End Sections_250506.docx

SHOP DRAWING TRANSMITTAL

DATE: 4/25/2025

Project: Ames Ash Pond Closure & RDF Ash Pond Construction

Specification Section Number:

Transmittal Number: 18

1st Submittal X or Resubmital

Contract Item	Description of Material	Manufacturer	Drawing or Data No.	Action Taken
44	Flared end sections	Midstates Precast		

As stated in the Contract Documents, the undersigned CONTRACTOR's submission of these Shop Drawings or samples shall constitute a representative to the OWNER and the ENGINEER that the CONTRACTOR has either determined and verified all quantities, dimensions, field construction criteria, materials, catalogue numbers and similar data or he assumes full responsibility for doing so, and that he has reviewed and coordinated each Shop Drawing or sample with the requirements of the work and the Contract Documents and he represents to the OWNER and the ENGINEER that item(s) described by these Shop Drawings do comply with the requirements of the Contract Documents. The undersigned Contractor certifies that the equipment included in this submittal complies with the latest requirements of the Occupational Health and Safety Act of 1970 including any standards or regulations established by the U.S. Secretary of Labor in administration of said act, and the Iowa Occupational Safety and Health Statutes.

4/25/2025

Supplier/Subcontractor: 4 (Date)

Midstates Precast

JB Holland Construction, Inc.

2191 State Hwy 52, Decorah, IA 52101

FOR ENGINEER'S USE

n as designated above in accordance with the following legend:

A- No Exception Taken

B- Make Corrections Noted & Resubmit

C- Revise & Resubmit

D- Rejected

E- Submit Specified Item

BY:

DATE:

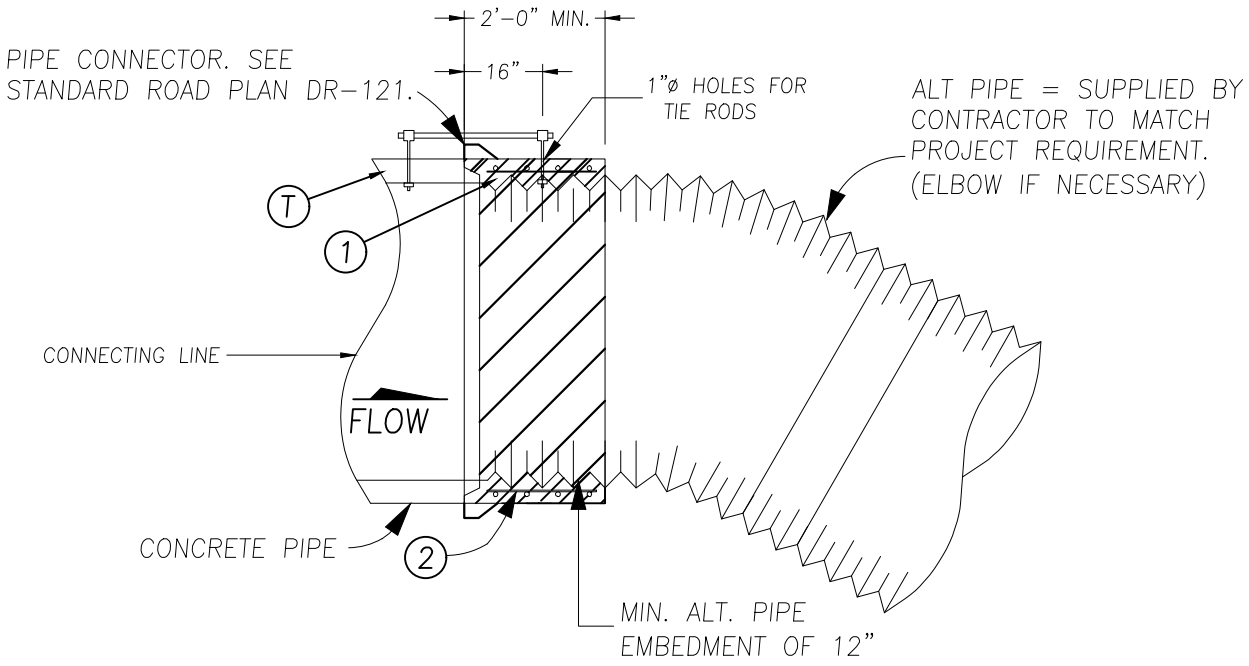

CONCRETE PIPE TO CORRUGATED PIPE

TYPE "C-3" FEMALE (ADAPTER)

(1) THICKNESS SAME AS PIPE THICKNESS (T).

(2) WELDED WIRE MESH, OR 'W' WIRE, TO MEET ASTM C76 REINFORCEMENT WITHIN CLOUSURE POUR.

(T) WALL THICKNESS OF CONCRETE PIPE, PER ASTM C76.

NOTES:

1. 28 DAY CONCRETE STRENGTH=4000 PSI (6000 PSI FOR CLASS V)
2. REINFORCING STEEL=ASTM C76 CLASS 3, 4, OR 5 AS REQUIRED.
3. REINFORCING TO BE PLACED IN ACCORDANCE TO C76 SECTION 8.
4. ALL WELDING CONSIDERED NON-STRUCTURAL.
5. NO WELDING ALLOWED ON REINFORCING MESH, ONLY ON ASTM C706 WELDABLE REBAR.

MIDSTATES PRECAST PRODUCTS
THE NEW STANDARD
2340 Hubbell Avenue SW
Bondurant, Iowa 50035
Phone (515) 410-9349
Fax (515) 410-9344

DR-122-C
ADAPTERS

NUMBER	DATE/ REV.
DWG-DR-122C-ADAPTERS SHT 1 OF 2	5/30/24

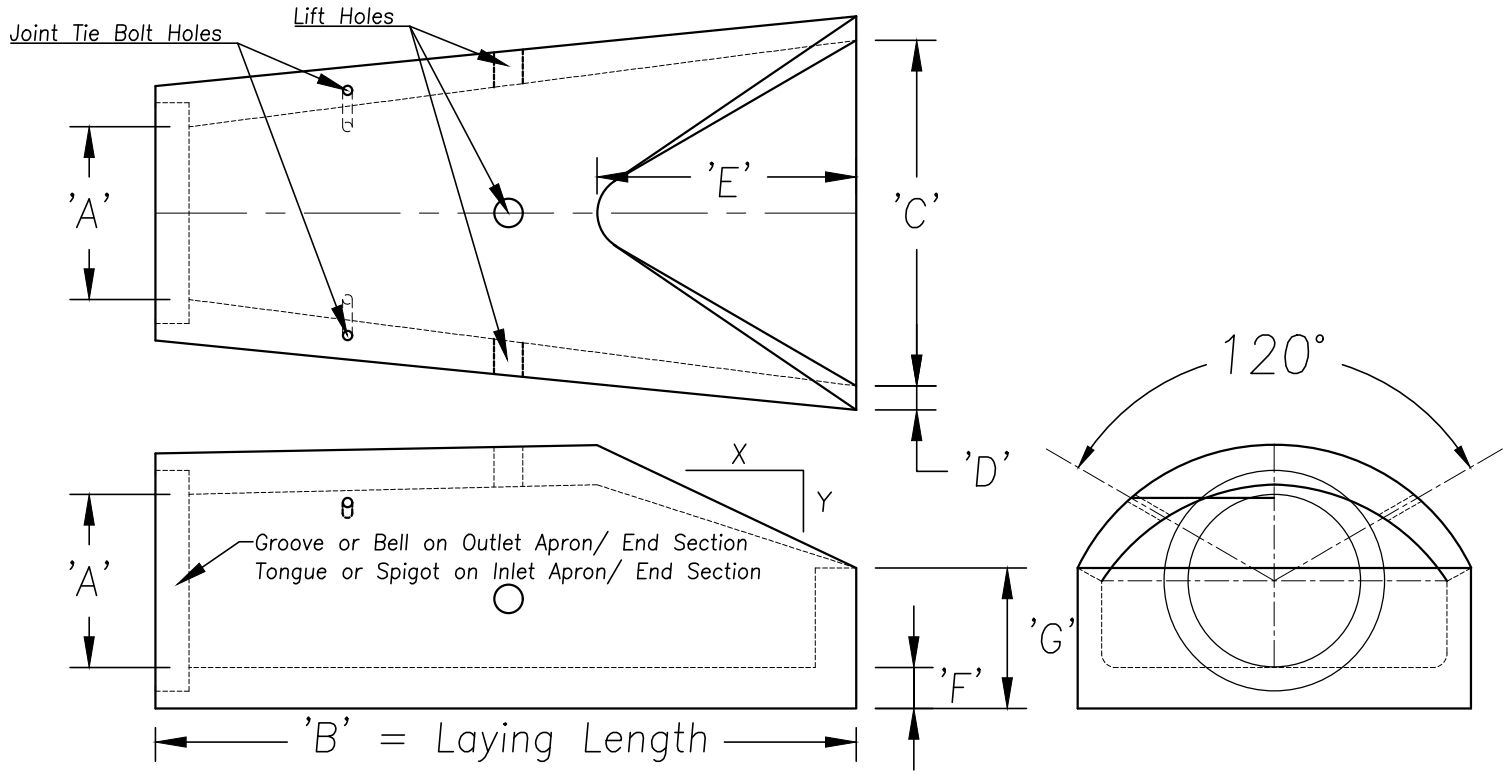

'A' Pipe Diameter (inches)	'B' Lay Length (feet)	'C' Flared/ End Apron Outside Dim. (inches)	'D' Flared End/ Apron Wall (inches)	'E' (inches)	'F' Flared End/ Apron Thickness (inches)	'G' End Wall Height (inches)	Slope (X to Y)	Inlet "Tongue" Product Weight (pounds)	Outlet "Groove" Product Weight (pounds)
12"	6'–1"	24"	2"	24"	3 11/16"	4"	2 : 1	1,300	1,260
15"	6'–1"	30"	2 1/4"	27"	4 5/32"	6"	2.1 : 1	1,830	1,770
18"	6'–1"	36"	2 1/2"	27"	4 1/4"	9"	2.1 : 1	2,260	2,190
24"	6'–1"	48"	3"	43"	4 5/16"	9 1/2"	2.3 : 1	2,820	2,730
30"	6'–1"	60"	3 1/2"	54"	4 5/8"	12"	2.3 : 1	3,645	3,535
36"	8'–1"	72"	4"	63"	4 11/16"	15"	2.4 : 1	6,090	5,950
42"	8'–1"	78"	4 1/2"	63"	5 1/4"	21"	2.4 : 1	8,040	7,830
48"	8'–1"	84"	5"	72"	5"	24"	2.4 : 1	8,770	8,480
54"	8'–2"	90"	6 1/4"	65"	6 1/4"	27"	2 : 1	12,390	12,060
60"	8'–4"	96"	5"	60"	6 3/4"	29 1/2"	1.9 : 1	13,230	12,820
72"	8'–3"	9'	6"	78"	6"	30"	1.5 : 1	16,670	16,070
84"	9'–3 1/2"	10'	6 1/2"	81"	6 1/2"	29 1/2"	1.3 : 1	24,850	24,020

Pipe Apron/ Flared End Section is manufactured in accordance with the applicable ASTM C76 specifications

Midstates Precast Products reserves the right to make changes to product design and/ or dimensions without notice.

MIDSTATES PRECAST PRODUCTS
2340 Hubbell Aveue SW
Bondurant, Iowa 50035
Phone (515) 274-9505

SCALE 1=5	REVISION	BY	DATE
DATE 7/7/21			
DR'N. AS APVD	JOB NUMBER: .		
CONT: . PROJ: . DESC: MIDSTATES PRECAST PRODUCTS FES/ APRON SUBMITTAL DATA		NUMBER DWG1901 SHT 1 of 1	REV.

Project: City of Ames Ash Pond Closure
SCS Project #: 27219356.02

Section: 33 22 00
Title: Submittal #S19 – 4" Toe Drain Collection Pipe

Submittal Review

- [X] Conforms as submitted
- [ ] Conforms as noted – Resubmittal is:
  - [ ] Not required
  - [ ] Required
  - [ ] Noted portions only
  - [ ] For record only
- [ ] Does not conform
- [ ] Not required by contract documents
- [ ] For information only

Corrections or comments made on submittals during this review do not relieve the contractor from compliance with requirements of the drawings and specifications. This check is only for review of general conformance with the design concept of the project and general compliance with the information given in the contract documents. The contractor is responsible for; confirming and correlating all quantities and dimensions; selecting fabrication processes and techniques of construction; coordinating contractor's work with that of all other trades; and performing contractor's work in a safe and satisfactory manner.

Comments:

Reviewed By: Matt Kuhlenengel	Date: 05/21/2025
SCS QC Review By: Marty Sturzl	Date: 05/21/2025

G:\Project\27219356.02\Data and Calculations\CQA Documents\Submittals\S18 - Flared End Sections\SCS Review S18-Flared End Sections_250506.docx

SHOP DRAWING TRANSMITTAL

DATE: 5/20/2025

Project: Ames Ash Pond Closure & RDF Ash Pond Construction

Specification Section Number: 33 11 00

Transmittal Number: 19

1st Submittal X or Resubmital _____

Contract Item	Description of Material	Manufacturer	Drawing or Data No.	Action Taken
41	4" Drain Tile	Fratco		

As stated in the Contract Documents, the undersigned CONTRACTOR's submission of these Shop Drawings or samples shall constitute a representative to the OWNER and the ENGINEER that the CONTRACTOR has either determined and verified all quantities, dimensions, field construction criteria, materials, catalogue numbers and similar data or he assumes full responsibility for doing so, and that he has reviewed and coordinated each Shop Drawing or sample with the requirements of the work and the Contract Documents and he represents to the OWNER and the ENGINEER that item(s) described by these Shop Drawings do comply with the requirements of the Contract Documents. The undersigned Contractor certifies that the equipment included in this submittal complies with the latest requirements of the Occupational Health and Safety Act of 1970 including any standards or regulations established by the U.S. Secretary of Labor in administration of said act, and the Iowa Occupational Safety and Health Statutes.

5/20/2025

Supplier/Subcontractor:
Kahn Tile
2176 225th St
New Hampton, IA
641-394-2809

4 **(Date)**

JB Holland Construction, Inc.

2191 State Hwy 52, Decorah, IA 52101

FOR ENGINEER'S USE

n as designated above in accordance with the following legend

A- No Exception Taken
B- Make Corrections Noted & Resubmit
C- Revise & Resubmit
D- Rejected
E- Submit Specified Item

BY: _____

DATE: _____

PRODUCT

SMOOTH CORR

MATERIAL	SIZE
V SERIES	4” - 10”



MATERIALS:

Fratco 4”- 10” V Series products, formally known as XD, are produced with 100% virgin High Density Polyethylene resin meeting the minimum requirements of cell classification of 424420C as described in ASTM D3350.

CROSS SECTION DIAGRAM:

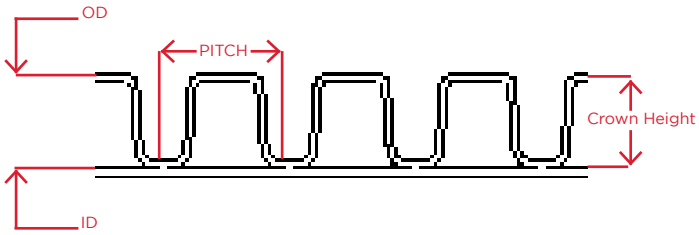

PHYSICAL PIPE DIMENSIONS:

Nominal Diameter	ID	OD	Crown Height	Pitch	Pipe Weight (Per Foot: Grams/Pounds)	Perforation Type	Available Lengths (In Feet)
4”	3.99”	4.70”	0.295”	0.647”	263 g / 0.58 lbs	Class 2	6’, 10’, 20’
6”	5.99”	7.01”	0.455”	0.65”	445 g / 0.98 lbs	Class 2	20’
8”	8.1”	9.49”	0.636”	0.97”	644 g / 1.42 lbs	Class 2	20’
10”	10.07”	11.79”	0.730”	1.33”	1152 g / 2.54 lbs	Class 2	9.75’, 20’

This specification is held in standard according to the following: AASHTO M252, ASTM F667. Gaskets, when applicable, shall meet the requirements of: ASTM F477, ASTM D3212.

INJECTION MOLDED 45° BEND
4" - 12" DIAMETER

PART #	PIPE SIZE	A	JOINT
0494ST	4 in (100 mm)	1.3 in (33 mm)	ST
0494WT	4 in (100 mm)	1.3 in (33 mm)	WT
0694ST	6 in (150 mm)	1.8 in (46 mm)	ST
0694WT	6 in (150 mm)	1.8 in (46 mm)	WT
0894ST	8 in (200 mm)	2.4 in (60 mm)	ST
0894WT	8 in (200 mm)	2.4 in (60 mm)	WT
1094ST	10 in (250 mm)	3.4 in (87 mm)	ST
1094WT	10 in (250 mm)	3.4 in (87 mm)	WT
1294ST	12 in (300 mm)	4.4 in (112 mm)	ST
1294WT	12 in (300 mm)	4.4 in (112 mm)	WT

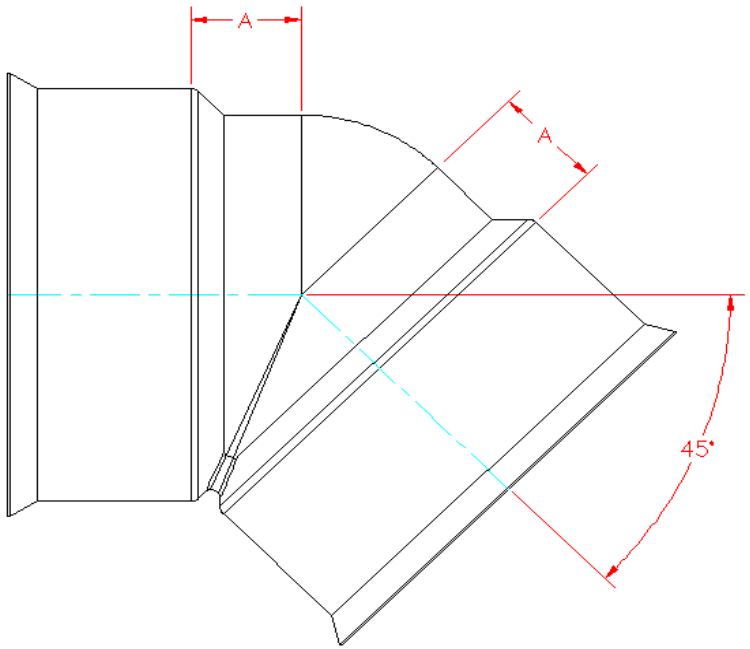

NOTE:
FITTINGS WHOSE PART NUMBERS END WITH "WT" HAVE WATER TIGHT BELL CONNECTIONS. WATER TIGHT BELLS ARE SHOWN HERE IN THIS DRAWING AND REQUIRE GASKETS TO BE FITTED TO DUAL WALL PIPE TO FORM A WATER TIGHT JOINT. (GASKETS INCLUDED)

FITTINGS WHOSE PART NUMBERS END WITH "ST" HAVE SOIL TIGHT BELL CONNECTIONS. SOIL TIGHT BELLS HAVE MOLDED CLEATS AND REQUIRE NO GASKET TO MAKE CONNECTION TO DUAL WALL PIPE.

NOTE: ALL FITTINGS DIMENSIONS ARE FOR REFERENCE ONLY

© 2023 Advanced Drainage Systems, Inc.

Advanced Drainage Systems, Inc.

DRAWING #:	3200	
DRAWN BY:	JCB	07.31.06
APPROVED BY:		
REVISIONS:	NJP	06.15.07

Appendix M

Restoration Material Manufacturer's Information

Project: City of Ames Ash Pond Closure
SCS Project #: 27219356.02

Section: 31 22 50
Title: Submittal #S10 – Erosion Control

Submittal Review

- [ ] Conforms as submitted
- [X] Conforms as noted – Resubmittal is:
  - [X] Not required
  - [ ] Noted portions only
  - [ ] Required
  - [ ] For record only
- [ ] Does not conform
- [ ] Not required by contract documents
- [ ] For information only

Corrections or comments made on submittals during this review do not relieve the contractor from compliance with requirements of the drawings and specifications. This check is only for review of general conformance with the design concept of the project and general compliance with the information given in the contract documents. The contractor is responsible for; confirming and correlating all quantities and dimensions; selecting fabrication processes and techniques of construction; coordinating contractor's work with that of all other trades; and performing contractor's work in a safe and satisfactory manner.

Comments:

- Confirm that fastener is in compliance with Part 2.13 of Section 9040, SUDAS Standard Specifications (minimum tensile strength of 50 lbs).

Reviewed By: Matt Kuhlenengel	Date: 6/3/2024
SCS QC Review By: Marty Sturzl	Date: 6/3/2024

G:\Project\27219356.02\Data and Calculations\Submittals\S10 - Erosion Control\SCS Review 10-Erosion Control_240603_.docx

SHOP DRAWING TRANSMITTAL

DATE: 5/28/2024

Project: Ames Ash Pond Closure & RDF Ash Pond Construction

Specification Section Number: 31 22 50 Erosioon Control

Transmittal Number: 10

1st Submittal X or Resubmital _____

Contract Item	Description of Material	Manufacturer	Drawing or Data No.	Action Taken
2	Silt Fence			

As stated in the Contract Documents, the undersigned CONTRACTOR's submission of these Shop Drawings or samples shall constitute a representative to the OWNER and the ENGINEER that the CONTRACTOR has either determined and verified all quantities, dimensions, field construction criteria, materials, catalogue numbers and similar data or he assumes full responsibility for doing so, and that he has reviewed and coordinated each Shop Drawing or sample with the requirements of the work and the Contract Documents and he represents to the OWNER and the ENGINEER that item(s) described by these Shop Drawings do comply with the requirements of the Contract Documents. The undersigned Contractor certifies that the equipment included in this submittal complies with the latest requirements of the Occupational Health and Safety Act of 1970 including any standards or regulations established by the U.S. Secretary of Labor in administration of said act, and the Iowa Occupational Safety and Health Statutes.

5/28/2024

Supplier/Subcontractor:
Absolute Group - Subcontractor

(Autorized Signature of Contractor) **(Date)**

JB Holland Construction, Inc.

2191 State Hwy 52, Decorah, IA 52101

FOR ENGINEER'S USE

n as designated above in accordance with the following legend:

A- No Exception Taken
B- Make Corrections Noted & Resubmit
C- Revise & Resubmit
D- Rejected
E- Submit Specified Item

BY: _____

DATE: _____

WINFAB INDUSTRIAL FABRICS

CERTIFICATE OF COMPLIANCE

WINFAB 1217DT

May 10, 2021

Storm Water Supply
12148 210th Street
Davenport, IA 52806

WINFAB 1217DT is a woven silt fence from Willacoochee Industrial Fabrics, and will meet the following Minimum Average Roll Values (MARV) when tested in accordance with the ASTM test methods listed in the table below. The yarns are woven to form a dimensionally stable network, which allows the yarns to maintain their relative position. WINFAB 1217DT resists ultraviolet deterioration, rotting, and biological degradation and is inert to commonly encountered soil chemicals. WINFAB 1217DT conforms to the property values listed below.

PROPERTY	TEST METHOD	MARV English	MARV Metric
Tensile Strength (Grab)	ASTM D-4632	150 x 125 lbs	668 x 556 N
Elongation	ASTM D-4632	15%	15%
Trapezoidal Tear	ASTM D-4533	75 x 65 lbs	330 x 289 N
UV Resistance (500 hrs)	ASTM D-4355	70%	70%
Apparent Opening Size (AOS)*	ASTM D-4751	30 US Std. Sieve	0.60mm
Permittivity	ASTM D-4491	0.05 sec-1	0.05 sec-1

***Maximum Average Roll Valve**

Disclaimer: Willacoochee Industrial Fabrics assumes no liability for the completeness or accuracy of this information or the ultimate use of this information. Willacoochee Industrial Fabrics disclaims any and all implied, expressed, or statutory standards, guarantees, or warranties. This includes without limitation any implied warranty as to merchantability or fitness for a particular purpose or arising from a course of dealing or usage of trade as to equipment, materials, or information furnished herewith. This document should not be construed as engineering advice. Always consult the project engineer for project specific requirements. The end user assumes sole responsibility for the use of this information and product. The property values listed above are subject to change without notice.

© 2013 Willacoochee Industrial Fabrics, Inc.

Miranda Adams
Quality Control Manager

Willacoochee Industrial Fabrics, Inc.
PO Box 599 • 769 West Main Street • Willacoochee, GA 31650
Ph: (912) 534-5757 • Fax: (912) 534-5533

GMA Geosynthetic Materials Association

Project: City of Ames Ash Pond Closure
SCS Project #: 27219356.02

Section: 31 22 50
Title: Submittal #S20 – Permanent Vegetative Restoration Products

Submittal Review

- [ ] Conforms as submitted
- [X] Conforms as noted – Resubmittal is:
  - [X] Not required
  - [ ] Required
  - [ ] Noted portions only
  - [ ] For record only
- [ ] Does not conform
- [ ] Not required by contract documents
- [ ] For information only

Corrections or comments made on submittals during this review do not relieve the contractor from compliance with requirements of the drawings and specifications. This check is only for review of general conformance with the design concept of the project and general compliance with the information given in the contract documents. The contractor is responsible for; confirming and correlating all quantities and dimensions; selecting fabrication processes and techniques of construction; coordinating contractor's work with that of all other trades; and performing contractor's work in a safe and satisfactory manner.

Comments:

Seed mix portion of the submittal indicates quantities of seed for one acre. This is understood to indicate the "per acre" seed quantity to be applied. Approximately seven (7) acres of the site will require vegetative restoration.

Reviewed By: Matt Kuhlenengel	Date: 06/18/2025
SCS QC Review By: Rick Guenther	Date: 06/23/2025

G:\Project\27219356.02\Data and Calculations\CQA Documents\Submittals\S20 - Seed\SCS Review S20-Permanent Vegetative Restoration Materials_250618.docx

SHOP DRAWING TRANSMITTAL

DATE: 5/30/2025

Project: Ames Ash Pond Closure & RDF Ash Pond Construction

Specification Section Number: 31 22 50

Transmittal Number: S20

1st Submittal X or Resubmital _____

Contract Item	Description of Material	Manufacturer	Drawing or Data No.	Action Taken
45 & 46	Excelsior matting	Western Excelsior Corp		
47	Fertilizer	Storm water supply		
47	Seed	United Seeds inc		

As stated in the Contract Documents, the undersigned CONTRACTOR's submission of these Shop Drawings or samples shall constitute a representative to the OWNER and the ENGINEER that the CONTRACTOR has either determined and verified all quantities, dimensions, field construction criteria, materials, catalogue numbers and similar data or he assumes full responsibility for doing so, and that he has reviewed and coordinated each Shop Drawing or sample with the requirements of the work and the Contract Documents and he represents to the OWNER and the ENGINEER that item(s) described by these Shop Drawings do comply with the requirements of the Contract Documents. The undersigned Contractor certifies that the equipment included in this submittal complies with the latest requirements of the Occupational Health and Safety Act of 1970 including any standards or regulations established by the U.S. Secretary of Labor in administration of said act, and the Iowa Occupational Safety and Health Statutes.

Supplier/Subcontractor:
Absolute Group

(Autorized Signature of Contractor) **(Date)** **5/30/2025**

JB Holland Construction, Inc.

2191 State Hwy 52, Decorah, IA 52101

FOR ENGINEER'S USE

n as designated above in accordance with the following legend

A- No Exception Taken
B- Make Corrections Noted & Resubmit
C- Revise & Resubmit
D- Rejected
E- Submit Specified Item

BY: _____

DATE: _____

MATERIAL PROPERTIES AND DIMENSIONS

WESTERN EXCELSIOR CORPORATION

EXCEL SR-1™

Specifications

Western Excelsior manufactures a full line of Rolled Erosion Control Products (RECPs). Excel SR-1 temporary Erosion Control Blanket is composed of a 100% certified weed free agricultural straw matrix mechanically (stitch) bonded on two inch centers to a single synthetic, photodegradable net. The net is secured to the top of the RECP to restrain the straw matrix once installed. Excel SR-1 blanket is intended for use in channels or on slopes requiring erosion protection for a period up to twelve months. Actual field longevity is dependent on soil and climatic conditions.

Each roll of EXCEL SR-1 is manufactured under Western Excelsior's Quality Assurance Program to ensure a continuous distribution of fibers and consistent thickness. Verified index properties are provided in Table 1 and product characteristics are provided in Table 2.

Table 1- Specified Expected Values

Tested Property	Test Method	Value
Tensile Strength (MD) x (TD)	ASTM D6818	4.8 lb/in (0.8 kN/m) x 4.8 lb/in (0.8 kN/m)
Elongation (MD) x (TD)	ASTM D6818	15 % x 20 %
Mass Per Unit Area	ASTM D6475	8.0 oz/yd^2 (271 g/m^2)
Thickness	ASTM D6525	0.28 in (7 mm)
Light Penetration	ASTM D6567	22 % open
Water Absorption	ASTM D1117	450 %

Table 2 - Netting

Top Net Type	Synthetic, Photodegradable
Bottom Net Type	N/A
Top Net Opening Dimensions	0.5 in (13 mm) x 0.5 in (13 mm)
Bottom Net Opening Dimensions	N/A

Excel SR-1 is available in multiple roll sizes ranging in width from 8.0 ft to 16.0 ft. and 112.5 ft to 600 ft in length. Standard roll sizes are 100 square yards, measuring 8.0 ft wide by 112.5 ft long. Custom roll sizes are available upon request.

Document # WE_EXCEL_SR1_SPEC. This document has been developed to provide the characteristic properties of the product described. For questions, to request performance data or installation recommendations, contact Western Excelsior at 800-967-4009 or wexcotech@westernexcelsior.com. Updated 09/16/2011.

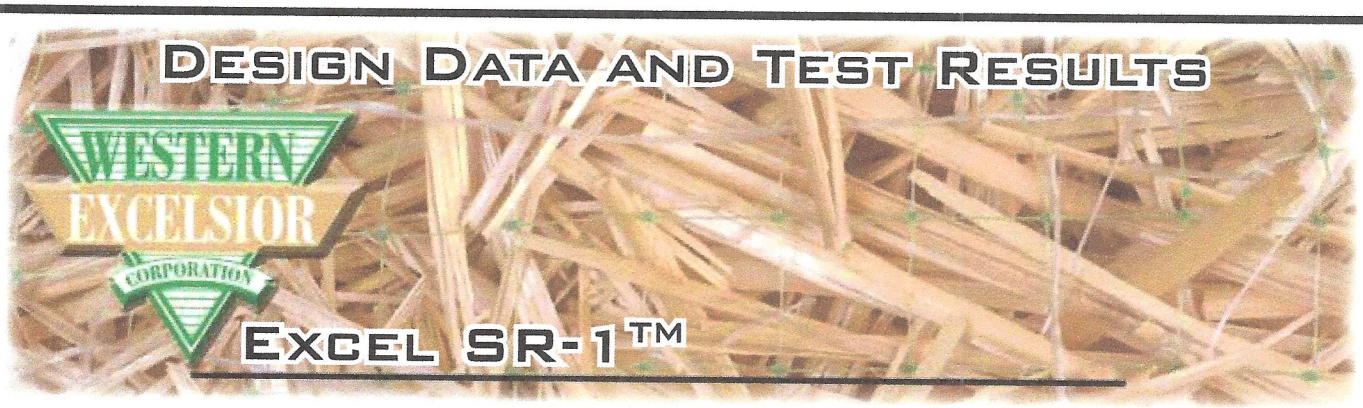

Specifications

A variety of test methods are utilized to determine performance and conformance values for Rolled Erosion Control Products (RECPs). Information within this document is presented to provide conformance values and recommended design values. Test results obtained for the Excel SR-1 Temporary Erosion Control Blanket (ECB) and general design values are presented in Tables 1-4. For specific information detailing testing protocols, results and application of design values, refer to document number WE_EXCEL_PERF_GEN.

Table 1 - Bench Scale Testing / NTPEP

Test Method	Condition	Result
ASTM D7101 Bench Scale Rainfall and Rainsplash Test	2 in per hour	9.12
	4 in per hour	10.16
	6 in per hour	11.32
ASTM D7207 Bench Scale Shear Resistance Test	1.67 psf (80 PA)	0.5 in (12 mm)
ASTM D7322 Bench Scale Vegetation Establishment Test	Top Soil, Fescue, 21 Day Incubation	424 %

Table 2 - Texas Transportation Institute (TTI) Results

Class	Test Condition	Result
A	< 3H:1 Clay Slope Test	Approved
B	< 3H:1 Sand Slope Test	N/A
C	> 3H:1 Clay Slope Test	Approved
D	> 3H:1 Sand Slope Test	N/A
E	2 psf Partially Vegetated Channel Test	N/A
F	4 psf Partially Vegetated Channel Test	N/A
G	6 psf Partially Vegetated Channel Test	N/A
H	8 psf Partially Vegetated Channel Test	N/A
I	10 psf Partially Vegetated Channel Test	N/A
J	12 psf Partially Vegetated Channel Test	N/A

Table 3 - Recommended Design Values*

Design Value	Unvegetated	Vegetated
Typical RUSLE Cover Factor (C Factor)	0.05	N/A
Maximum Slope Gradient (RUSLE)	3H : 1V	N/A
Max Allowable Velocity (0.5 in (12mm) soil loss)	5.0 ft/s (1.5 m/s)	N/A
Max Allowable Shear Stress (0.5 in (12mm) soil loss)	1.6 psf (77 PA)	N/A
CF_{veg}/CF_{TRM}	N/A	N/A

Table 4 - HEC-15 Resistance to Flow Values

Design Value	Unvegetated
Manning's n @ Tau_{lower} (0.4 psf (19 PA))	0.040
Manning's n @ Tau_{mid} (0.8 psf (38 PA))	0.030
Manning's n @ Tau_{upper} (1.6 psf (77 PA))	0.030

*Recommended Design Values are based on results of standardized industry full-scale testing and may not be applicable for all field conditions. Values provided herein are intended for use with the state of the practice design procedures. For most accurate computation of field performance, consult Excel Erosion Design (EED) at www.westernexcelsior.com.

Document # WE_EXCEL_SR1_PERF. This document has been developed to provide information regarding the bench scale and/or performance testing conducted on the Excel SR-1 ECB. For questions or installation recommendations, contact Western Excelsior Technical Services Division at 800-967-4009 or wexcotech@westernexcelsior.com. Updated 09/16/2011.



Specifications

Western Excelsior manufactures a full line of Rolled Erosion Control Products (RECPs). Excel SS-2 temporary Erosion Control Blanket is composed of a 100% certified weed free agricultural straw matrix mechanically (stitch) bound on two inch centers between two photodegradable, synthetic nets. Excel SS-2 is intended for use in channels or on slopes requiring erosion protection for a period up to twelve months. Actual field longevity is dependent on soil and climatic conditions.

Each roll of EXCEL SS-2 is manufactured under Western Excelsior's Quality Assurance Program to ensure a continuous distribution of fibers and consistent thickness. Verified index properties are provided in Table 1 and product characteristics are provided in Table 2.

Table 1- Specified Expected Values

Tested Property	Test Method	Value
Tensile Strength (MD) x (TD)	ASTM D6818	10.0 lb/in (1.8 kN/m) x 6.2 lb/in (1.1 kN/m)
Elongation (MD) x (TD)	ASTM D6818	20 % x 26 %
Mass Per Unit Area	ASTM D6475	8.0 oz/yd^2 (271 g/m^2)
Thickness	ASTM D6525	0.28 in (7 mm)
Light Penetration	ASTM D6567	22 % open
Water Absorption	ASTM D1117	450 %

Table 2 - Netting

Top Net Type	Synthetic, Photodegradable
Bottom Net Type	Synthetic, Photodegradable
Top Net Opening Dimensions	0.5 in (13 mm) x 0.5 in (13 mm)
Bottom Net Opening Dimensions	0.5 in (13 mm) x 0.5 in (13 mm)

Excel SS-2 is available in multiple roll sizes ranging in width from 8.0 ft to 16.0 ft. and 112.5 ft to 600 ft in length. Standard roll sizes are 100 square yards, measuring 8.0 ft wide by 112.5 ft long. Custom roll sizes are available upon request.

Document # WE_EXCEL_SS2_SPEC. This document has been developed to provide the characteristic properties of the product described. For questions, to request performance data or installation recommendations, contact Western Excelsior at 800-967-4009 or wexcotech@westernexcelsior.com. Updated 09/16/2011.



Specifications

A variety of test methods are utilized to determine performance and conformance values for Rolled Erosion Control Products (RECPs). Information within this document is presented to provide conformance values and recommended design values. Test results obtained for the Excel SS-2 Temporary Erosion Control Blanket (ECB) and general design values are presented in Tables 1-4. For specific information detailing testing protocols, results and application of design values, refer to document number WE_EXCEL_PERF_GEN.

Table 1 - Bench Scale Testing / NTPEP

Test Method	Condition	Result
ASTM D7101 Bench Scale Rainfall and Rainsplash Test	2 in per hour	18.96
	4 in per hour	23.47
	6 in per hour	29.04
ASTM D7207 Bench Scale Shear Resistance Test	2.14 psf (102 PA)	0.5 in (12 mm)
ASTM D7322 Bench Scale Vegetation Establishment Test	Top Soil, Fescue, 21 Day Incubation	484 %

Table 2 - Texas Transportation Institute (TTI) Results

Class	Test Condition	Result
A	< 3H:1 Clay Slope Test	Approved
B	< 3H:1 Sand Slope Test	Approved
C	> 3H:1 Clay Slope Test	Approved
D	> 3H:1 Sand Slope Test	Approved
E	2 psf Partially Vegetated Channel Test	Approved
F	4 psf Partially Vegetated Channel Test	N/A
G	6 psf Partially Vegetated Channel Test	N/A
H	8 psf Partially Vegetated Channel Test	N/A
I	10 psf Partially Vegetated Channel Test	N/A
J	12 psf Partially Vegetated Channel Test	N/A

Table 3 - Recommended Design Values*

Design Value	Unvegetated	Vegetated
Typical RUSLE Cover Factor (C Factor)	0.04	N/A
Maximum Slope Gradient (RUSLE)	2H : 1V	N/A
Max Allowable Velocity (0.5 in (12mm) soil loss)	6.0 ft/s (1.8 m/s)	N/A
Max Allowable Shear Stress (0.5 in (12mm) soil loss)	1.8 psf (86 PA)	N/A
CF_{veg}/CF_{TRM}	N/A	N/A

Table 4 - HEC-15 Resistance to Flow Values

Design Value	Unvegetated
Manning's n @ Tau_{lower} (0.5 psf (22 PA))	0.050
Manning's n @ Tau_{mid} (0.9 psf (43 PA))	0.036
Manning's n @ Tau_{upper} (1.8 psf (86 PA))	0.032

*Recommended Design Values are based on results of standardized industry full-scale testing and may not be applicable for all field conditions. Values provided herein are intended for use with the state of the practice design procedures. For most accurate computation of field performance, consult Excel Erosion Design (EED) at www.westernexcelsior.com.

Document # WE_EXCEL_SS2_PERF. This document has been developed to provide information regarding the bench scale and/or performance testing conducted on the Excel SS-2 ECB. For questions or installation recommendations, contact Western Excelsior Technical Services Division at 800-967-4009 or wexcotech@westernexcelsior.com. Updated 09/16/2011.



Professional Turf Fertilizer

6-24-24

GUARANTEED ANALYSIS

TOTAL NITROGEN (N)……..……6%
6.0% Ammoniacal Nitrogen
AVAILABLE PHOSPHATE (P_2O_5)…….24%
SOLUABLE POTASH (K_2O)……..24%
IRON (Fe)……..0%
SULFUR (S)……...0%

Plant Food Derived from: Diammonium Phosphate, Urea, Muriate of Potash

***0% Slowly Available Water Soluble Nitrogen from Poly Coated Sulfur Coated Urea**

(6/16 Mesh Size) SGN 215

DATE:	1/10/2023	PROJECT NO:	STATEWIDE
TO:	CONTRACTOR	LOCATION:	IOWA
		CONTRACTOR:	
FROM:		SEED TYPE:	SUDAS TYPE 2
	UNITED SEEDS INC.	ACRES:	1
	SEED CERTIFICATION FORM	LOT NUMBER	TBD

UNITED SEEDS INC
7500 BURLINGTON
OMAHA, NE 68127
800-456-9901
DES MOINES, IA 50316
800-365-6674

KIND*	VARIETY	PLS # / AC	AC (X)	(=) TOTAL PLS #	PLS FACTOR	TOTAL BULK LBS
TALL FESCUE	K31	100	1	150.00	BULK	150.00
PERENNIAL RYEGRASS	AMAZON	75	1	30.00	BULK	30.00
KENTUCKY BLUEGRASS	VNS	20	1	20.00	BULK	20.00

SUDAS TYPE 2

PERMANENT COOL-SEASON MIX

SEEDING DATES: MARCH 1 TO MAY 31, AUGUST 10, SEPTEMBER 30

48.75 LBS = 0.25 ACRES

LOT ANALYSIS INFORMATION WILL BE ASSIGNED ONCE THE MIXTURE IS PREPARED.
THIS MIXTURE IS NOT CERTIFIED.

Approved by:

ACRES / BAG:	0.250		TOTAL BULK LBS	200.00
LBS / BAG:	50.00	4	# of Bags	
NEED:	4	0.250	AC. TAGS	

Appendix N

Deed Notation

[The City will initiate the Deed Notation process once the DNR provides an initial indication of the acceptability of the Ash Pond Closure Construction Documentation Report.]

Appendix O

Survey Monument Documentation

Survey Control Network

Power Plant CCR Landfill
City of Ames

Project # 2240001550

SHIVEHATTERY
ARCHITECTURE + ENGINEERING

4125 Westown Parkway | Suite 100 | West Des Moines, IA 50266

515.223.8104 | fax 319.364.4251 | shive-hattery.com

CITY OF AMES

POWER PLANT CCR LANDFILL

SURVEY CONTROL NETWORK

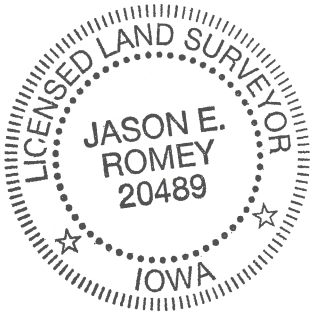

I hereby certify that this land surveying document was prepared by me or under my direct personal supervision and that I am a duly licensed Professional Land Surveyor, under the laws of the State of Iowa.

Signature: _____ Date: 3/26/2024

Name: Jason E. Romey

Iowa License Number: 20489

My license renewal date is: December 31, 2024

Pages, Sheets, or Divisions covered by this seal: Report and B.01

Prepared By:

SHIVE HATTERY
4125 Westown Parkway
Suite 100
West Des Moines, IA 50266
(515) 224-8104

Introduction

In the winter of 2024, The City of Ames authorized Shive-Hattery, Inc. to create a survey control network to be used by the Ames Power Plant and area consultants. The survey control network was created to ensure that a consistent vertical and horizontal datum is used by all.

Survey Control Establishment

The Ames Survey Control Network was used as the baseline for the creation of the network. The survey control network consists of 4 control points set at strategic locations by Shive-Hattery, Inc. The following coordinate system specifications were used:

Coordinate System:	NAD83 Iowa State Plane North Zone (1401) (US Survey Feet)
Projection:	Lambert Conformal Conic
Vertical:	North American Vertical Datum 1988 (NAVD88-Geoid 18) (US Survey Feet)

Shive-Hattery, Inc. used the Iowa Reference Network to establish the horizontal control. Real Time Kinematic Positioning was used for each control point.

Shive-Hattery, Inc. established elevation using benchmark NK0394 from the Ames Survey Control Network. After establishment, a level run was performed on each remaining monument to ensure vertical accuracy.

Survey Equipment

Shive-Hattery, Inc. performed the control network using a Trimble R12i GPS receiver and a Wild NA2 level.

Care and Use of This Report

The long-term condition of the monuments included in this report are not warranted and users are recommended to carefully scrutinize the condition of the benchmarks prior to using them. It is recommended the user always check between two or three separate monuments.



MONUMENT DESCRIPTION:

SET A 39" STEEL FENO ANCHORED SURVEY MARKER WITH ALUMINUM CAP LABELED WITH THE CORRESPONDING CONTROL POINT NUMBER AS SHOWN ABOVE.

CONTROL POINT TABLE

POINT #	NORTHING	EASTING	ELEVATION	DESCRIPTION
1	3473340.91	4894220.83	898.45	CP1 MONUMENT
2	3473960.62	4894230.11	897.74	CP2 MONUMENT
3	3473939.11	4894948.11	897.78	CP3 MONUMENT
4	3473298.57	4895147.63	897.68	CP4 MONUMENT
394	3472505.55	4891956.51	927.81	BM NK0394

SHIVEHATTERY
ARCHITECTURE + ENGINEERING
4125 WESTOWN PARKWAY, SUITE 100
WEST DES MOINES, IA 50266
515.223.8104 | SHIVE-HATTERY.COM

POWER PLANT CCR LANDFILL
SURVEY CONTROL

CITY OF AMES
200 E 5TH STREET, AMES, IA 50010

DATE	03/18/2024	SCALE	1" = 500'
DRAWN BY	KCH	FIELD BOOK	----
APPROVED BY	JER	REVISION	----

PROJECT NO.
2240001550

BASE MAP

B.01

Drawing List

Drawing C0.0	Cover
Drawing C1.0	Preconstruction Conditions
Drawing C2.0	Site Preparation and Demolition
Drawing C3.0	Documented Excavation
Drawing C3.1	Documented Separation Berm Grades
Drawing C3.2	Documented Top of Ash Grades
Drawing C3.3	Documented Final Grades
Drawing C3.5	Cross Sections
Drawing C3.6	Cross Sections
Drawing C4.0	Surface Stormwater Controls
Drawing C4.1	Subsurface Stormwater Controls
Drawing C4.2	Documented Restoration
Drawing C5.0	Details
Drawing C5.4	Details
Drawing C5.5	Details
Drawing C5.6	Details
Drawing C5.7	Details
Drawing C5.8	Details
Drawing C5.9	Details
Drawing C5.10	Details
Drawing C5.11	Details
Drawing C5.12	Details

CONSTRUCTION DOCUMENTATION
ASH POND CLOSURE
AMES MUNICIPAL ELECTRIC SYSTEM
STEAM ELECTRIC PLANT
IDNR IDENTIFICATION NUMBER 310630289

OCTOBER 2025

PREPARED FOR

CITY OF ames™

200 EAST 5TH STREET
AMES, IOWA 50010

SITE LOCATION MAP

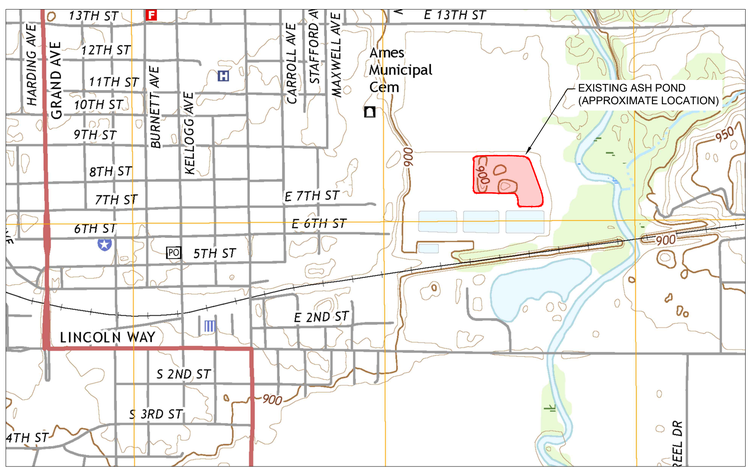

Sheet List Table	
Sheet Number	Sheet Title
C0.0	Cover
C1.0	Preconstruction Conditions
C2.0	Site Preparation and Demolition
C3.0	Documented Excavation Grades
C3.1	Documented Separation Berm Grades
C3.2	Documented Top of Ash Grades
C3.3	Documented Final Grades
C3.5	Cross Sections
C3.6	Cross Sections
C4.0	Surface Stormwater Controls
C4.1	Subsurface Stormwater Controls
C4.3	Documented Restoration
C5.0	Details
C5.4	Details
C5.5	Details
C5.6	Details
C5.7	Details
C5.8	Details
C5.9	Details
C5.10	Details
C5.11	Details
C5.12	Details

NOTE: SHEETS C3.4, C4.2, AND C5.1-C5.3 OF THE BID DRAWINGS WERE RELATED TO ALTERNATE BID ITEMS AND HAVE BEEN REMOVED.

PREPARED BY

SCS ENGINEERS

1690 All-State Court, Suite 100
West Des Moines, IA 50265
(515) 631-6160 eFAX (913) 681-0012

PROJECT NO. 27219356.02

REV.	DATE		CK. BY

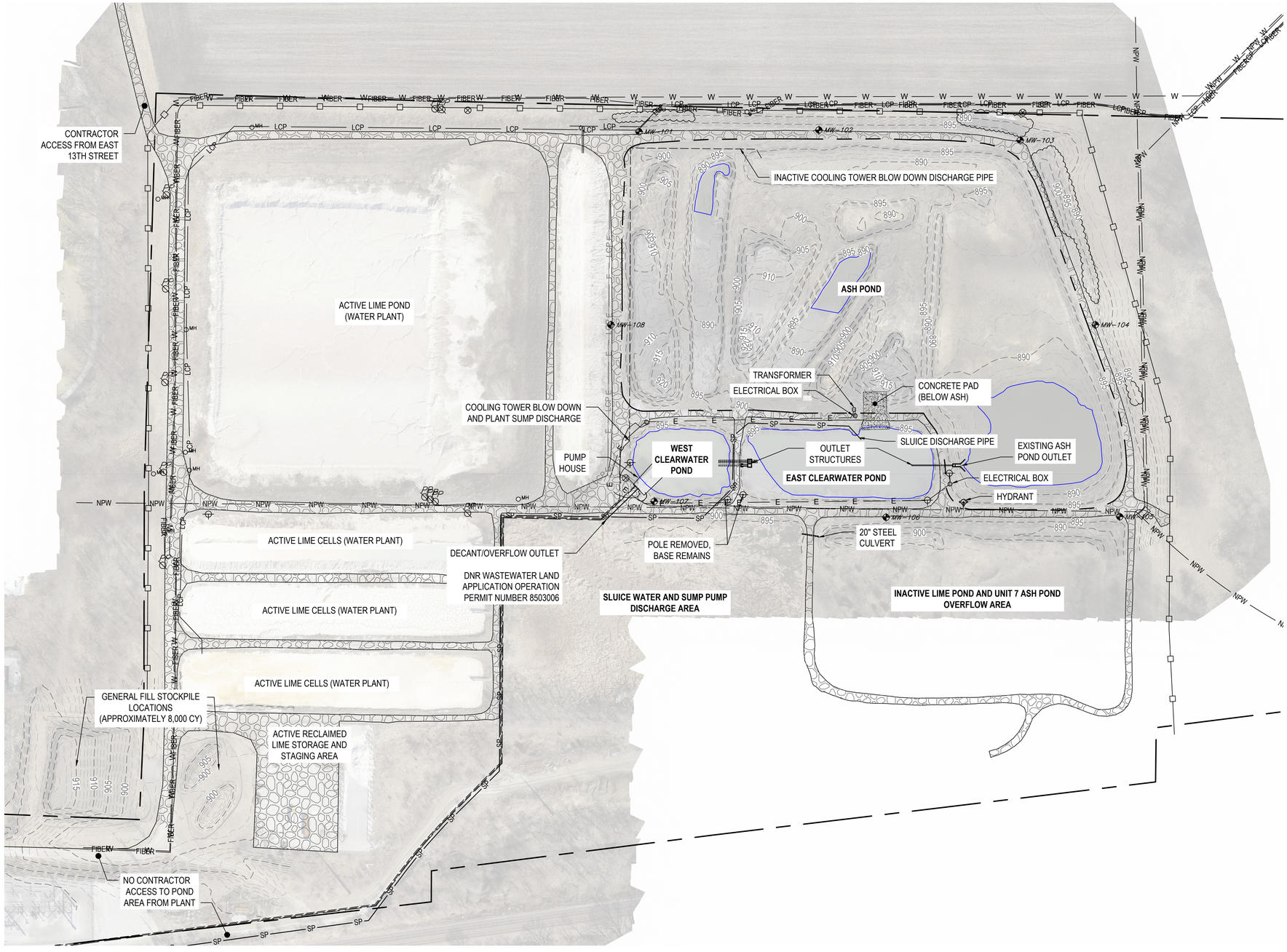

GENERAL LEGEND:

- 890 — PRECONSTRUCTION 5-FOOT CONTOUR
- 886 — PRECONSTRUCTION 1-FOOT CONTOUR
- PROPERTY LINE (APPROXIMATE)
- PERIMETER FENCE
- EXISTING ASH POND BOUNDARY (APPROXIMATE)
- UNPAVED ROAD
- EXISTING CONCRETE
- EDGE OF WATER (APPROXIMATE)
- VEGETATION
- E — E — ELECTRICAL LINE
- E — E — ABANDONED ELECTRICAL LINE
- CONTROL POINT
- PP — POWER POLE
- LIGHT POLE
- FIBER — FIBER OPTIC CABLE
- W — W — POTABLE WATER PIPE
- NPW — NON-POTABLE WATER PIPE
- LCP — ACTIVE LIME SLUDGE PIPE
- MW — MONITORING WELL
- PIEZOMETERS
- MH — MANHOLE
- SP — MAIN ASH SLUICE PIPE
- GRAY WATER LINE (COOLING TOWER BLOWDOWN, STORMWATER RUNOFF, OR SLUICE WATER RETURN LINE)
- LCP — ABANDONED LIME SLUDGE PIPE

100 0 100 200
SCALE FEET

NOTES:

1. TOPOGRAPHIC SURVEY PERFORMED BY SHIVE-HATTERY ON MARCH 24, 2023.
2. AERIAL IMAGE TAKEN DURING TOPOGRAPHIC SURVEY PERFORMED BY SHIVE-HATTERY ON MARCH 24, 2023.
3. PROPERTY LINE, FENCING, EXISTING ROADS, STRUCTURES, AND UTILITIES ARE APPROXIMATE.
4. VEGETATION INSIDE LIMITS OF ASH POND AND CLEARWATER PONDS HAS NOT BEEN SHOWN FOR CLARITY .

CK BY							
DATE							
REV.							

SHEET TITLE: **PRECONSTRUCTION CONDITIONS**

PROJECT TITLE: **CONSTRUCTION DOCUMENTATION ASH POND CLOSURE**

CLIENT: **AMES MUNICIPAL ELECTRIC SYSTEM STEAM ELECTRIC PLANT**

200 EAST 5TH STREET AMES, IOWA 50010

SCS ENGINEERS
1690 All-State Court, Suite 100
West Des Moines, IA 50265
PH. (515) 631-6160 FAX. (515) 681-0012

PROJ. NO.	DSN. BY:	DWN. BY:	CHK. BY:	QA/QM BY:	PROJ. MGR.
27219356.02	MRK	MRK	MRS	MRH	MRS

CADD FILE: PRECONSTRUCTION CONDITIONS.DWG

DATE: 10/2/25

DRAWING NO.: **C1.0**

G:\PROJECT\27219356.02\AUTOCAD\SHEETS\PRECONSTRUCTION CONDITIONS.DWG

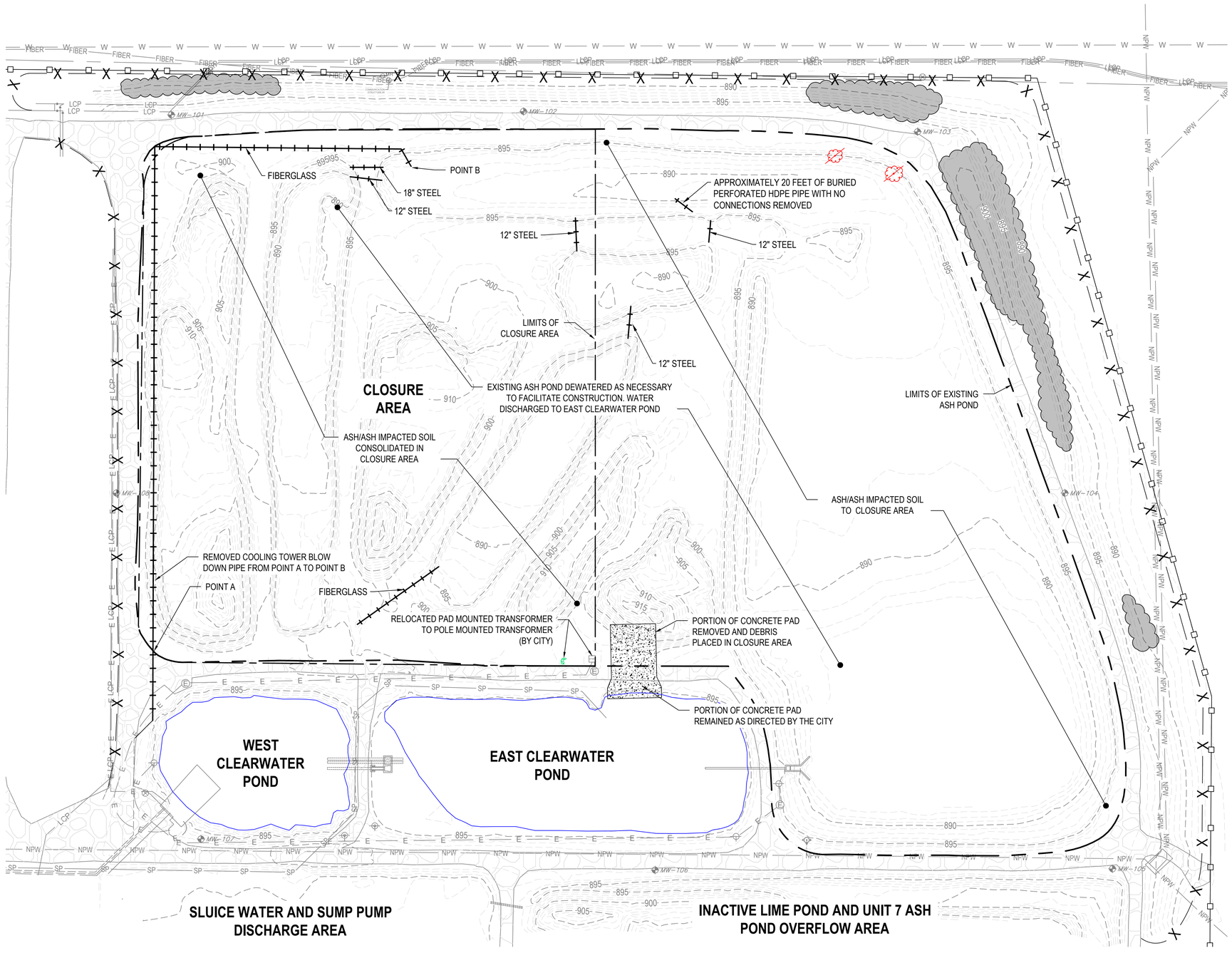

LEGEND:

- PRECONSTRUCTION 5' CONTOUR
- PRECONSTRUCTION 1' CONTOUR
- REMOVED PIPE
- REMOVED TREES LARGER THAN 6" IN DIAMETER
- INSTALLED SILT FENCE
- CLEARED AND GRUBBED (OUTSIDE ASH POND)
- EXISTING ASH POND LIMITS

50 0 50 100
SCALE FEET

NOTES:

1. SEE SHEET C1.0 FOR PRECONSTRUCTION SITE LAYOUT AND GENERAL LEGEND.

REV:	DATE	CK BY

SHEET TITLE
SITE PREPARATION AND DEMOLITION

PROJECT TITLE
CONSTRUCTION DOCUMENTATION
ASH POND CLOSURE

CLIENT
AMES MUNICIPAL ELECTRIC SYSTEM
STEAM ELECTRIC PLANT
200 EAST 5TH STREET
AMES, IOWA 50010

SCS ENGINEERS
1690 All-State Court, Suite 100
West Des Moines, IA 50265
PH. (515) 631-6160 FAX. (913) 681-0012

PROJ. NO.	DSN. BY:	DWN. BY:	CHK. BY:	QUALKNW BY:	PROJ. MGR:
27219356.02	MRK	MRK	MRS	MRH	MRS

CADD FILE:
C2.0 SITE PREPARATION AND DEMOLITION.DWG

DATE:
10/6/25

DRAWING NO.
C2.0

G:\PROJECT\27219356.02\AUTOCAD\SHEETS\C2.0 SITE PREPARATION AND DEMOLITION.DWG

ASH CONTACT WATER COLLECTION PIPE DUAL DIRECTION CLEANOUTS SEE DETAIL 3/C5.11

REGRADED ASH SLOPE FROM BOTTOM OF EXCAVATED ASH/LINER TO EXISTING GRADES

TOE OF SEPARATION BERM

ASH AND ASH IMPACTED CLAY EXCAVATED ALONG CLOSURE AREA SIDE SLOPES AND PLACED IN CLOSURE AREA TO FACILITATE FINAL COVER AND SWALE CONSTRUCTION

CLOSURE AREA

ASH CONTACT WATER COLLECTION PIPE SEE DETAILS 3/C5.10

ASH CONTACT WATER SUMP PIPE AND PUMPING AREA SEE NOTE 4 SEE DETAIL 1/C5.10

ASH CONTACT WATER COLLECTION PIPE DUAL DIRECTION CLEANOUTS SEE DETAIL 3/C5.11

ASH CONTACT WATER COLLECTION SYSTEM SOUTHEAST END CLEANOUTS SEE DETAIL 3/C5.11

ASH CONTACT WATER COLLECTION SYSTEM RISER PIPE SEE DETAILS 1,2,&4/C5.10

ASH CONTACT WATER DISCHARGE FORCEMAIN SEE SHEET C3.2

ASH CONTACT WATER PUMP CONTROL PANEL SEE DETAIL 2/C5.11

ASH CONTACT WATER COLLECTION SYSTEM VAULT SEE DETAIL 4/C5.10

WEST CLEARWATER POND

EAST CLEARWATER POND

LEGEND:

- PRECONSTRUCTION 5' CONTOUR
- PRECONSTRUCTION 1' CONTOUR
- DOCUMENTED BOTTOM OF EXCAVATION 5' CONTOUR
- DOCUMENTED BOTTOM OF EXCAVATION 1' CONTOUR
- TOE OF SEPARATION BERM
- LIMITS OF CLOSURE AREA
- ASH CONTACT WATER COLLECTION PIPE
- FM — ASH CONTACT WATER DISCHARGE FORCEMAIN
- ASH CONTACT WATER SOLID CLEANOUT PIPE
- ASH/ASH IMPACTED CLAY LINER EXCAVATION
- CONTACT WATER PUMPING AREA

40 0 40 80
SCALE FEET

NOTES:

1. ASH EXCAVATION AREAS ARE BASED ON DOCUMENTED LIMITS OF ASH. ASH WAS FOUND BEYOND THE ORIGINAL LIMITS SHOWN AND SUBSEQUENTLY EXCAVATED.
2. TEST PITS WERE EXCAVATED ALONG ASH POND SIDE SLOPES TO DETERMINE EXTENT OF ASH. WHERE ASH WAS NOT PRESENT, EXCAVATION WAS TERMINATED.
3. ASH IMPACTED SOIL DID NOT EXTEND 1-FOOT INTO THE EXISTING ASH POND CLAY LINER. ASH IMPACTED CLAY WAS EXCAVATED TO THE DEPTH DIRECTED BY THE OWNER/OWNER'S REPRESENTATIVE.
4. ASH WAS EXCAVATED FROM THE ASH CONTACT WATER PUMPING AREA DURING ASH CONTACT WATER COLLECTION SYSTEM INSTALLATION. ONCE COMPLETED, THE ASH WAS PLACED OVER THE SYSTEM AS SHOWN IN THE DETAIL.

REV:	DATE	CK BY

SHEET TITLE
DOCUMENTED EXCAVATION GRADES

PROJECT TITLE
CONSTRUCTION DOCUMENTATION
ASH POND CLOSURE

CLIENT
AMES MUNICIPAL ELECTRIC SYSTEM
STEAM ELECTRIC PLANT
200 EAST 5TH STREET
AMES, IOWA 50010

SCS ENGINEERS
1690 All-State Court, Suite 100
West Des Moines, IA 50266
PH: (515) 631-6160 FAX: (913) 681-0012

PROJ. NO.	DSN. BY:	DWN. BY:	CHK. BY:	QA/QC BY:	PROJ. MGR.
27219356.02	MRK	MRK	MRS	MRH	MRS

CADD FILE:
C3.0 PROPOSED GRADING - EXCAVATION.DWG

DATE:
10/2/25

DRAWING NO.
C3.0

G:\PROJECT\27219356.02\AUTOCAD\SHEETS\C3.0 PROPOSED GRADING - EXCAVATION.DWG

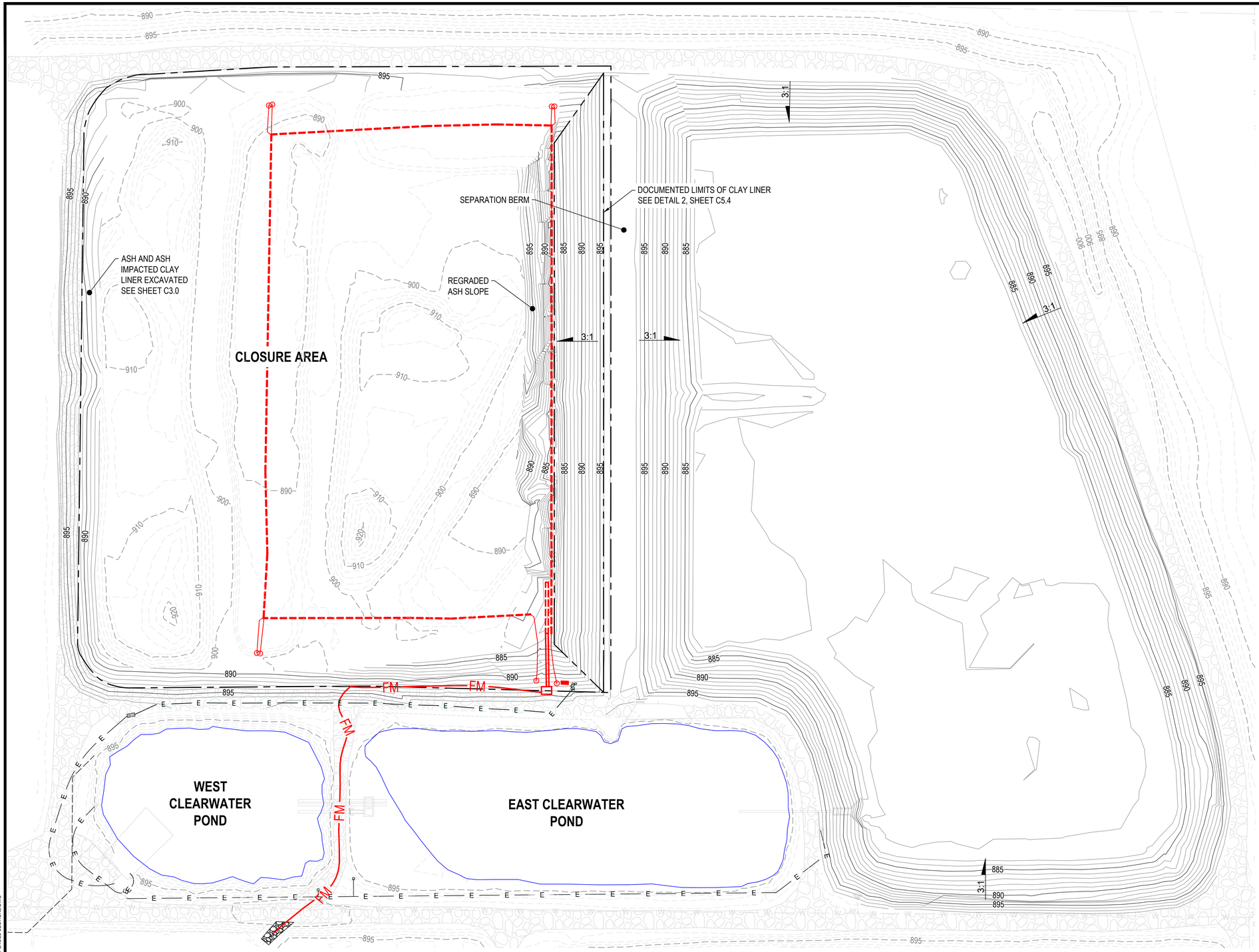

LEGEND:

- PRECONSTRUCTION 5' CONTOUR
- PRECONSTRUCTION 1' CONTOUR
- DOCUMENTED 5' CONTOUR
- DOCUMENTED 1' CONTOUR
- ×897.5 DOCUMENTED SPOT ELEVATION
- ASH CONTACT WATER COLLECTION PIPE
- ASH CONTACT WATER SYSTEM CLEANOUT
- FM ASH CONTACT WATER FORCEMAIN
- LIMITS OF CLOSURE AREA
- DOCUMENTED LIMITS OF CLAY LINER

40 0 40 80
SCALE FEET

NOTES:

1. DOCUMENTED GRADES OUTSIDE OF THE CLOSURE AREA REPRESENT A COMPOSITE OF BOTTOM OF EXCAVATION GRADES (C3.0) AND SEPARATION BERM GRADES.
2. DOCUMENTED GRADES WITHIN THE CLOSURE AREA REPRESENT THE TOP OF CLAY LINER (PART OF SEPARATION BERM), BOTTOM OF EXCAVATION GRADES, AND THE REGRADED ASH SLOPE.

REV:	DATE	CK. BY

SHEET TITLE
DOCUMENTED SEPARATION BERM GRADES

PROJECT TITLE
CONSTRUCTION DOCUMENTATION ASH POND CLOSURE

CLIENT
AMES MUNICIPAL ELECTRIC SYSTEM STEAM ELECTRIC PLANT

200 EAST 5TH STREET AMES, IOWA 50010

SCS ENGINEERS
1690 All-State Court, Suite 100
West Des Moines, IA 50265
PH. (515) 631-6160 FAX. (913) 681-0012

PROJ. NO.	DSN. BY:	DWN. BY:	CHK. BY:	QUALKNOW BY:	PROJ. MGR:
27219356.02	MRK	MRK	MRS	MRH	MRS

CADD FILE:
C3.4 CROSS SECTIONS.DWG

DATE:
10/6/25

DRAWING NO.
C3.1

G:\PROJECT\27219356.02\AUTOCAD\SHEETS\C3.4 CROSS SECTIONS.DWG

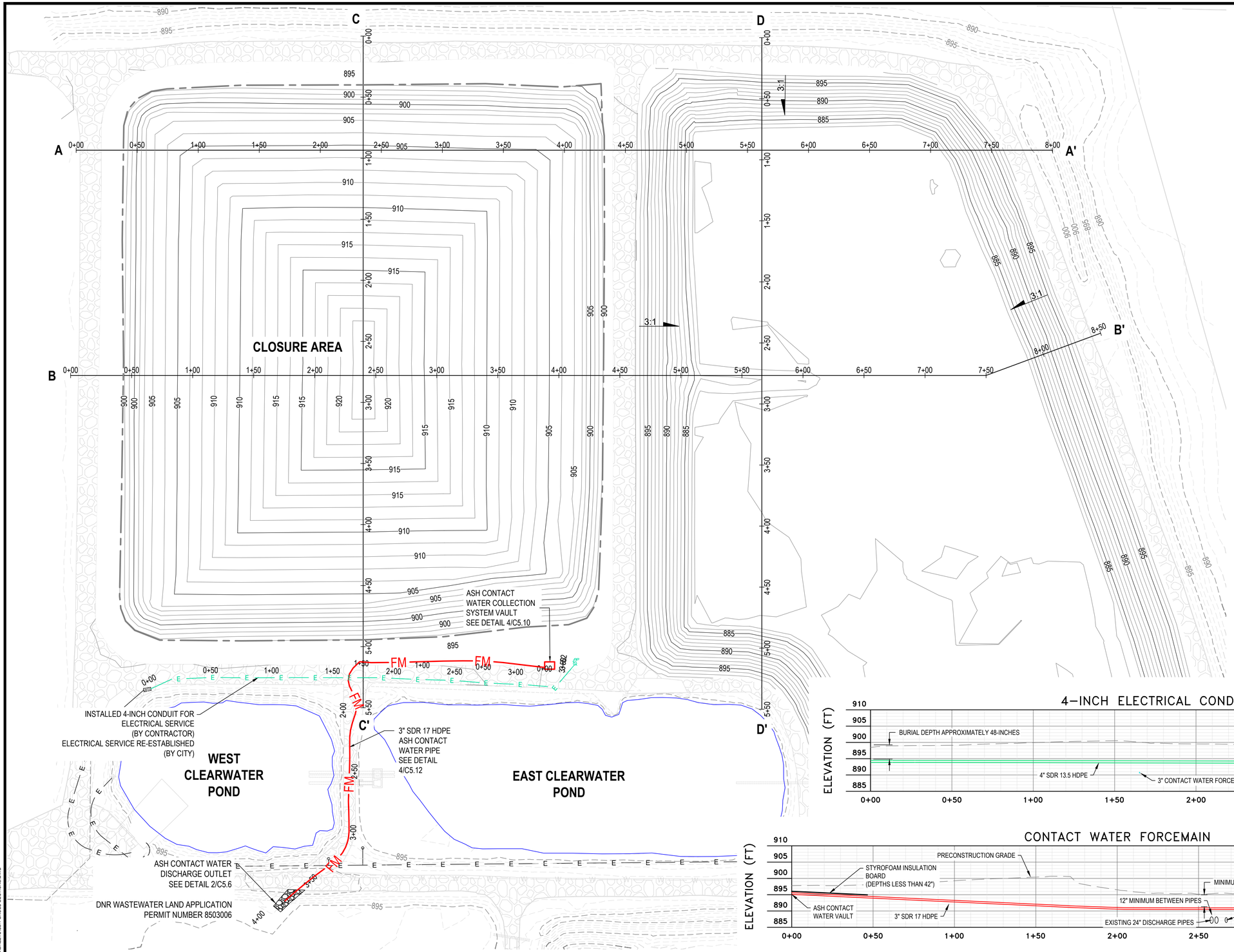

LEGEND:

- 890 — DOCUMENTED 5' CONTOUR
- 886 — DOCUMENTED 1' CONTOUR
- ×897.5 — DOCUMENTED SPOT ELEVATION
- FM — ASH CONTACT WATER FORCEMAIN
- LIMITS OF ASH

40 0 40 80
SCALE FEET

NOTES:

1. DOCUMENTED GRADES OUTSIDE OF CLOSURE AREA REPRESENT A COMPOSITE OF BOTTOM OF EXCAVATION GRADES (C3.0) AND RESTORATION GRADES (ACCESS ROAD, TOPSOIL, GENERAL FILL, ETC.)
2. DOCUMENTED GRADES WITHIN CLOSURE AREA REPRESENT THE TOP OF ASH GRADES DOCUMENTED BY SCS FIELD SURVEY ON MAY 23, 2025. SEE FIGURE 4 FOR SURVEY LOCATIONS AND TABLE 6 FOR DOCUMENTED ELEVATIONS.

REV.	DATE	CK. BY

SHEET TITLE: **DOCUMENTED TOP OF ASH GRADES**

PROJECT TITLE: **CONSTRUCTION DOCUMENTATION ASH POND CLOSURE**

CLIENT: **AMES MUNICIPAL ELECTRIC SYSTEM STEAM ELECTRIC PLANT**
200 EAST 5TH STREET
AMES, IOWA 50010

SCS ENGINEERS
1690 All-State Court, Suite 100
West Des Moines, IA 50265
PH. (515) 631-8160 FAX. (515) 681-0012

PROJ. NO.	DSN. BY:	DWN. BY:	CHK. BY:	QA/QC BY:	PROJ. MGR
27219356.02	MRK	MRK	MRS	MRH	MRS

CADD FILE: C3.4 CROSS SECTIONS.DWG

DATE: 10/6/25

DRAWING NO. **C3.2**

G:\PROJECT\27219356.02\AUTOCAD\SHEETS\C3.4 CROSS SECTIONS.DWG

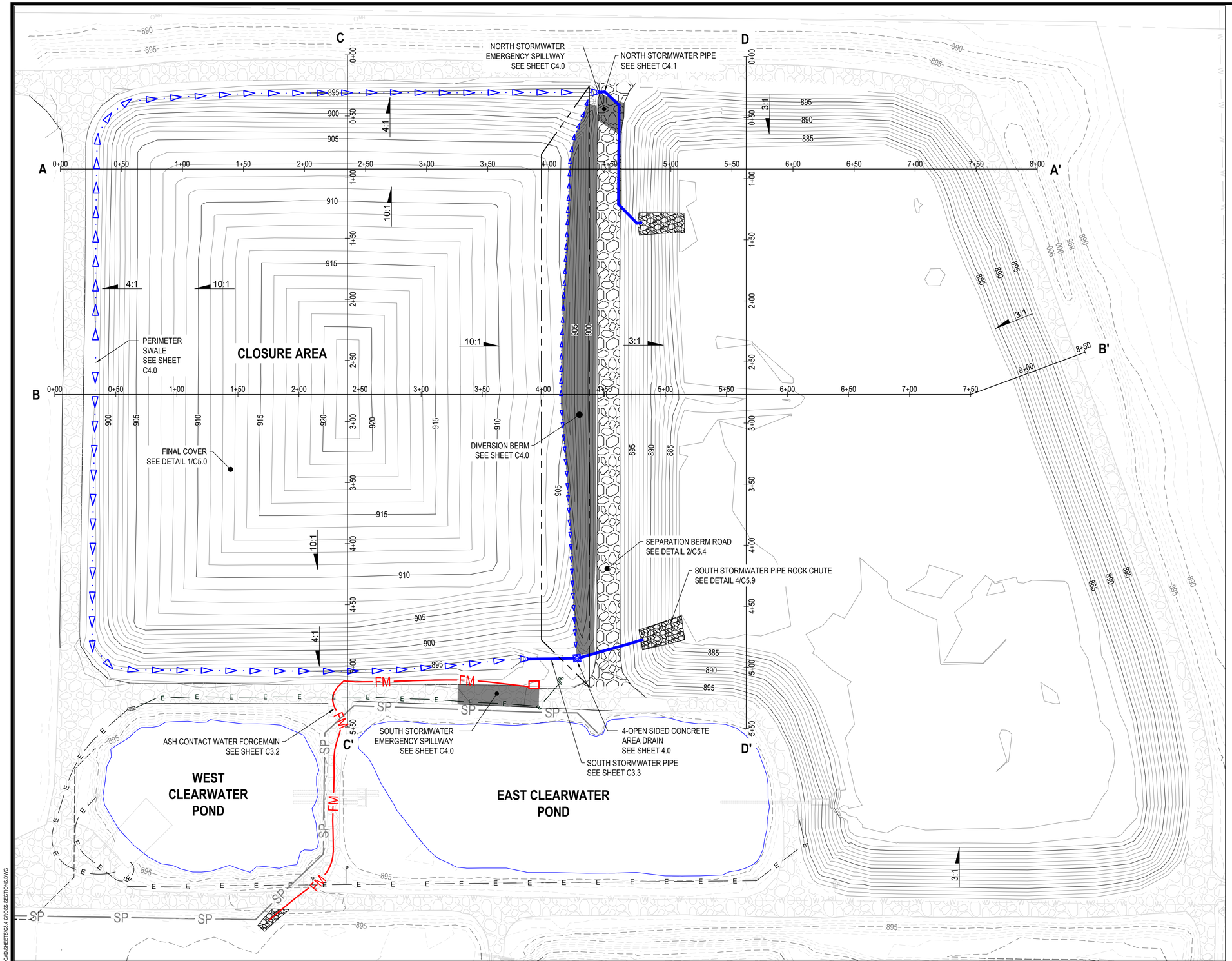

LEGEND:

- PRECONSTRUCTION 5' CONTOUR
- PRECONSTRUCTION 1' CONTOUR
- DOCUMENTED 5' CONTOUR
- DOCUMENTED 1' CONTOUR
- ASH CONTACT WATER FORCEMAIN
- EXISTING SLUICE PIPE
- STORMWATER PIPE
- PERIMETER SWALE FLOWLINE
- PERIMETER DIVERSION BERM FLOWLINE
- ACCESS ROAD
- DIVERSION BERM OR EMERGENCY SPILLWAY APPROXIMATE FOOTPRINT
- EROSION STONE

40 0 40 80
SCALE FEET

NOTES:

1. DOCUMENTED GRADES OUTSIDE OF CLOSURE AREA REPRESENT A COMPOSITE OF BOTTOM OF EXCAVATION GRADES (C3.0) AND RESTORATION GRADES (ACCESS ROADS, TOPSOIL, GENERAL FILL, ETC.). GRADES AROUND ROCK CHUTES MAY VARY.
2. DOCUMENTED GRADES WITHIN CLOSURE AREA REPRESENT THE TOP OF FINAL COVER (TOP OF TOPSOIL) DOCUMENTED BY SCS FIELD SURVEY ON JUNE 24, 2025. SEE FIGURE 4 FOR SURVEY LOCATIONS AND TABLE 6 FOR DOCUMENTED ELEVATIONS.
3. SEE SHEET C3.5 AND C3.6 FOR CROSS SECTIONS.

REV.	DATE	CK. BY

SHEET TITLE
DOCUMENTED FINAL GRADES

PROJECT TITLE
CONSTRUCTION DOCUMENTATION
ASH POND CLOSURE

CLIENT
AMES MUNICIPAL ELECTRIC SYSTEM
STEAM ELECTRIC PLANT
200 EAST 5TH STREET
AMES, IOWA 50010

SCS ENGINEERS
1690 All-State Court, Suite 100
West Des Moines, IA 50265
PH. (515) 631-6160 FAX. (515) 681-0012

PROJ. NO.	DSN. BY:	DWN. BY:	CHK. BY:	QA REVW BY:	PROJ. MGR:
27219356.02	MRK	MRK	MRS	MRH	MRS

CADD FILE:
C3.4 CROSS SECTIONS.DWG

DATE:
10/6/25

DRAWING NO.
C3.3

G:\PROJECT\27219356.02\AUTOCAD\SHEETS\C3.4 CROSS SECTIONS.DWG

A-A'

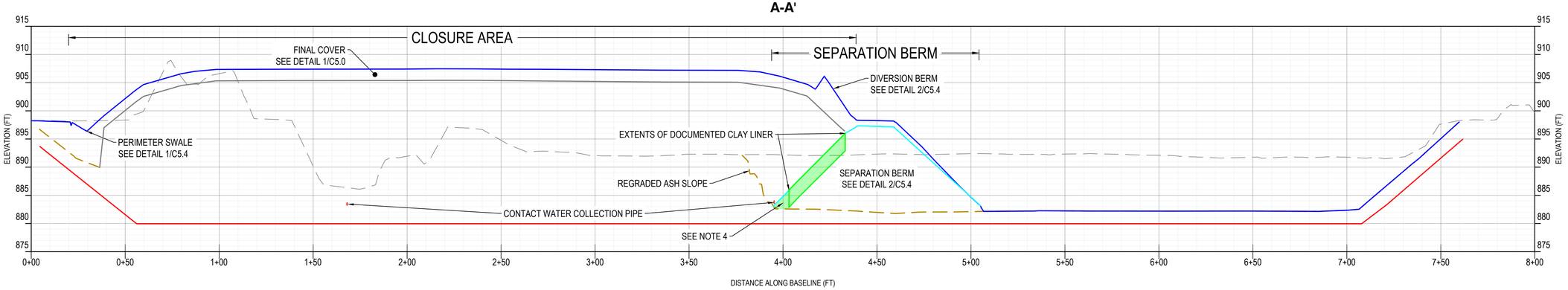

PROFILE SCALE:
HORIZ: 1"=30'
VERT: 1"=10'

LEGEND

- PRE-CONSTRUCTION GRADE
- DOCUMENTED EXTENTS OF EXCAVATION
- DOCUMENTED 3-FOOT CLAY LINER IN SEPARATION BERM
- DOCUMENTED TOP OF ASH
- DOCUMENTED TOP OF SEPARATION BERM
- DOCUMENTED FINAL GRADES
- BOTTOM OF EXISTING ASH POND LINER GRADES

NOTES:

1. DOCUMENTED FINAL GRADES OUTSIDE OF CLOSURE AREA REPRESENT A COMPOSITE OF BOTTOM OF EXCAVATION GRADES (C3.0) AND RESTORATION GRADES (ACCESS ROADS, TOPSOIL, GENERAL FILL, ETC.).
2. DOCUMENTED FINAL GRADES WITHIN CLOSURE AREA REPRESENT THE TOP OF FINAL COVER (TOP OF TOPSOIL) DOCUMENTED BY SCS FIELD SURVEY ON JUNE 24, 2025. SEE FIGURE 4 FOR SURVEY LOCATIONS AND TABLE 6 FOR DOCUMENTED ELEVATIONS.
3. SEE SHEET C3.3 FOR CROSS SECTION LOCATIONS.
4. THE CLAY LINER EXTENDED TO THE EXISTING POND CLAY LINER. THE THICKNESS WAS DOCUMENTED TO THE WESTERNMOST EDGE OF 3 FEET OF CONSTRUCTED LINER.

B-B'

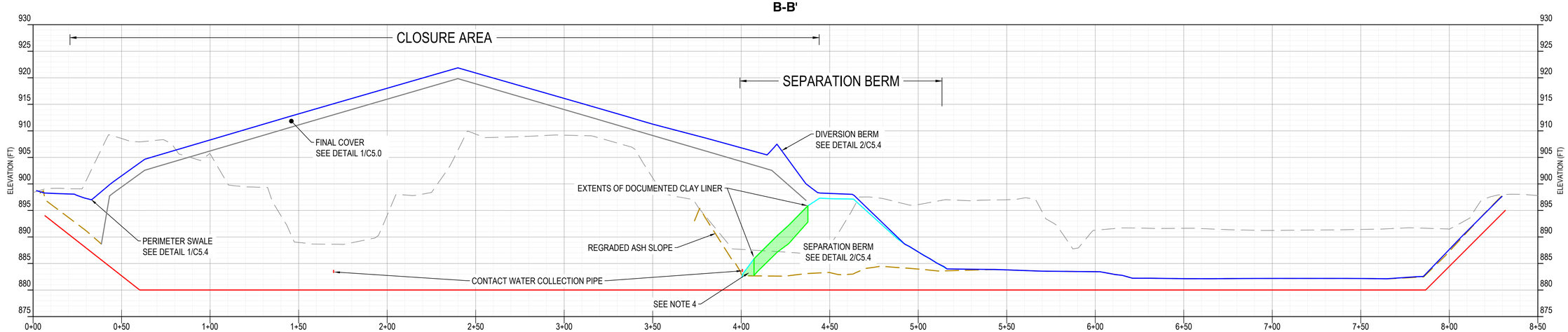

PROFILE SCALE:
HORIZ: 1"=30'
VERT: 1"=10'

REV.	DATE	CK. BY

SHEET TITLE
CROSS SECTIONS

PROJECT TITLE
CONSTRUCTION DOCUMENTATION ASH POND CLOSURE

CLIENT
AMES MUNICIPAL ELECTRIC SYSTEM STEAM ELECTRIC PLANT
200 EAST 5TH STREET AMES, IOWA 50010

SCS ENGINEERS
1690 All-State Court, Suite 100
West Des Moines, IA 50265
PH. (515) 631-6160 FAX. (913) 681-0012

PROJ. NO.	DSN. BY:	DWN. BY:	CHK. BY:	QA/QC BY:	PROJ. MGR:
27219356.02	MRK	MRK	MRS	MRH	MRS

CADD FILE:
C3.4 CROSS SECTIONS.DWG

DATE:
10/6/25

DRAWING NO.
C3.5

G:\PROJECT\27219356.02\AUTOCAD\SHEETS\C3.4 CROSS SECTIONS.DWG

C-C'

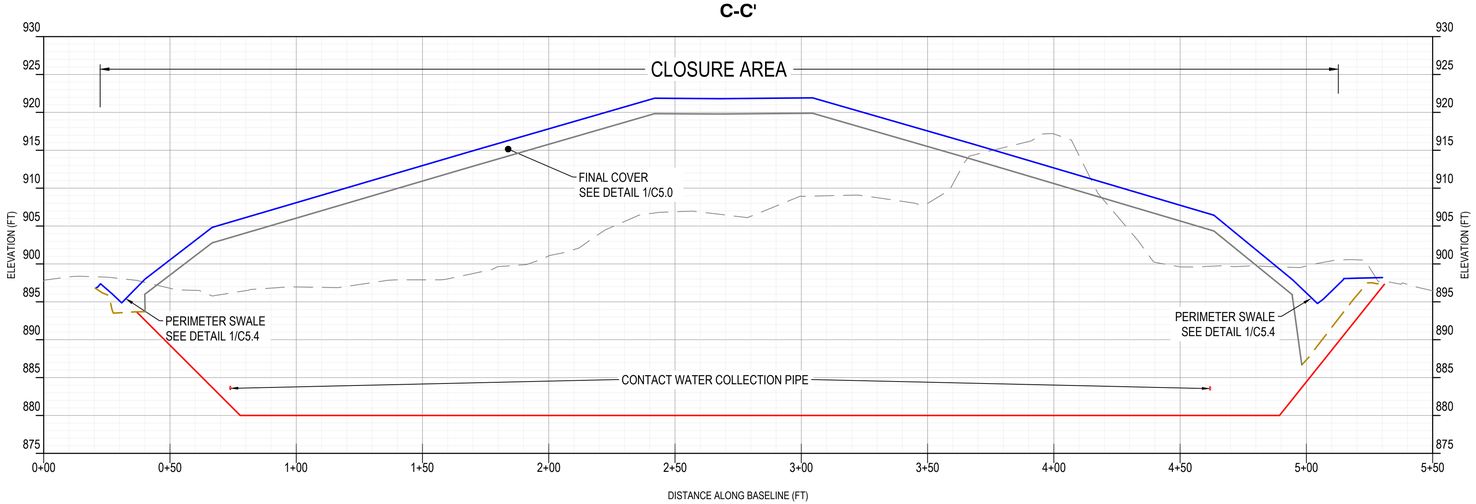

PROFILE SCALE:
HORIZ: 1"=30'
VERT: 1"=10'

D-D'

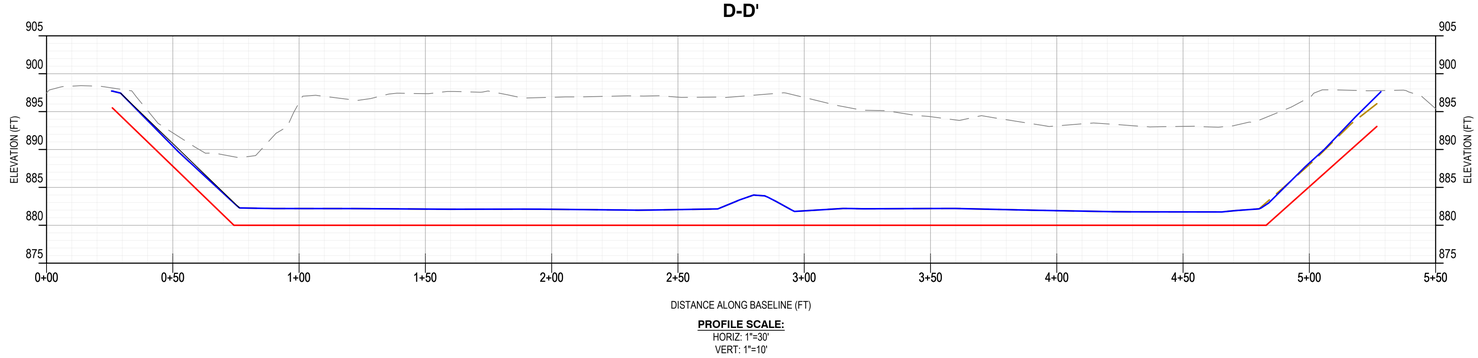

PROFILE SCALE:
HORIZ: 1"=30'
VERT: 1"=10'

LEGEND

- PRE-CONSTRUCTION GRADE
- DOCUMENTED EXTENTS OF EXCAVATION
- DOCUMENTED TOP OF ASH
- DOCUMENTED FINAL GRADES
- BOTTOM OF EXISTING ASH POND LINER GRADES

NOTES:

1. DOCUMENTED FINAL GRADES OUTSIDE OF CLOSURE AREA REPRESENT A COMPOSITE OF BOTTOM OF EXCAVATION GRADES (C3.0) AND RESTORATION GRADES (ACCESS ROADS, TOPSOIL, GENERAL FILL, ETC.).
2. DOCUMENTED FINAL GRADES WITHIN CLOSURE AREA REPRESENT THE TOP OF FINAL COVER (TOP OF TOPSOIL) DOCUMENTED BY SCS FIELD SURVEY ON JUNE 24, 2025. SEE FIGURE 4 FOR SURVEY LOCATIONS AND TABLE 6 FOR DOCUMENTED ELEVATIONS.
3. SEE SHEET C3.3 FOR CROSS SECTION LOCATIONS.

REV.	DATE	CK. BY
1		
2		
3		
4		
5		

SHEET TITLE
CROSS SECTIONS

PROJECT TITLE
CONSTRUCTION DOCUMENTATION ASH POND CLOSURE

CLIENT
AMES MUNICIPAL ELECTRIC SYSTEM STEAM ELECTRIC PLANT
200 EAST 5TH STREET AMES, IOWA 50010

SCS ENGINEERS
1690 All-State Court, Suite 100
West Des Moines, IA 50265
PH. (515) 631-6160 FAX. (913) 681-0012

PROJ. NO.	DWN. BY:	CHK BY:	DSN. BY:	PROJ. MGR:
27219356.02	MRK	MRS	MRK	MRS

CADD FILE:
C3.4 CROSS SECTIONS.DWG

DATE:
10/6/25

DRAWING NO.
C3.6

G:\PROJECT\27219356.02\AUTOCAD\SHEETS\C3.4 CROSS SECTIONS.DWG

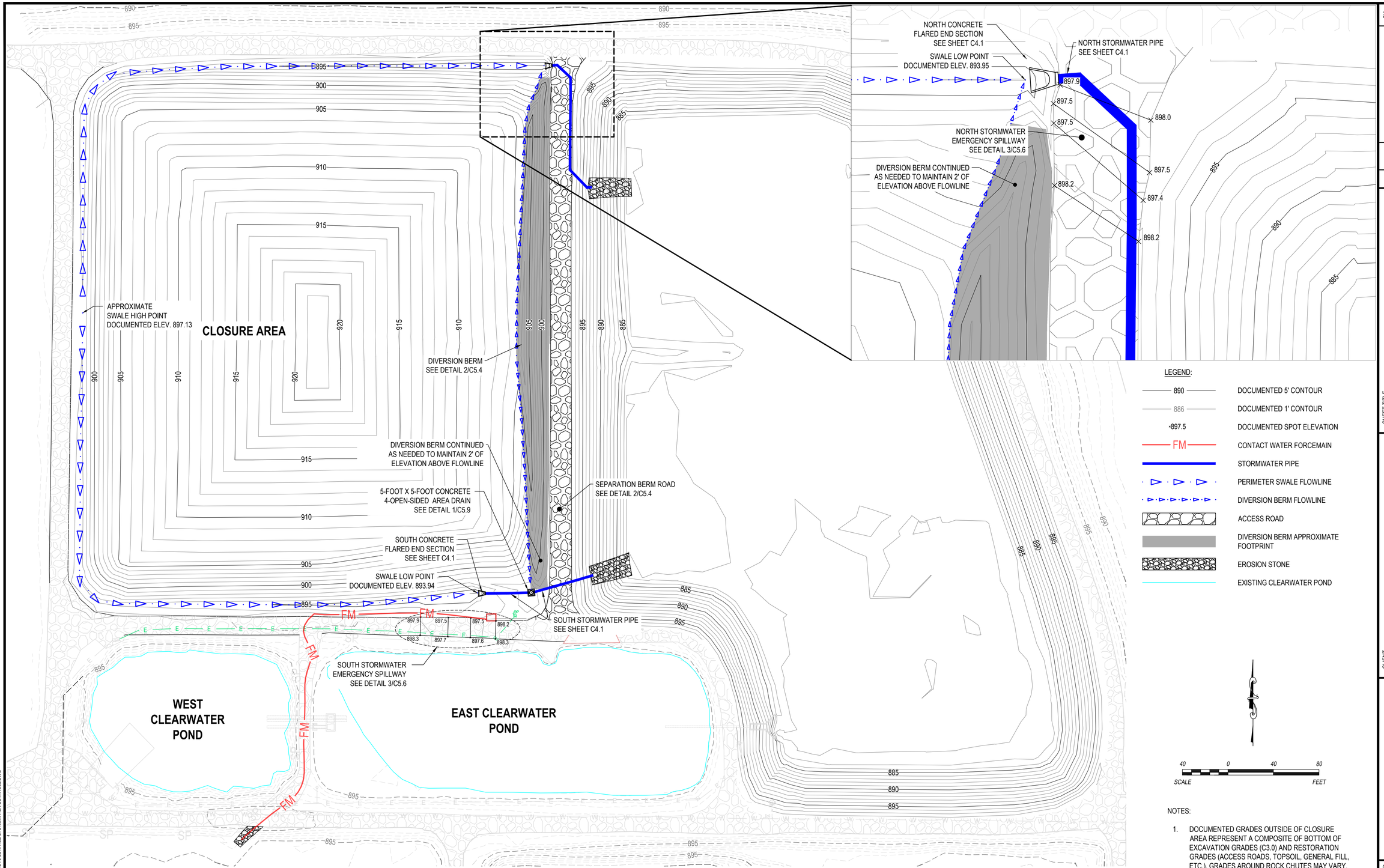

NOTES:

1. DOCUMENTED GRADES OUTSIDE OF CLOSURE AREA REPRESENT A COMPOSITE OF BOTTOM OF EXCAVATION GRADES (C3.0) AND RESTORATION GRADES (ACCESS ROADS, TOPSOIL, GENERAL FILL, ETC.). GRADES AROUND ROCK CHUTES MAY VARY.
2. DOCUMENTED GRADES WITHIN CLOSURE AREA REPRESENT THE TOP OF FINAL COVER (TOP OF TOPSOIL) DOCUMENTED BY SCS FIELD SURVEY ON JUNE 24, 2025. SEE FIGURE 4 FOR SURVEY LOCATIONS AND TABLE 6 FOR DOCUMENTED ELEVATIONS.

REV.	DATE	CK BY

SHEET TITLE
SURFACE STORMWATER CONTROLS

PROJECT TITLE
CONSTRUCTION DOCUMENTATION ASH POND CLOSURE

CLIENT
AMES MUNICIPAL ELECTRIC SYSTEM STEAM ELECTRIC PLANT

200 EAST 5TH STREET AMES, IOWA 50010

SCS ENGINEERS
1690 All-State Court, Suite 100
West Des Moines, IA 50265
PH. (515) 631-6160 FAX. (913) 681-0012

PROJ. NO.	DSN. BY:	DWN. BY:	CHK. BY:	QA/ QC BY:	PROJ. MGR
27219356.02	MRK	MRK	MRS	MRH	MRS

CADD FILE:
C4.0 SURFACE STORMWATER CONTROLS.DWG

DATE:
10/6/25

DRAWING NO.
C4.0

G:\PROJECT\27219356.02\AUTOCAD\SHEETS\C4.0 SURFACE STORMWATER CONTROLS.DWG

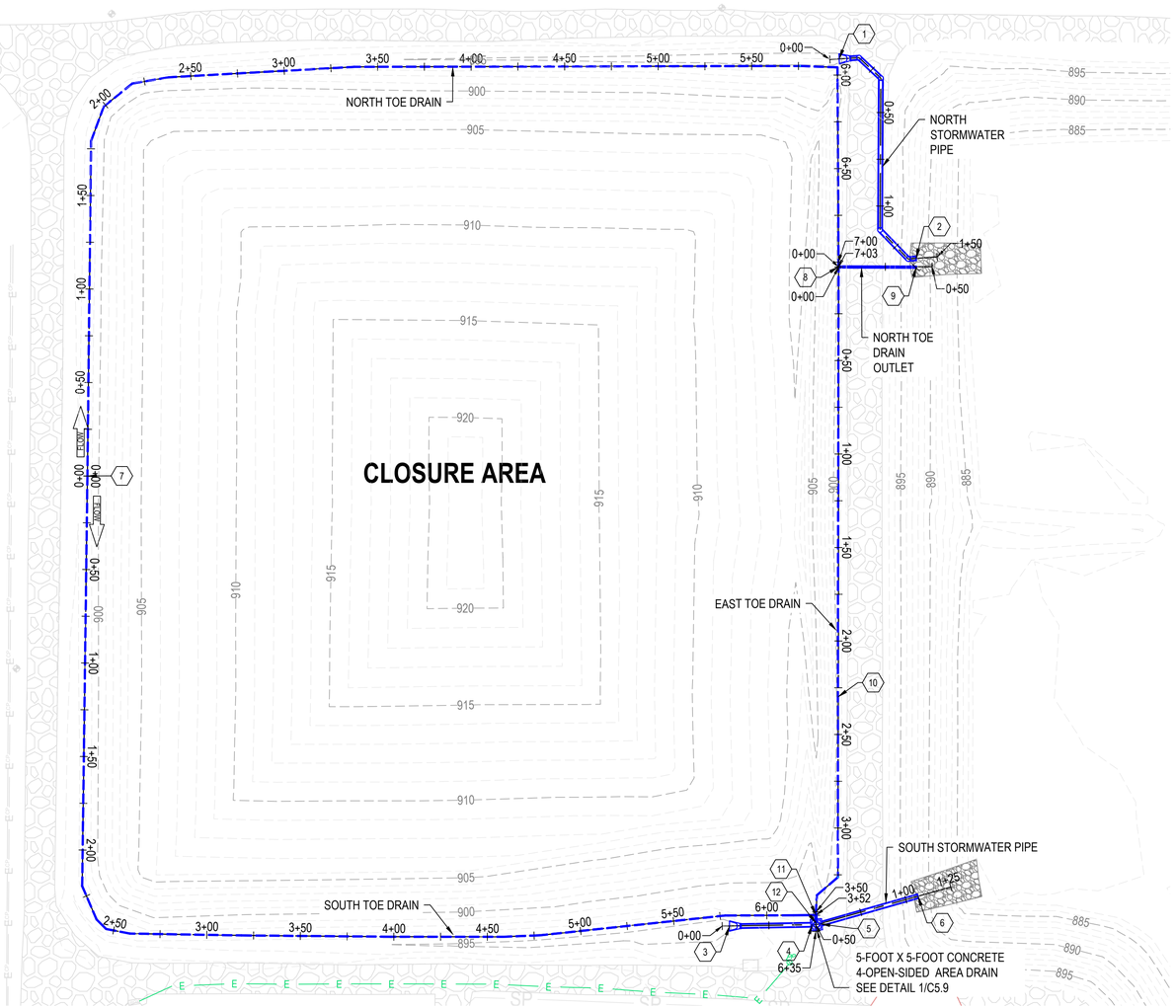

LEGEND:

- DOCUMENTED 5' CONTOUR
- DOCUMENTED 1' CONTOUR
- TOE DRAIN
- OUTLET / STORMWATER PIPE

40 0 40 80
SCALE FEET

North Toe Drain Outlet

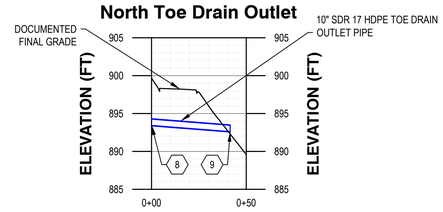

PROFILE SCALE:
HORIZ: 1"=40'
VERT: 1"=10'

North Stormwater Pipe

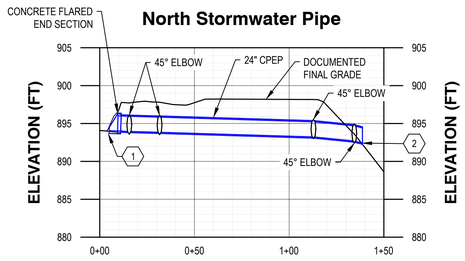

PROFILE SCALE:
HORIZ: 1"=40'
VERT: 1"=10'

South Stormwater Pipe

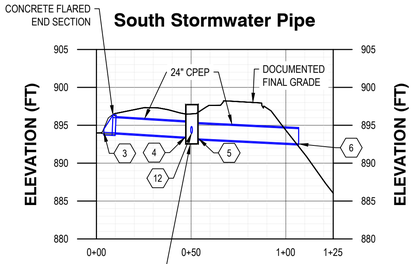

PROFILE SCALE:
HORIZ: 1"=40'
VERT: 1"=10'

East Toe Drain

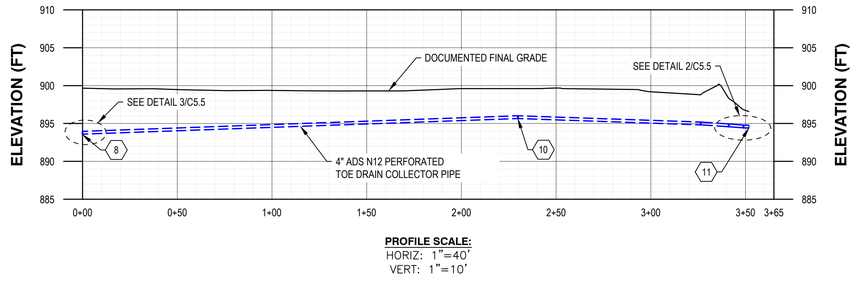

PROFILE SCALE:
HORIZ: 1"=40'
VERT: 1"=10'

North Toe Drain

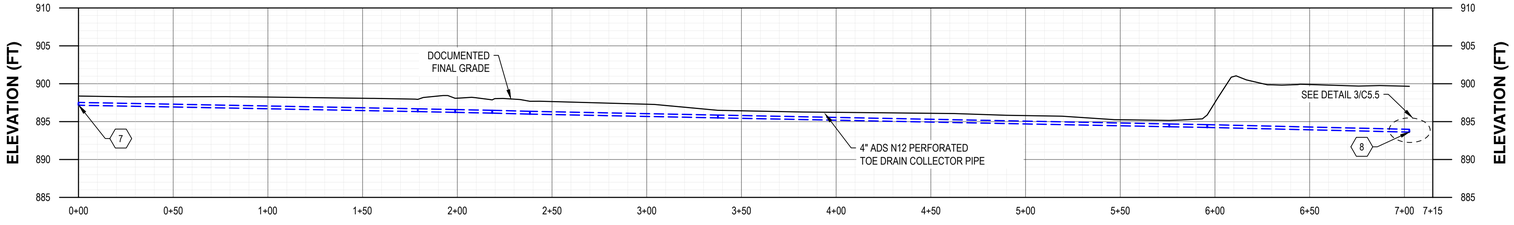

PROFILE SCALE:
HORIZ: 1"=40'
VERT: 1"=10'

South Toe Drain

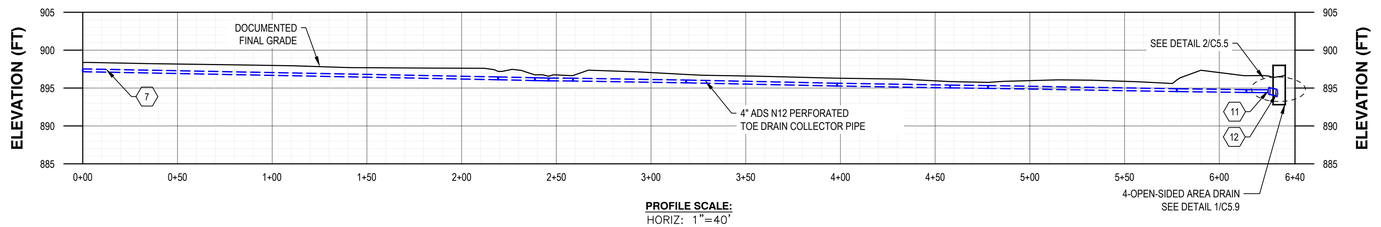

PROFILE SCALE:
HORIZ: 1"=40'
VERT: 1"=10'

KEYNOTE TABLE		
NUMBER	**DOCUMENTED INVERT ELEVATION**	**DESCRIPTION**
1	894.04	NORTH STORMWATER PIPE INLET (DETAIL 4/C5.5)
2	892.41	NORTH STORMWATER PIPE OUTLET (DETAIL 4/C5.5)
3	894.07	SOUTH STORMWATER PIPE INLET (DETAIL 5/C5.5)
4	893.41	SOUTH STORMWATER PIPE INTO STRUCTURE (DETAIL 1/C5.9)
5	893.22	SOUTH STORMWATER PIPE OUT OF STRUCTURE (DETAIL 1/C5.9)
6	892.55	SOUTH STORMWATER PIPE OUTLET (DETAIL 5/C5.5)
7	897.18	NORTH AND SOUTH TOE DRAIN HIGHPOINT
8	893.43	NORTH/EAST TOE DRAIN OUTLET TEE (DETAIL 3/C5.5)
9	892.62	NORTH/EAST TOE DRAIN OUTLET (DETAIL 1/C5.6)
10	895.67	EAST TOE DRAIN HIGHPOINT
11	894.20	SOUTH/EAST TOE DRAIN OUTLET TEE (DETAIL 2/C5.5)
12	893.99	SOUTH/EAST TOE DRAIN OUTLET (DETAIL 2/C5.9)

REV:	DATE	CK BY

SHEET TITLE
SUBSURFACE STORMWATER CONTROLS

PROJECT TITLE
CONSTRUCTION DOCUMENTATION ASH POND CLOSURE

CLIENT
AMES MUNICIPAL ELECTRIC SYSTEM STEAM ELECTRIC PLANT
200 EAST 5TH STREET AMES, IOWA 50010

SCS ENGINEERS
1690 Ali-State Court, Suite 100
West Des Moines, IA 50265
PH. (515) 631-6160 FAX. (913) 681-0012

PROJ. NO.	27219356.02
DSN. BY:	MRK
DWN. BY:	MRK
CHK. BY:	MRS
QUA.ENVI.BY:	MRH
PROJ. MGR.	MRS

CADD FILE:
C4.1 SUBSURFACE STORMWATER CONTROLS.DWG

DATE:
10/3/25

DRAWING NO.
C4.1

G:\PROJECT\27219356.02\AUTOCAD\SHEETS\C4.1 SUBSURFACE STORMWATER CONTROLS.DWG

NORTH STORMWATER
EMERGENCY SPILLWAY

CLOSURE AREA

SOUTH STORMWATER
EMERGENCY SPILLWAY

REMAINING
CONCRETE PAD

WEST
CLEARWATER
POND

EAST CLEARWATER
POND

LEGEND:

- 890 — DOCUMENTED 5' CONTOUR
- 886 — DOCUMENTED 1' CONTOUR
- EROSION MAT - VEGETATIVE RESTORATION
- CHANNEL EROSION MAT - VEGETATIVE RESTORATION
- MULCH - VEGETATIVE RESTORATION
- CONSTRUCTED ACCESS ROAD
- RECONSTRUCTED ACCESS ROAD
- EROSION STONE
- PERIMETER SWALE FLOWLINE

40 0 40 80
SCALE FEET

GENERAL FILL STOCKPILE RESTORATION

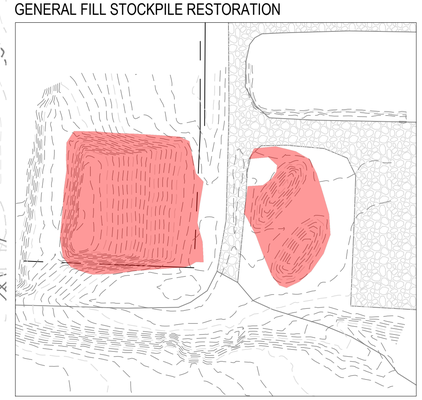

SCALE: 1"=100'

G:\PROJECT\27219356.02\AUTOCAD\SHEETS\DOCUMENTED RESTORATION.DWG

REV.	DATE	CK. BY

SHEET TITLE
DOCUMENTED RESTORATION

PROJECT TITLE
CONSTRUCTION DOCUMENTATION
ASH POND CLOSURE

CLIENT
AMES MUNICIPAL ELECTRIC SYSTEM
STEAM ELECTRIC PLANT
200 EAST 5TH STREET
AMES, IOWA 50010

SCS ENGINEERS
1690 All-State Court, Suite 100
West Des Moines, IA 50265
PH. (515) 631-6160 FAX. (515) 681-0012

PROJ. NO.	DSN. BY:	DWN. BY:	CHK. BY:	QA REVW BY:	PROJ. MGR:
27219356.02	MRK	MRK	MRS	MRH	MRS

CADD FILE:
DOCUMENTED RESTORATION.DWG

DATE:
10/6/25

DRAWING NO.
C4.3

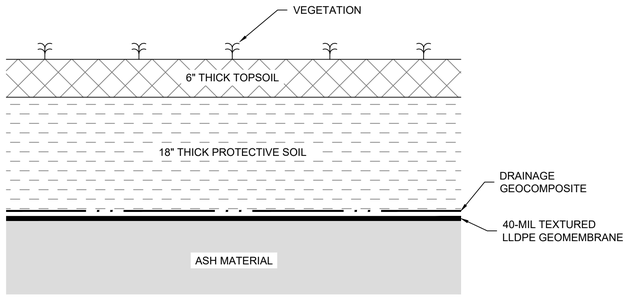

1 FINAL COVER
Not to Scale

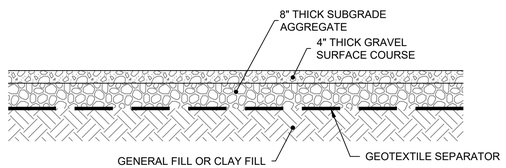

3 ACCESS ROAD
Not to Scale

G:\PROJECT\27219356.02\AUTOCAD\SHEETS\C5.0 DETAILS.DWG

REV.	DATE	CK. BY

SHEET TITLE
DETAILS

PROJECT TITLE
CONSTRUCTION DOCUMENTATION
ASH POND CLOSURE

CLIENT
AMES MUNICIPAL ELECTRIC SYSTEM
STEAM ELECTRIC PLANT
200 EAST 5TH STREET
AMES, IOWA 50010

SCS ENGINEERS
1690 All-State Court, Suite 100
West Des Moines, IA 50265
PH. (515) 631-6160 FAX. (913) 681-0012

PROJ. NO. 27219356.02
DSN. BY: MRK
DWN. BY: MRK
CHK. BY: MRS
QA RVW BY: MRH
PROJ. MGR: MRS

CADD FILE: C5.0 DETAILS.DWG

DATE: 10/3/25

DRAWING NO.
C5.0

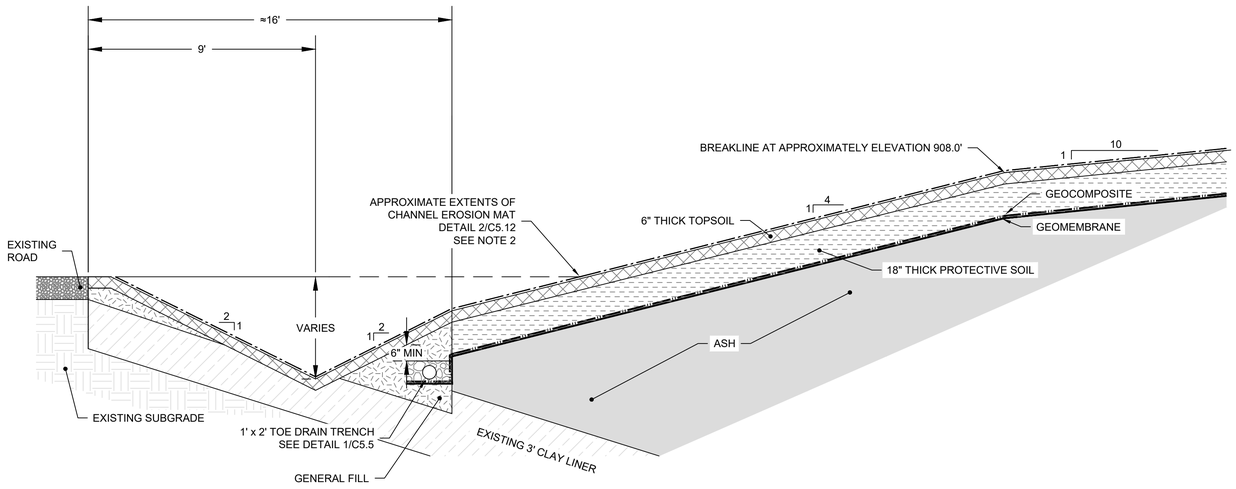

SWALE LOW POINT

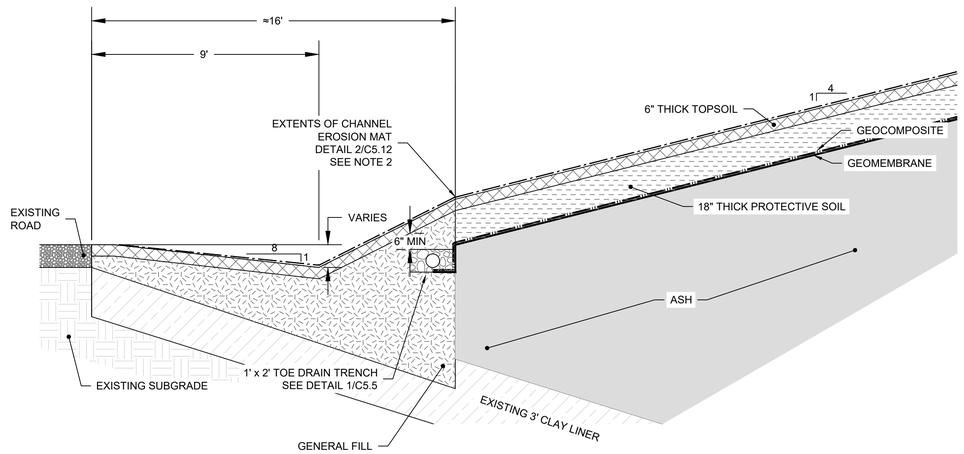

SWALE HIGH POINT

NOTES:

1. EXCAVATED ASH AND THE UPPERMOST 1' OF EXISTING CLAY LINER TO THE INNER MOST EDGE OF THE ANCHOR TRENCH. PLACE EXCAVATED MATERIALS WITHIN THE LIMITS OF ASH. SEE SHEET C3.2.
2. EXTENDED CHANNEL EROSION MAT TO AN ELEVATION EQUAL TO OR HIGHER THAN THE ROAD ELEVATION OR TO THE TOP OF THE 2:1 SLOPE, WHICHEVER IS HIGHER.

1 PERIMETER SWALE

Not to Scale

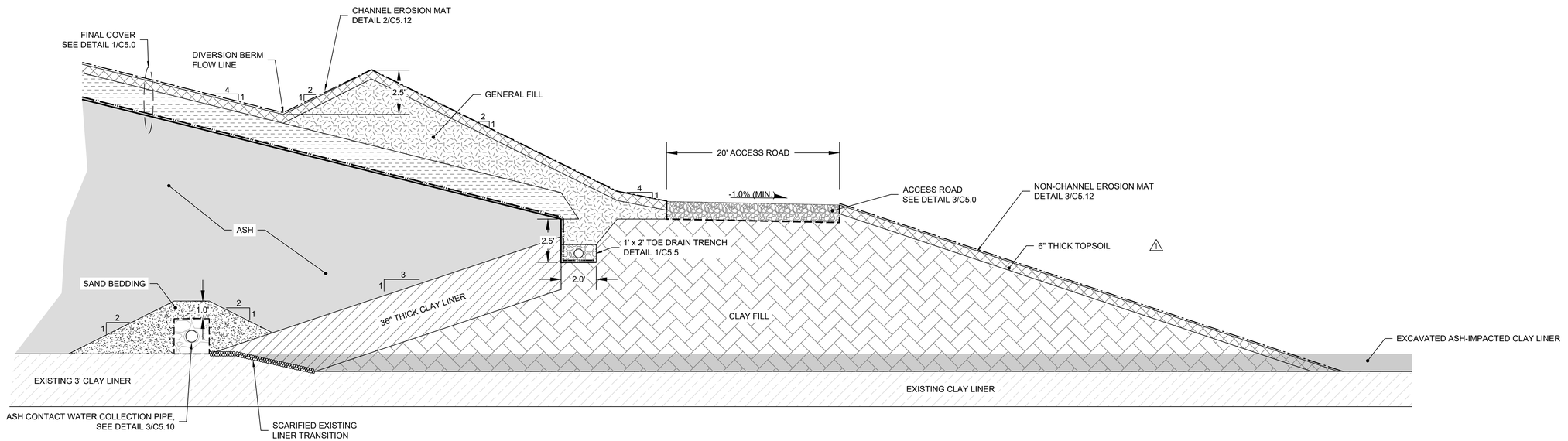

2 SEPARATION BERM

Not to Scale

REV.	DATE	CK BY

SHEET TITLE: **DETAILS**

PROJECT TITLE: **CONSTRUCTION DOCUMENTATION ASH POND CLOSURE**

CLIENT: **AMES MUNICIPAL ELECTRIC SYSTEM STEAM ELECTRIC PLANT**

200 EAST 5TH STREET AMES, IOWA 50010

SCS ENGINEERS
1690 All-State Court, Suite 100
West Des Moines, IA 50265
PH. (515) 631-6160 FAX. (913) 681-0012

PROJ. NO.	DSN. BY:	DWN. BY:	CHK. BY:	QUALKNOW BY:	PROJ. MGR.
27219356.02	MRK	MRK	MRS	MRH	MRS

CADD FILE: C5.4 DETAILS.DWG

DATE: 10/3/25

DRAWING NO. **C5.4**

G:\PROJECT\27219356.02\AUTOCAD\SHEETS\C5.4 DETAILS.DWG

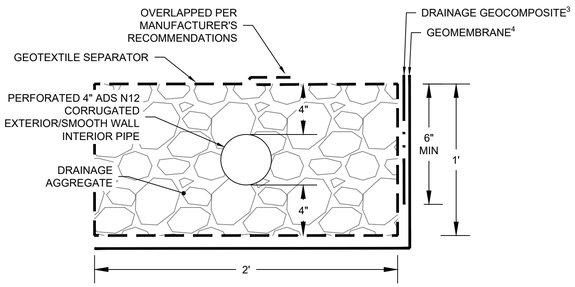

1 TOE DRAIN
Not to Scale

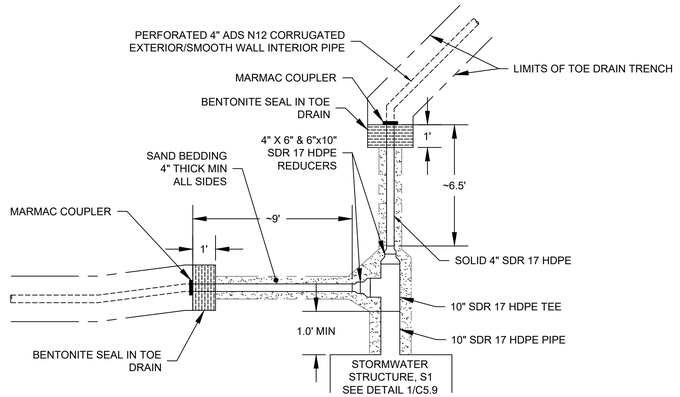

2 SOUTH/EAST TOE DRAIN OUTLET TEE
Not to Scale

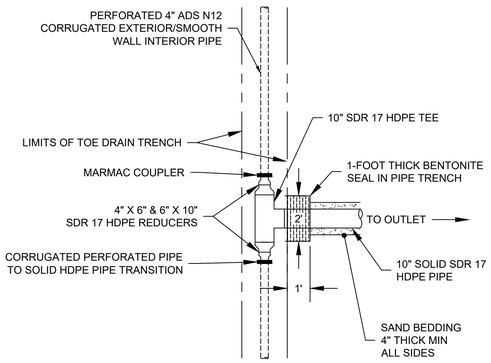

3 NORTH/EAST TOE DRAIN OUTLET TEE
Not to Scale

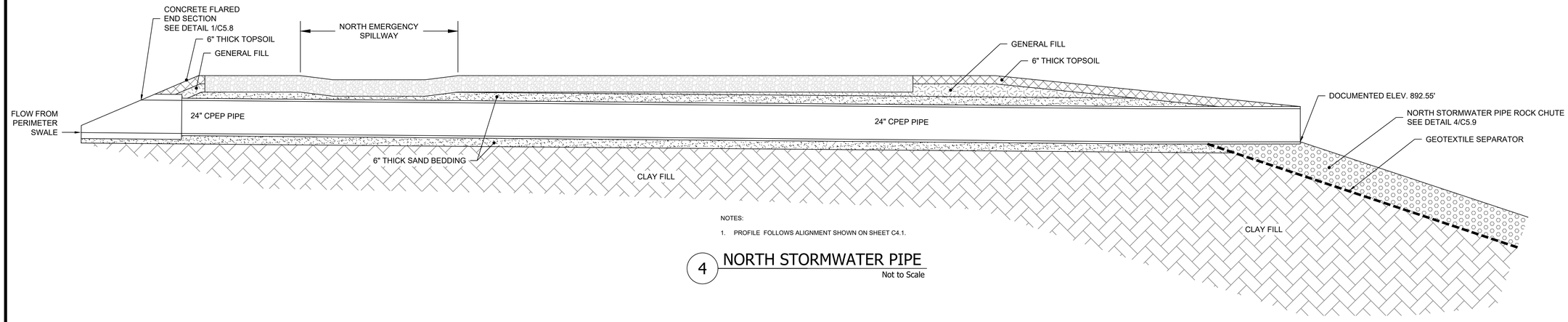

NOTES:
1. PROFILE FOLLOWS ALIGNMENT SHOWN ON SHEET C4.1.

4 NORTH STORMWATER PIPE
Not to Scale

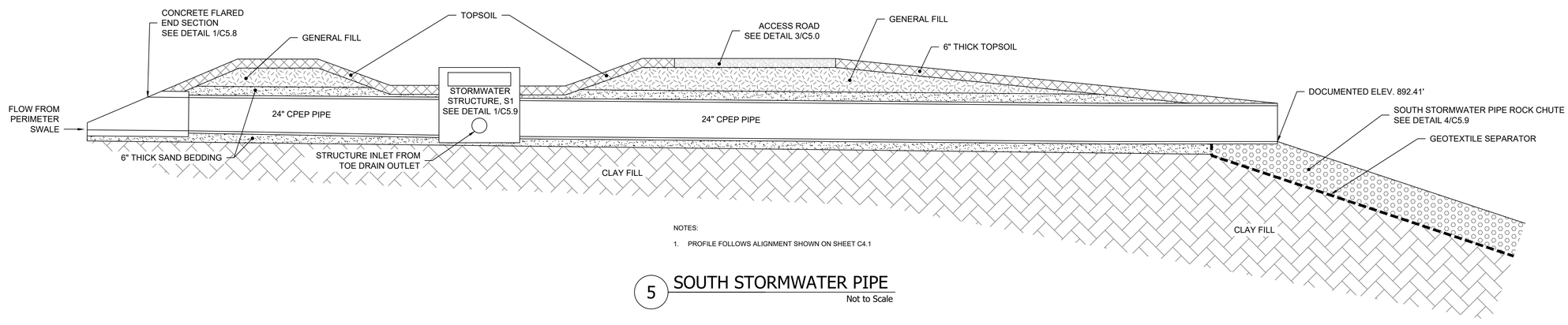

NOTES:
1. PROFILE FOLLOWS ALIGNMENT SHOWN ON SHEET C4.1

5 SOUTH STORMWATER PIPE
Not to Scale

G:\PROJECT\27219356.02\AUTOCAD\SHEETS\C5.5 DETAILS.DWG

REV.	DATE	CK. BY

SHEET TITLE
DETAILS

PROJECT TITLE
CONSTRUCTION DOCUMENTATION
ASH POND CLOSURE

CLIENT
AMES MUNICIPAL ELECTRIC SYSTEM
STEAM ELECTRIC PLANT
200 EAST 5TH STREET
AMES, IOWA 50010

SCS ENGINEERS
1690 All-State Court, Suite 100
West Des Moines, IA 50265
PH. (515) 631-6160 FAX. (913) 681-0012

PROJ. NO. 27219356.02 | DSN. BY: MRK | DWN. BY: MRK | CHK. BY: MRS | QA RVW BY: MRH | PROJ. MGR: MRS

CADD FILE: C5.5 DETAILS.DWG

DATE: 10/3/25

DRAWING NO.
C5.5

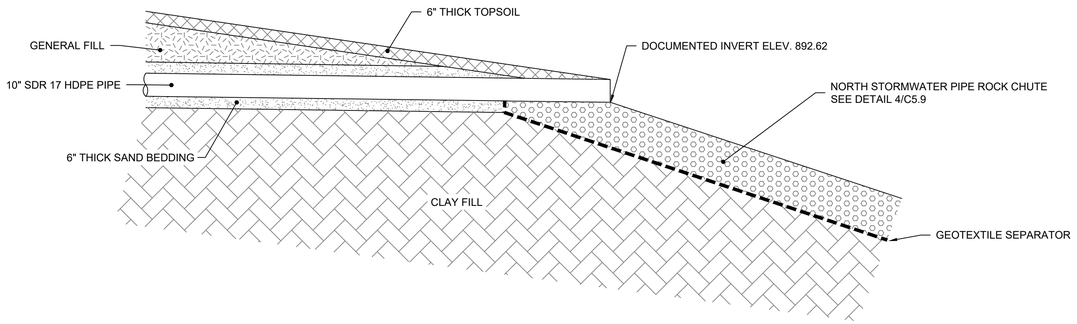

1 TOE DRAIN OUTLET
Not to Scale

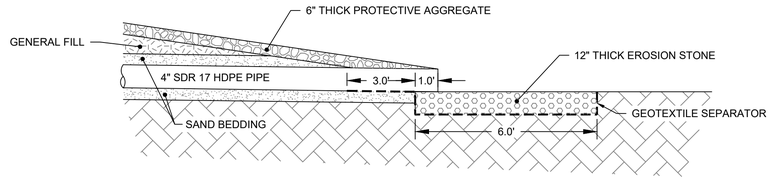

2 ASH CONTACT WATER DISCHARGE OUTLET
Not to Scale

3 STORMWATER EMERGENCY SPILLWAY
Not to Scale

REV.	DATE	CK BY

SHEET TITLE
DETAILS

PROJECT TITLE
CONSTRUCTION DOCUMENTATION
ASH POND CLOSURE

CLIENT
AMES MUNICIPAL ELECTRIC SYSTEM
STEAM ELECTRIC PLANT
200 EAST 5TH STREET
AMES, IOWA 50010

SCS ENGINEERS
1690 All-State Court, Suite 100
West Des Moines, IA 50265
PH. (515) 631-6160 FAX. (913) 681-0012

PROJ. NO.	DWN. BY:	CK'D/QW BY:
27219356.02	MRK	MRH
DSN. BY:	CHK BY:	PROJ. MGR:
MRK	MRS	MRS

CADD FILE:
C5.6 DETAILS.DWG

DATE:
10/6/25

DRAWING NO.
C5.6

G:\PROJECT\27219356.02\AUTOCAD\SHEETS\C5.6 DETAILS.DWG

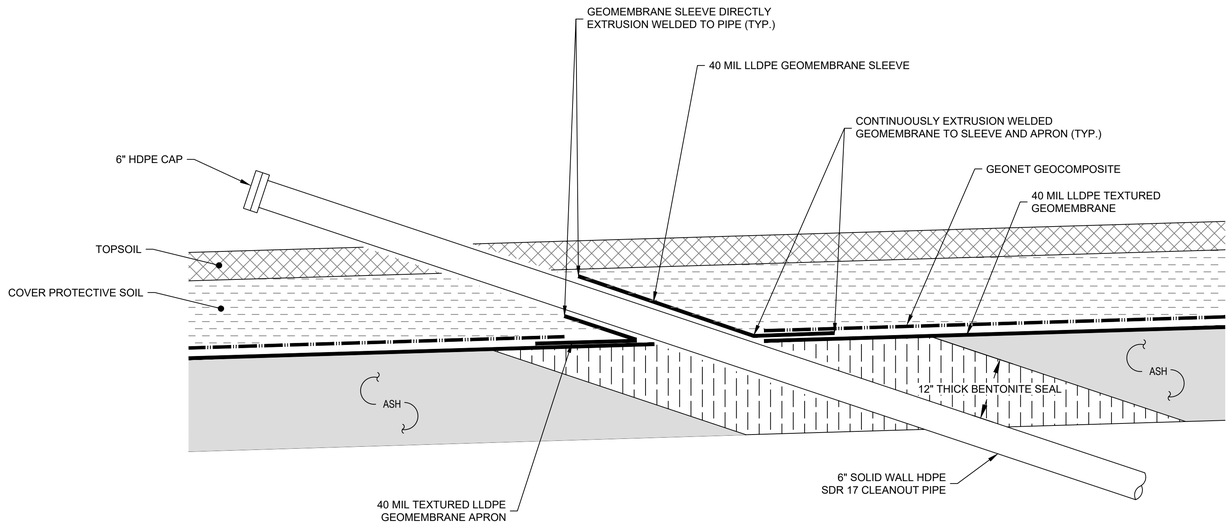

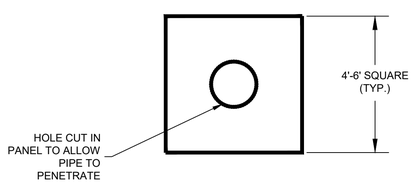

GEOMEMBRANE APRON

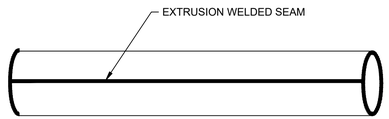

GEOMEMBRANE SLEEVE

1 GEOMEMBRANE PIPE BOOT

Not to Scale

REV.	DATE	CK BY

SHEET TITLE: **DETAILS**

PROJECT TITLE: **CONSTRUCTION DOCUMENTATION ASH POND CLOSURE**

CLIENT: **AMES MUNICIPAL ELECTRIC SYSTEM STEAM ELECTRIC PLANT**

200 EAST 5TH STREET AMES, IOWA 50010

SCS ENGINEERS
1690 All-State Court, Suite 100
West Des Moines, IA 50265
PH. (515) 631-6160 FAX. (913) 681-0012

PROJ. NO.	DWN. BY:	CHK. BY:	QA REVIEW BY:	PROJ. MGR
27219356.02	MRK	MRS	MRH	MRS
DSN. BY:	MRK			

CADD FILE: C5.7 DETAILS.DWG

DATE: 10/3/25

DRAWING NO. **C5.7**

G:\PROJECT\27219356.02\AUTOCAD\SHEETS\C5.7 DETAILS.DWG

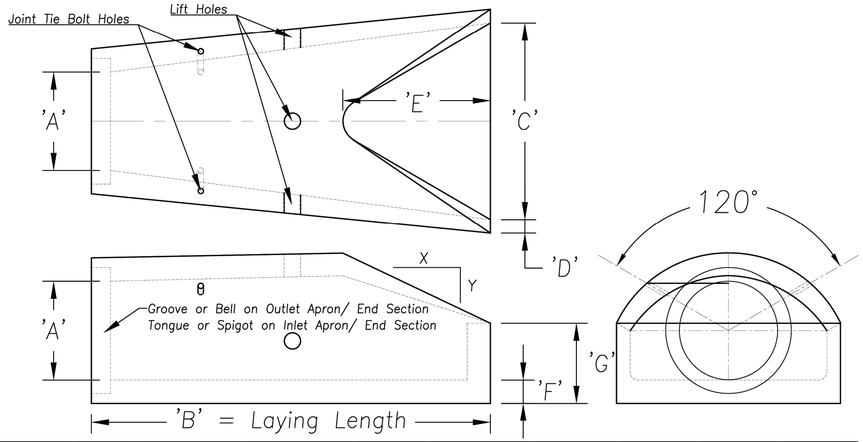

'A' Pipe Diameter (inches)	'B' Lay Length (feet)	'C' Flared/ End Apron Outside Dim. (inches)	'D' Flared End/ Apron Wall (inches)	'E' (inches)	'F' Flared End/ Apron Thickness (inches)	'G' End Wall Height (inches)	Slope (X to Y)	Inlet "Tongue" Product Weight (pounds)	Outlet "Groove" Product Weight (pounds)
12"	6'–1"	24"	2"	24"	3 11/16"	4"	2 : 1	1,300	1,260
15"	6'–1"	30"	2 1/4"	27"	4 5/32"	6"	2.1 : 1	1,830	1,770
18"	6'–1"	36"	2 1/2"	27"	4 1/4"	9"	2.1 : 1	2,260	2,190
24"	6'–1"	48"	3"	43"	4 5/16"	9 1/2"	2.3 : 1	2,820	2,730
30"	6'–1"	60"	3 1/2"	54"	4 5/8"	12"	2.3 : 1	3,645	3,535
36"	8'–1"	72"	4"	63"	4 11/16"	15"	2.4 : 1	6,090	5,950
42"	8'–1"	78"	4 1/2"	63"	5 1/4"	21"	2.4 : 1	8,040	7,830
48"	8'–1"	84"	5"	72"	5"	24"	2.4 : 1	8,770	8,480
54"	8'–2"	90"	6 1/4"	65"	6 1/4"	27"	2 : 1	12,390	12,060
60"	8'–4"	96"	5"	60"	6 3/4"	29 1/2"	1.9 : 1	13,230	12,820
72"	8'–3"	9'	6"	78"	6"	30"	1.5 : 1	16,670	16,070
84"	9'–3 1/2"	10'	6 1/2"	81"	6 1/2"	29 1/2"	1.3 : 1	24,850	24,020

Pipe Apron/ Flared End Section is manufactured in accordance with the applicable ASTM C76 specifications

Midstates Precast Products reserves the right to make changes to product design and/ or dimensions without notice.

MIDSTATES PRECAST PRODUCTS
2340 Hubbell Aveue SW
Bondurant, Iowa 50035
Phone (515) 274-9505

SCALE 1=5	REVISION	BY	DATE
DATE 7/7/21			
DR'N. AS / APVD	JOB NUMBER: .		
CONT: . PROJ: . DESC: MIDSTATES PRECAST PRODUCTS FES/ APRON SUBMITTAL DATA		NUMBER DWG1901 SHT 1 of 1	REV.

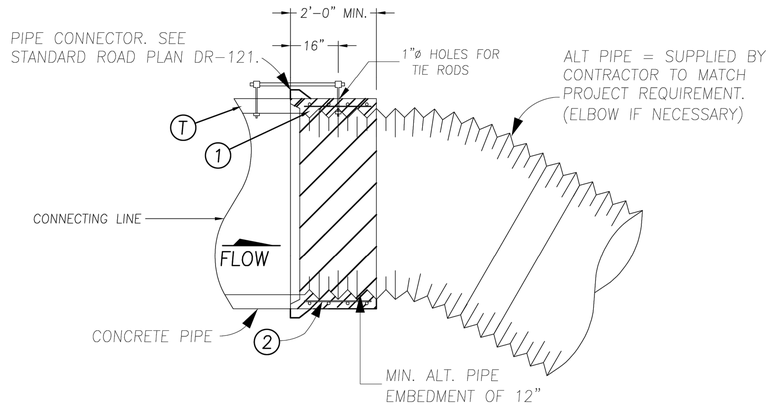

CONCRETE PIPE TO CORRUGATED PIPE TYPE "C–3" FEMALE (ADAPTER)

(1) THICKNESS SAME AS PIPE THICKNESS (T).

(2) WELDED WIRE MESH, OR 'W' WIRE, TO MEET ASTM C76 REINFORCEMENT WITHIN CLOUSURE POUR.

(T) WALL THICKNESS OF CONCRETE PIPE, PER ASTM C76.

NOTES:
1. 28 DAY CONCRETE STRENGTH=4000 PSI (6000 PSI FOR CLASS V)
2. REINFORCING STEEL=ASTM C76 CLASS 3, 4, OR 5 AS REQUIRED.
3. REINFORCING TO BE PLACED IN ACCORDANCE TO C76 SECTION 8.
4. ALL WELDING CONSIDERED NON–STRUCTURAL.
5. NO WELDING ALLOWED ON REINFORCING MESH, ONLY ON ASTM C706 WELDABLE REBAR.

MIDSTATES PRECAST PRODUCTS
THE NEW STANDARD
2340 Hubbell Avenue SW
Bondurant, Iowa 50035
Phone (515) 410-9349
Fax (515) 410-9344

DR–122–C
ADAPTERS

NUMBER DWG–DR–122C–ADAPTERS SHT 1 OF 2 | DATE/ REV. 5/30/24

1 CONCRETE FLARED END SECTIONS
Not to Scale

REV.	DATE	CK BY

SHEET TITLE: DETAILS

PROJECT TITLE: CONSTRUCTION DOCUMENTATION ASH POND CLOSURE

CLIENT: AMES MUNICIPAL ELECTRIC SYSTEM STEAM ELECTRIC PLANT
200 EAST 5TH STREET
AMES, IOWA 50010

SCS ENGINEERS
1690 All-State Court, Suite 100
West Des Moines, IA 50266
PH. (515) 631-6160 FAX: (913) 681-0012

PROJ. NO. 27219356.02	DWN. BY: MRK	CHK. BY: MRS	QA/ KNW BY: MRH	PROJ. MGR: MRS
DSN. BY: MRK				

CADD FILE: C5.8 DETAILS.DWG

DATE: 10/3/25

DRAWING NO. C5.8

G:\PROJECT\27219356.02\AUTOCAD\SHEETS\C5.8 DETAILS.DWG

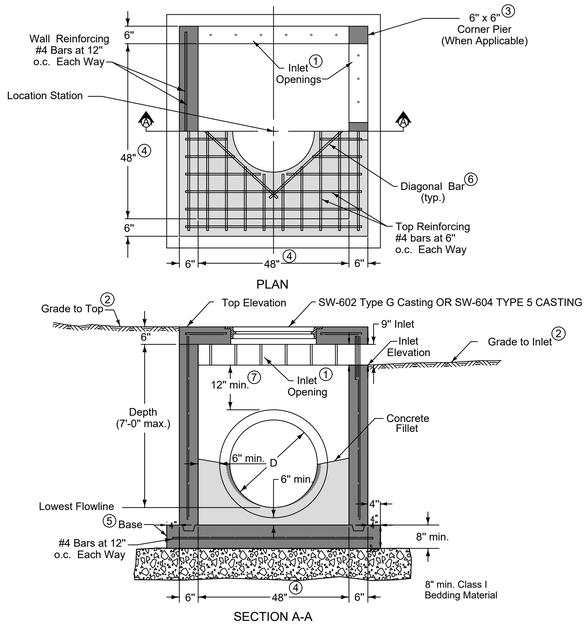

NOTE:

1. SEE DRAWING C4.1 FOR STRUCTURE ELEVATIONS

1 4-OPEN SIDED AREA INTAKE - SUDAS 6010.513
NOT TO SCALE

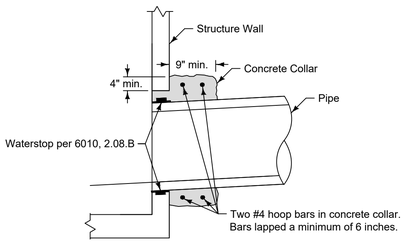

2 STORMWATER PIPE CONNECTIONS
NOT TO SCALE

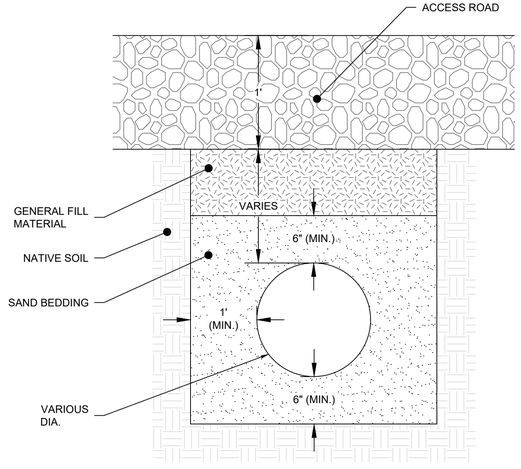

3 STORMWATER CULVERT
Not to Scale

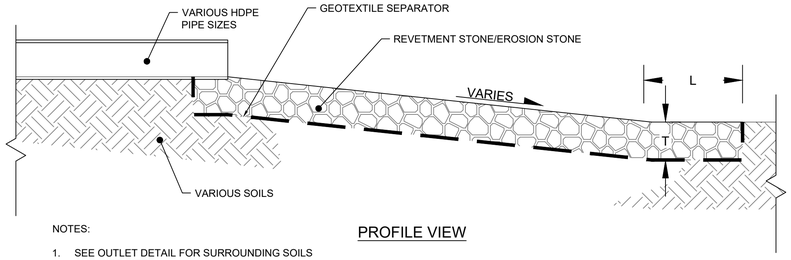

NOTES:

1. SEE OUTLET DETAIL FOR SURROUNDING SOILS AND PIPE SIZES

PROFILE VIEW

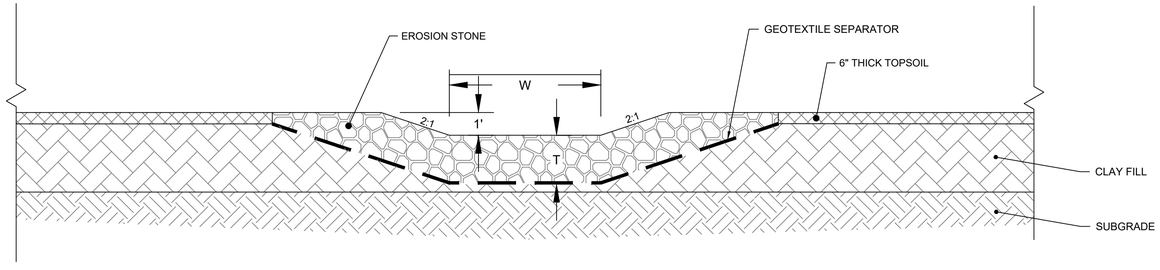

NOTES:

1. TOP OF EROSION STONE FLUSH WITH SURROUNDING GRADES.

SECTION VIEW

ROCK CHUTE	W (FT)	T (IN)	APRON, L (FT)	IDOT RIPRAP CLASSIFICATION
NORTH STORMWATER PIPE	6	18	9	EROSION STONE
SOUTH STORMWATER PIPE	6	18	9	EROSION STONE

4 ROCK CHUTE
Not to Scale

REV.	DATE	CK BY

SHEET TITLE
DETAILS

PROJECT TITLE
CONSTRUCTION DOCUMENTATION
ASH POND CLOSURE

CLIENT
AMES MUNICIPAL ELECTRIC SYSTEM
STEAM ELECTRIC PLANT
200 EAST 5TH STREET
AMES, IOWA 50010

SCS ENGINEERS
1690 All-State Court, Suite 100
West Des Moines, IA 50265
PH. (515) 631-6160 FAX. (913) 681-0012

PROJ. NO.	DSN. BY:	DWN. BY:	CHK. BY:	QA/QC BY:	PROJ. MGR.
27219356.02	MRK	MRK	MRS	MRH	MRS

CADD FILE:
C5.9 DETAILS.DWG

DATE:
10/3/25

DRAWING NO.
C5.9

G:\PROJECT\27219356.02\AUTOCAD\SHEETS\C5.9 DETAILS.DWG

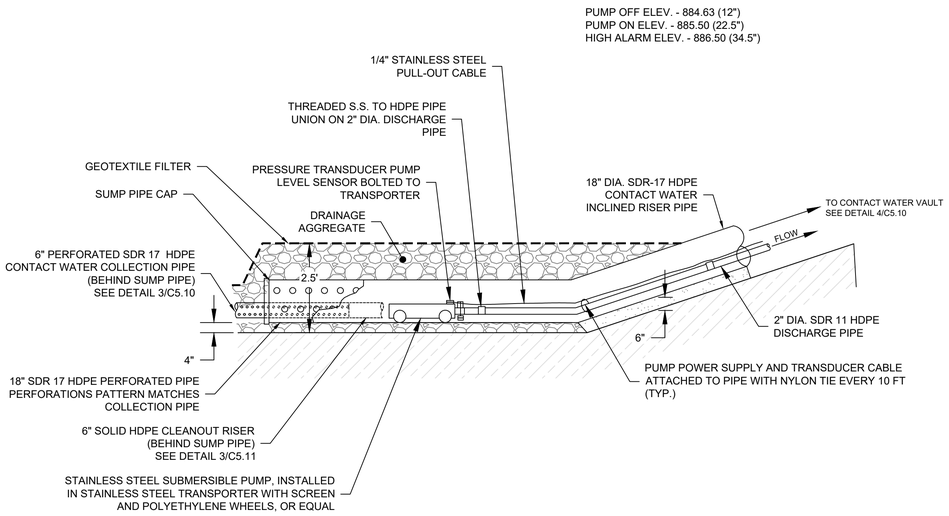

1 ASH CONTACT WATER SUMP PIPE, RISER PIPE, AND PUMPING AREA
Not to Scale

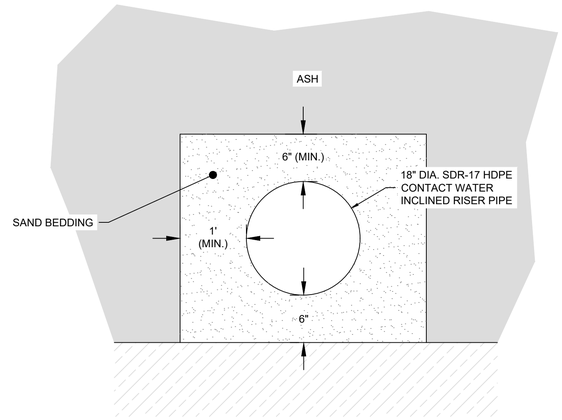

2 ASH CONTACT WATER INCLINED RISER PIPE
Not to Scale

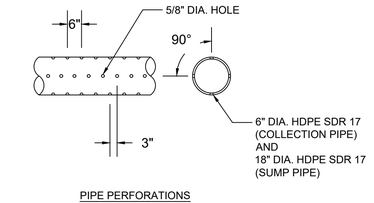

PIPE PERFORATIONS

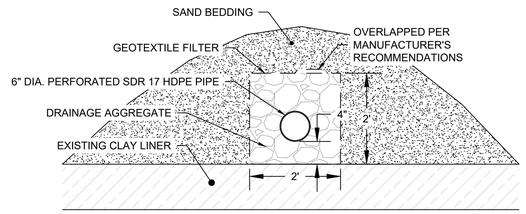

3 ASH CONTACT WATER COLLECTION PIPE
Not to Scale

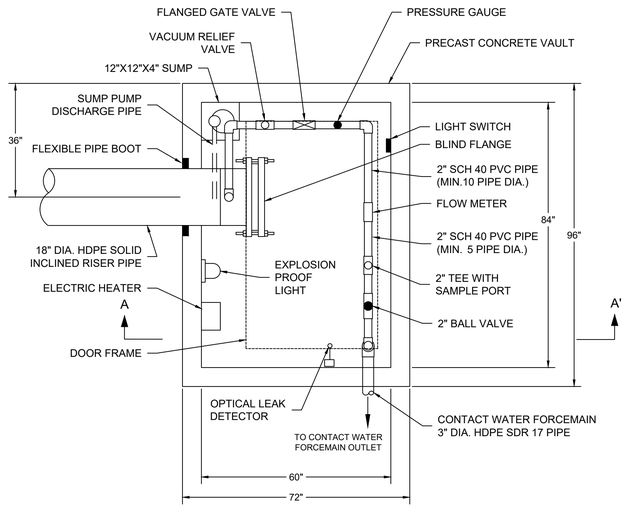

PLAN VIEW

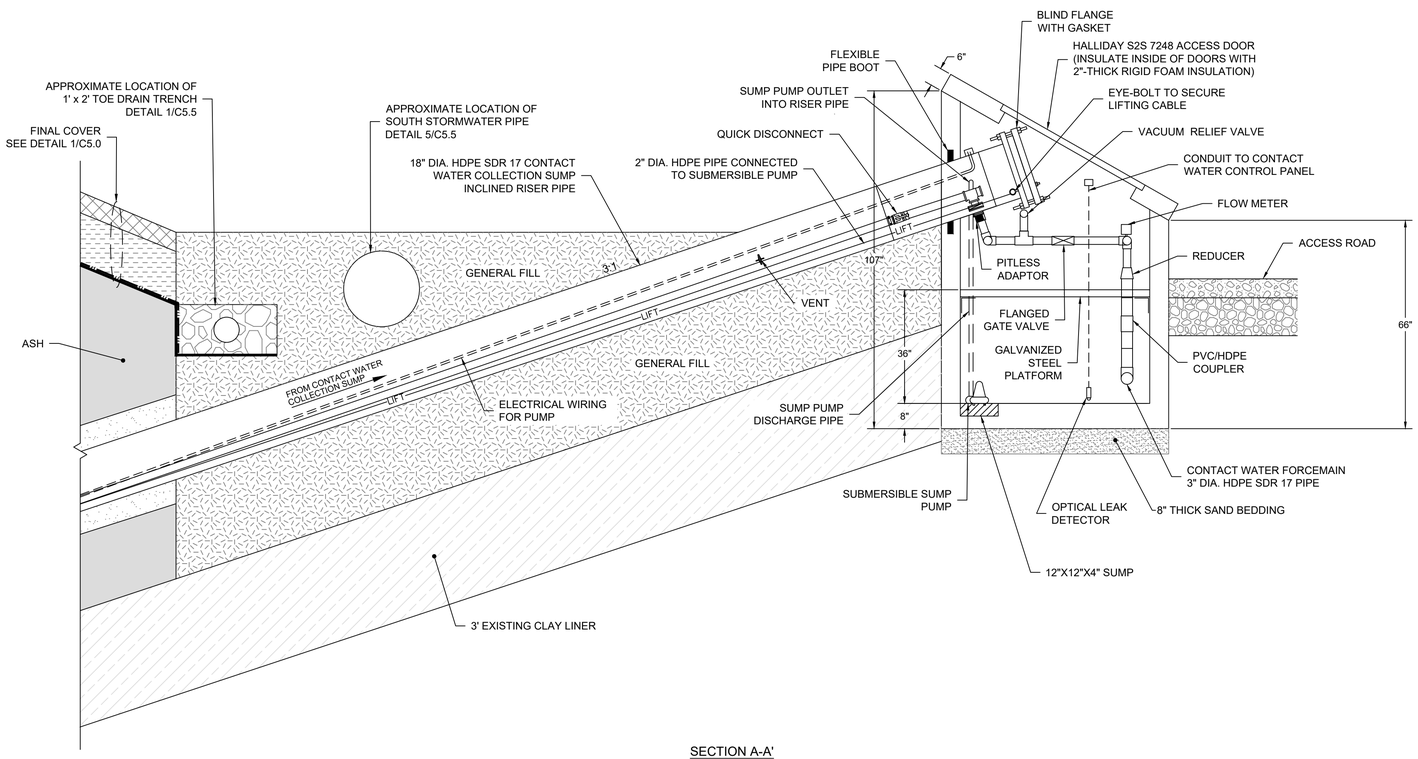

SECTION A-A'

4 RISER PIPE AND ASH CONTACT WATER COLLECTION VAULT
Not to Scale

REV.	DATE	CK BY

SHEET TITLE
DETAILS

PROJECT TITLE
CONSTRUCTION DOCUMENTATION ASH POND CLOSURE

CLIENT
AMES MUNICIPAL ELECTRIC SYSTEM STEAM ELECTRIC PLANT

200 EAST 5TH STREET AMES, IOWA 50010

SCS ENGINEERS
1690 Ali-State Court, Suite 100
West Des Moines, IA 50265
PH. (515) 631-6160 FAX. (913) 681-0012

PROJ. NO.	DSN. BY:	DWN. BY:	CHK. BY:	QA/QC BY:	PROJ. MGR.
27219356.02	MRK	MRK	MRS	MRH	MRS

CADD FILE:
C5.10 DETAILS.DWG

DATE:
10/3/25

DRAWING NO.
C5.10

G:\PROJECT\27219356.02\AUTOCAD\SHEETS\C5.10 DETAILS.DWG

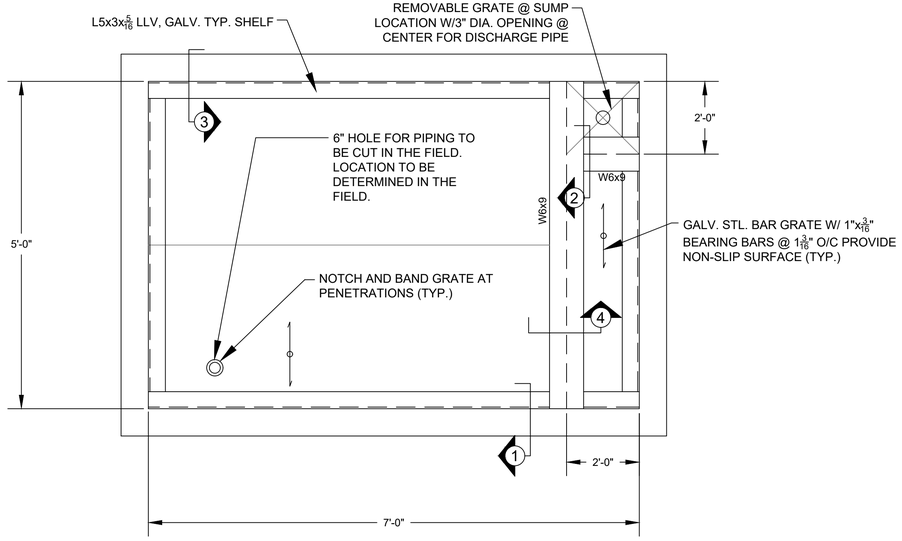

VAULT PLAN VIEW

NOTES:

1. ALL MEMBERS AND FASTENERS HOT-DIP GALVANIZED UNLESS NOTED OTHERWISE.

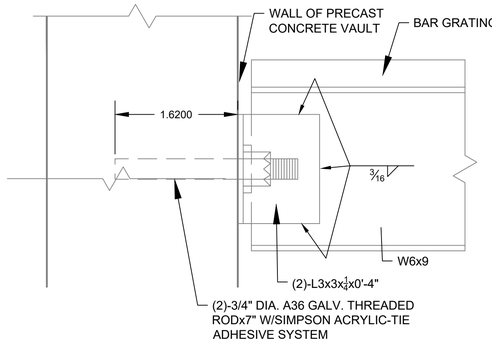

SECTION 1
BEAM/VAULT CONNECTION

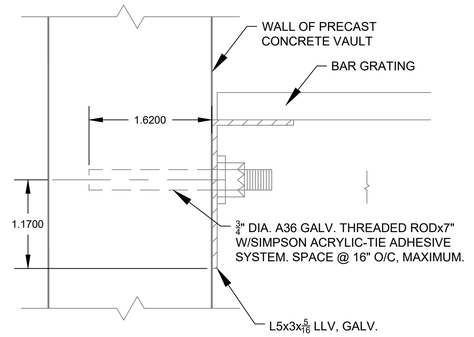

SECTION 3
VAULT/SHELF ANGLE DETAIL

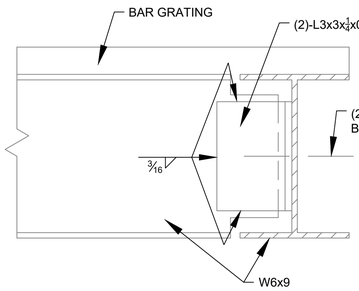

SECTION 2
BEAM/BEAM CONNECTION

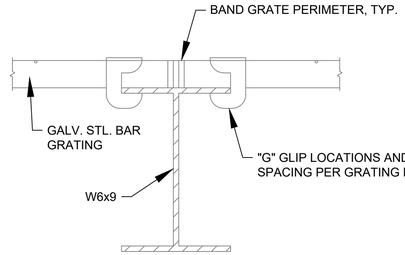

NOTES:

1. DETAIL IS SIMILAR AT SHELF ANGLE LOCATIONS.

SECTION 4
GRATING CONNECTION

1 GALVANIZED STEEL PLATFORM

Not to Scale

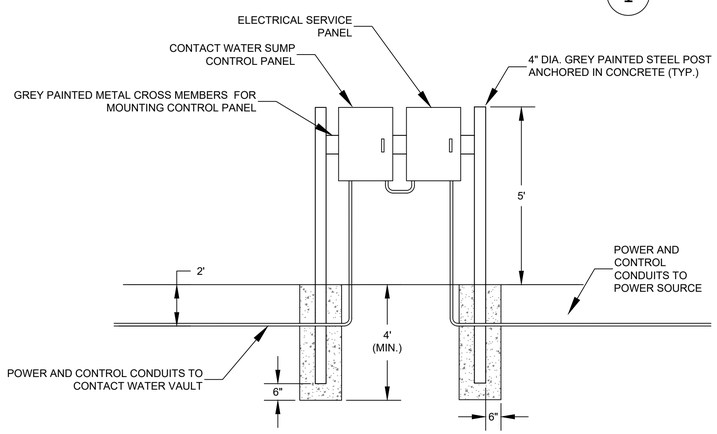

2 ASH CONTACT WATER PUMP CONTROL PANEL

Not to Scale

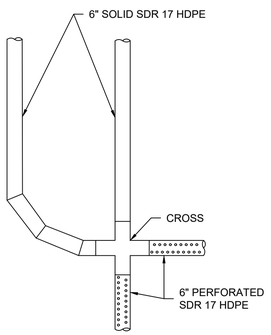

DUAL DIRECTION CLEANOUTS

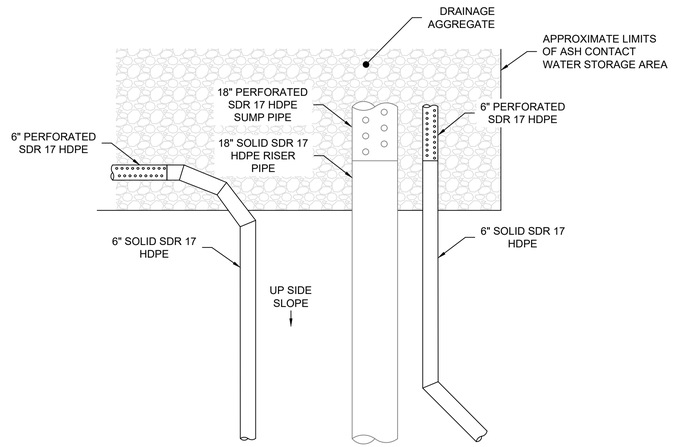

SOUTHEAST COLLECTOR END CLEANOUTS

NOTES:

1. CLEANOUTS EXTENDED 3 FEET ABOVE GRADE AND ENDS THREADED/FLANGED & BOLTED.

3 ASH CONTACT WATER COLLECTION PIPE CLEANOUTS

Not to Scale

G:\PROJECT\27219356.02\AUTOCAD\SHEETS\C5.11 DETAILS.DWG

REV.	DATE	CK. BY

SHEET TITLE: **DETAILS**

PROJECT TITLE: **CONSTRUCTION DOCUMENTATION ASH POND CLOSURE**

CLIENT: **AMES MUNICIPAL ELECTRIC SYSTEM STEAM ELECTRIC PLANT**

200 EAST 5TH STREET AMES, IOWA 50010

SCS ENGINEERS
1690 All-State Court, Suite 100
West Des Moines, IA 50265
PH. (515) 631-6160 FAX. (913) 681-0012

PROJ. NO.	DWN. BY:	CHK. BY:	QUA.KNW.BY:	PROJ. MGR:
27219356.02	MRK	MRS	MRH	MRS
DSN. BY:	MRK			

CADD FILE: C5.11 DETAILS.DWG

DATE: 10/3/25

DRAWING NO.

C5.11

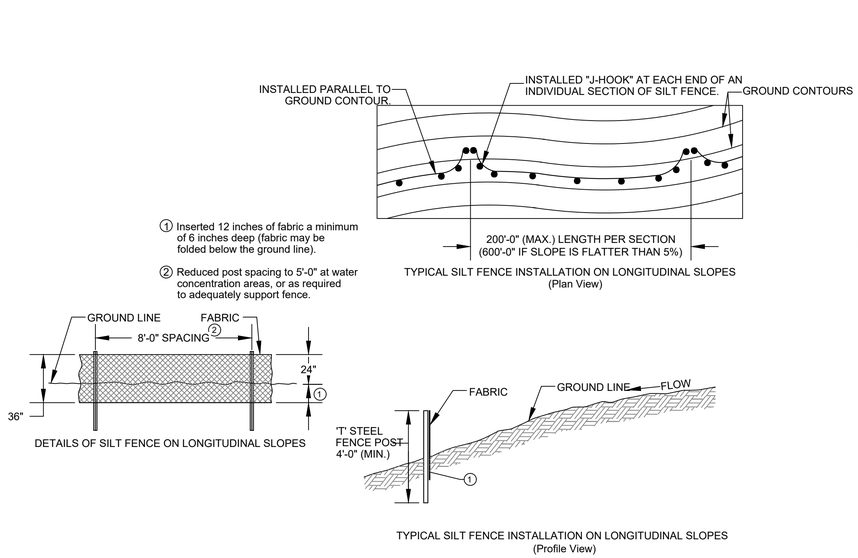

1 SILT FENCE
Not to Scale

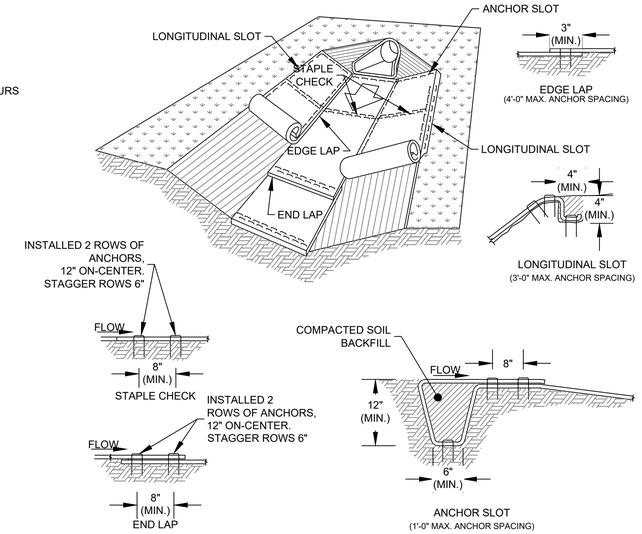

2 CHANNEL EROSION MAT
Not to Scale

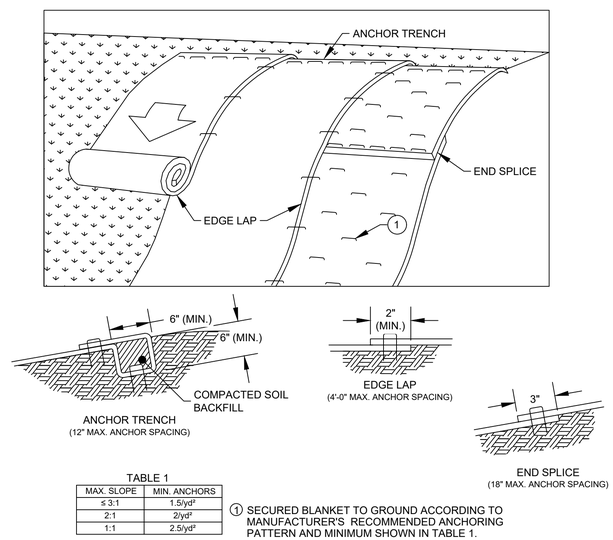

TABLE 1

MAX. SLOPE	MIN. ANCHORS
≤ 3:1	1.5/yd²
2:1	2/yd²
1:1	2.5/yd²

1 SECURED BLANKET TO GROUND ACCORDING TO MANUFACTURER'S RECOMMENDED ANCHORING PATTERN AND MINIMUM SHOWN IN TABLE 1.

3 NON-CHANNEL EROSION MAT
Not to Scale

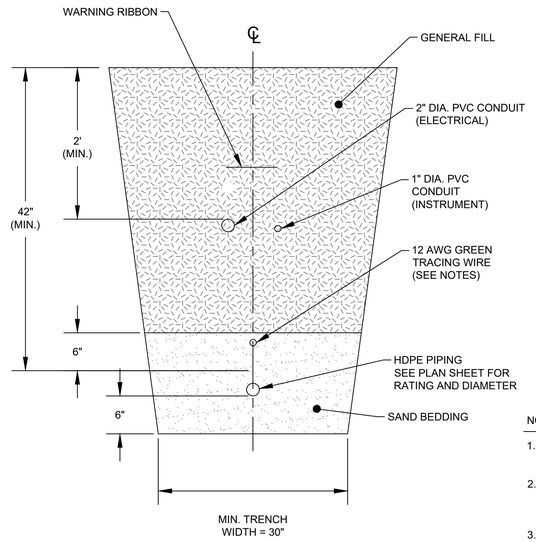

NOTES:

1. INSTALLED TRACING WIRE 3 TO 6 INCHES ABOVE TOP OF PIPE.
2. TERMINATED BOTH ENDS OF TRACING WIRE IN ACCESS BOXES BY CAST IRON & PLASTIC MANUFACTURING & SALES, MUNCY, PA OR APPROVED EQUAL.
3. INSTALLED GROUNDING ROD AT ONE END OF TRACING WIRE PER MANUFACTURER'S INSTRUCTIONS.
4. INSTALLED STYROFOAM INSULATION BOARD AT DEPTHS LESS THAN 42' (NEAR CONTACT WATER COLLECTION VAULT)

4 ASH CONTACT WATER FORCEMAIN TRENCH
Not to Scale

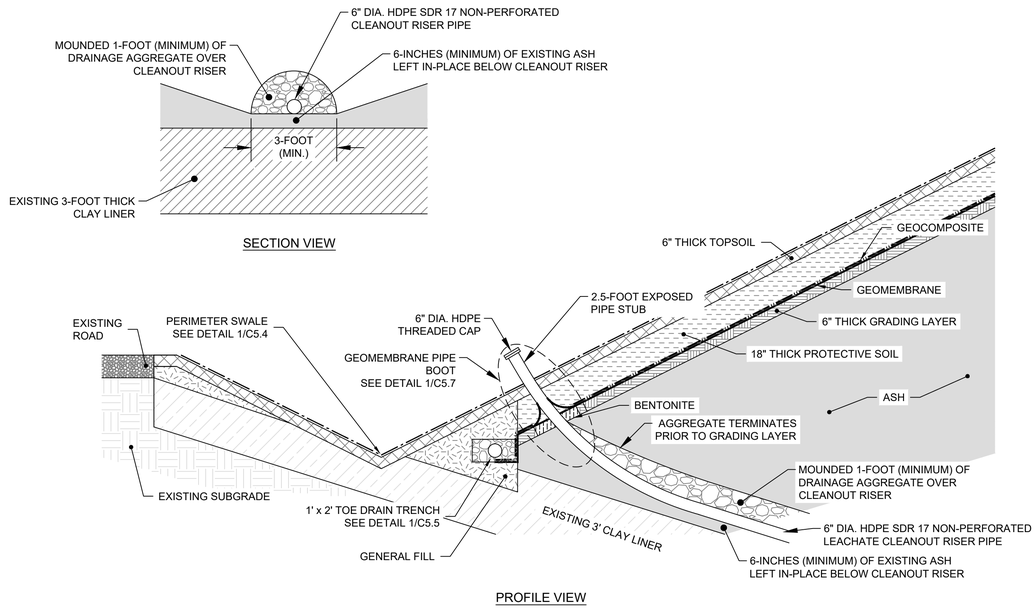

5 ASH CONTACT WATER COLLECTION PIPE CLEANOUT RISER
Not to Scale

G:\PROJECT\27219356.02\AUTOCAD\SHEETS\C5.12 DETAILS.DWG

CK BY | DATE | REV.

SHEET TITLE: **DETAILS**

PROJECT TITLE: **CONSTRUCTION DOCUMENTATION ASH POND CLOSURE**

CLIENT: **AMES MUNICIPAL ELECTRIC SYSTEM STEAM ELECTRIC PLANT**

200 EAST 5TH STREET AMES, IOWA 50010

SCS ENGINEERS
1690 All-State Court, Suite 100
West Des Moines, IA 50265
PH. (515) 631-6160 FAX. (913) 681-0012

PROJ. NO.	27219356.02
DSN. BY:	MRK
DWN. BY:	MRK
CHK. BY:	MRS
QA/QC BY:	MRH
PROJ. MGR:	MRS

CADD FILE: C5.12 DETAILS.DWG

DATE: 10/6/25

DRAWING NO. **C5.12**